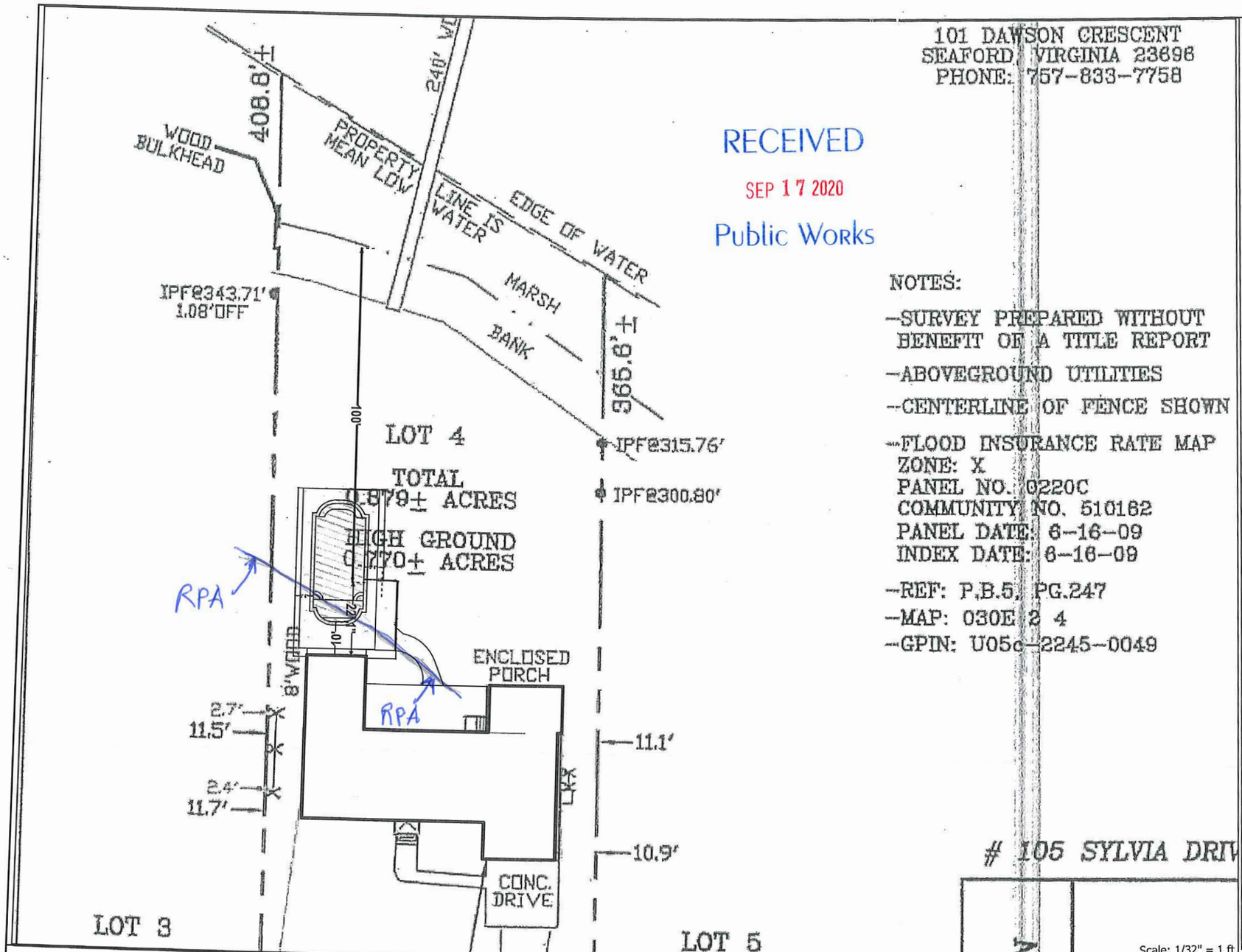


101 DAWSON CRESCENT
SEAFORD, VIRGINIA 23696
PHONE: 757-833-7758

RECEIVED
SEP 17 2020
Public Works

NOTES:

- SURVEY PREPARED WITHOUT BENEFIT OF A TITLE REPORT
- ABOVEGROUND UTILITIES
- CENTERLINE OF FENCE SHOWN
- FLOOD INSURANCE RATE MAP
  ZONE: X
  PANEL NO. 0220C
  COMMUNITY NO. 510162
  PANEL DATE: 6-16-09
  INDEX DATE: 6-16-09
- REF: P.B.5, PG.247
- MAP: 030E 2 4
- GPIN: U05c-2245-0049

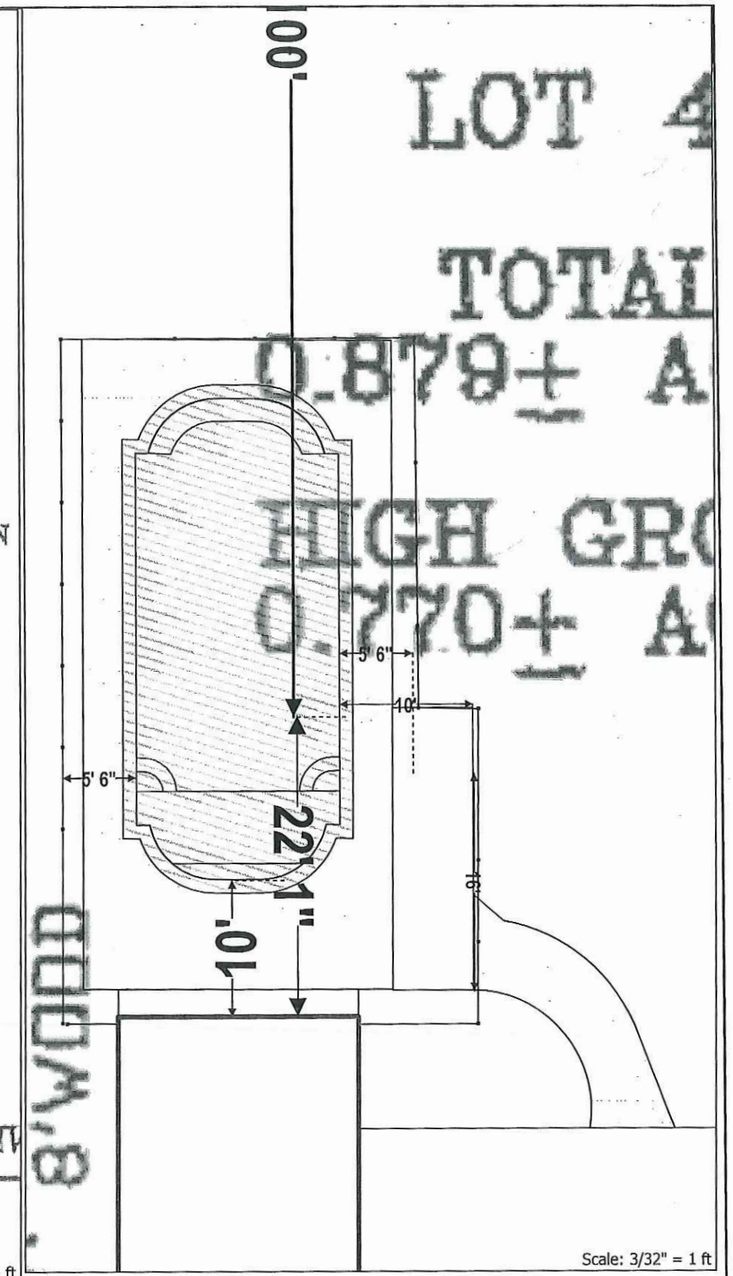


Scale: 1/32" = 1 ft

Scale: 3/32" = 1 ft

River Pools
CATCH THE WAVE

Date:

Project Name: Sutton
Client Name: Cyndi and Jay Sutton
Client Email: chs1231@gmail.com
Client Phone: 757-868-0656
Address: 105 Sylvia Dr.
City: Yorktown
County York Co.
Zip/Postal Code: 23693

Designer: Mike McCormick
Project Manager:

Pool Model: L36
Pool Color:
# of Lights:
Water Features:
Accessories:
Heater:
Fence Material:
Fence Feet:

Cover Style:
Cover Color:
Patio Material: Paver
Patio Sqft Total: 750
Coping Material:
Wall Length and Height:
Wall Material:

I/we (the undersigned) have reviewed this plan and approve it as correct within reasonable tolerance. I/we understand that any changes made to a shape or to a location may delay the project and/or result in additional cost.

X

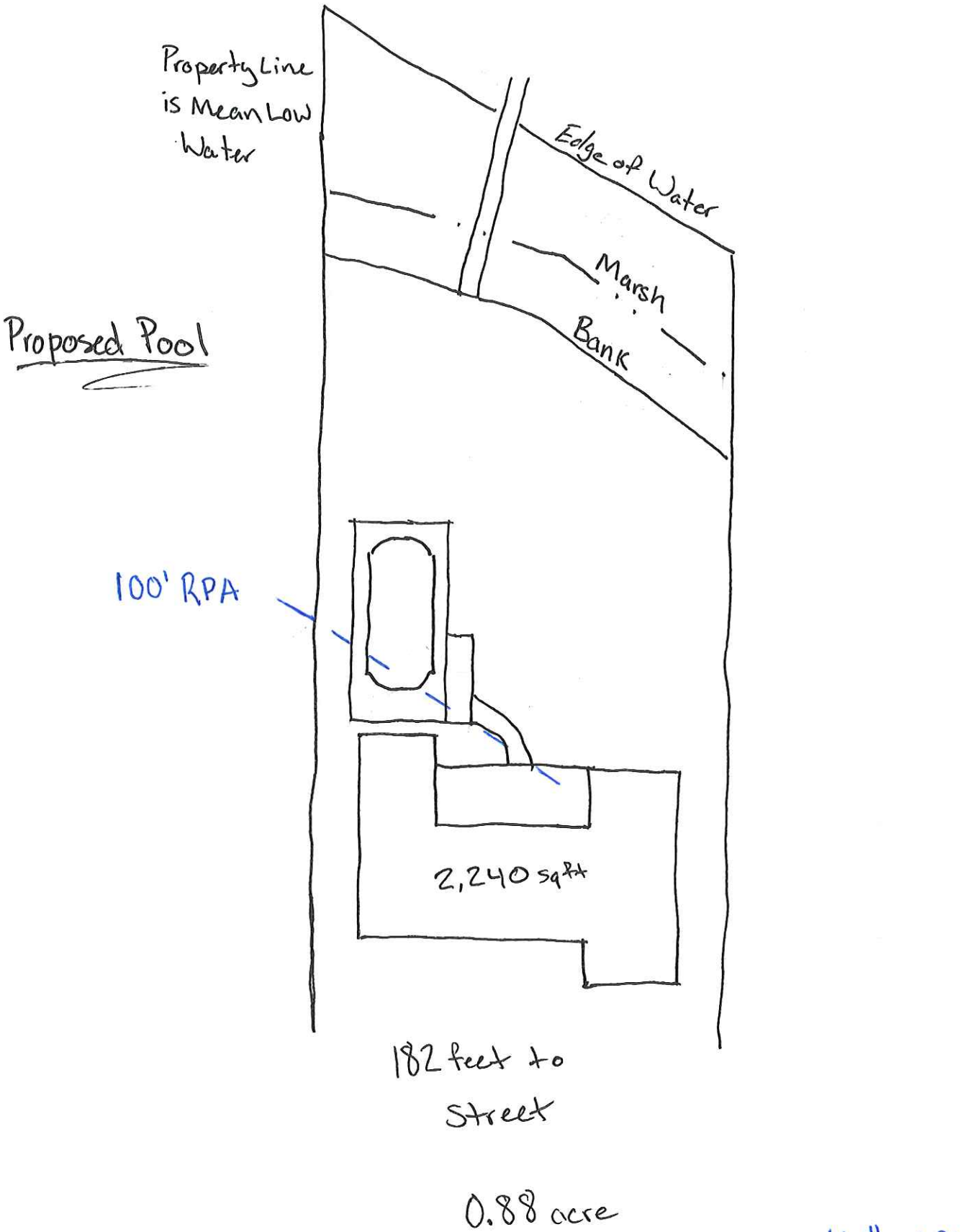
Property Line is Mean Low Water
Edge of Water
Marsh
Bank
Proposed Pool
100' RPA
2,240 sq ft
182 feet to street
0.88 acre
Scale: 1/32" = 1 ft

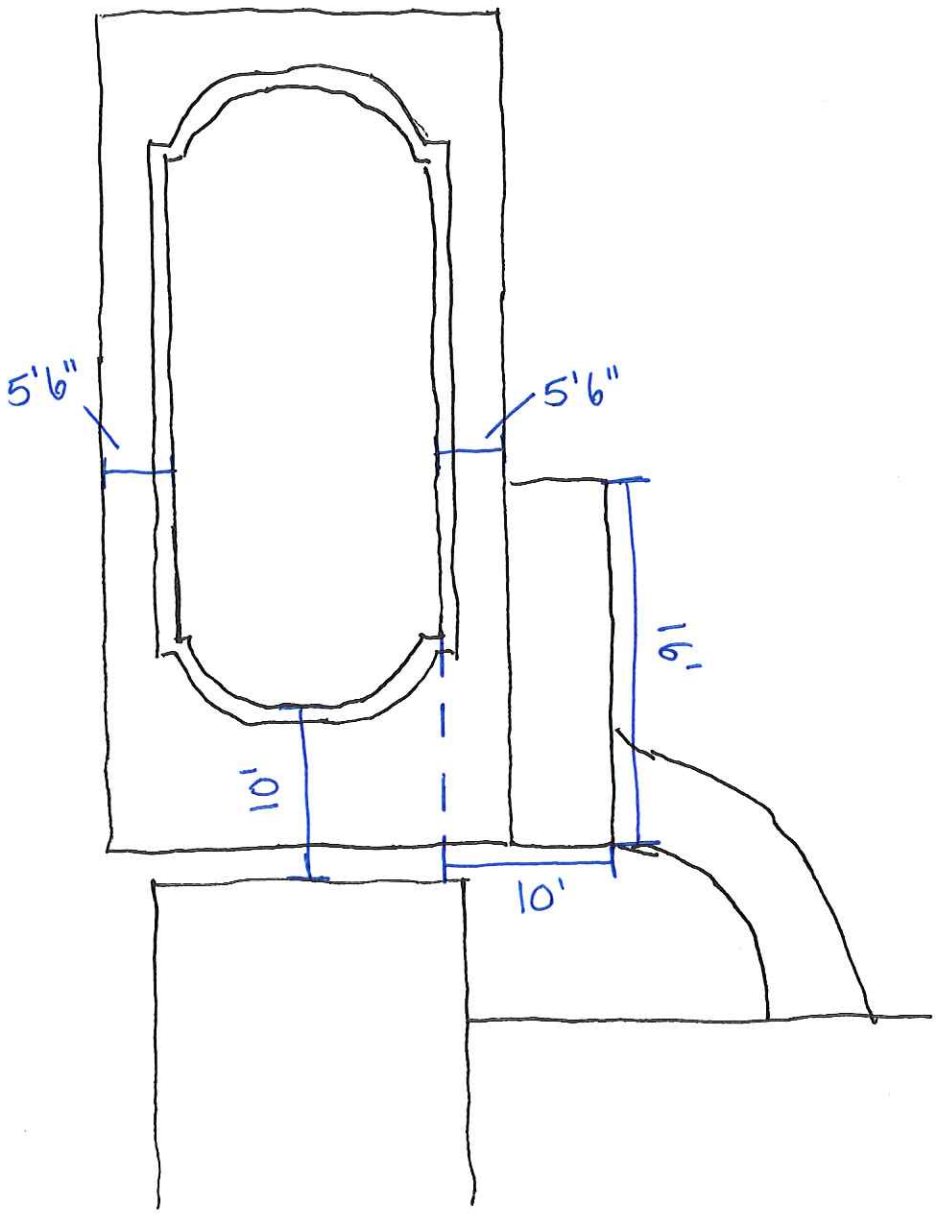


Scale: 3/32" = 1 ft