Department of
Financial & Management Services

York County
VIRGINIA
America's Future Since 1781

Central Purchasing

T. W. Sawyer, CPPO
Purchasing Agent

April 11, 2014

ADDENDUM NO. 1 - TO ALL BIDDERS

Reference - Invitation for Bid **(IFB) No. 1910**

Title: Partial Roof & HVAC System Replacement at Grafton Bethel Elementary School (Phase Three).

Dated: March 18, 2014
Due Date: ~~April 15, 2014 @ 3:30pm.~~
Revised Due Date: April 17, 2014 @3:30pm

All other terms and conditions remain the same.

See attached pages; and drawings, posted on the website.(www.yorkcounty.gov/purchasing)

Note: A signed acknowledgment of this addendum must be received by this office either prior to the due date or attached to your bid. Signature on this addendum does not constitute your signature on the original document. The original document must be signed also.

Sincerely,

Victor Robinson

Victor Robinson Buyer

_____
Name of Firm

_____
Signature/Title

_____
Date

NIGP Member

Email: tsawyer@yorkcounty.gov

120 Alexander Hamilton Blvd. • PO Box 532 • Yorktown, Virginia 23690-0532 • (757) 890-3680
TDD (757) 890-3300
A Hampton Roads Community

Printed on Recycled Paper

ADDENDUM NO. 1

April 9, 2014
Partial HVAC & Roof Replacement at Grafton-Bethel Elementary School
Phase III, York County School Division
IFB #1910

Addendum No. 1 is prepared by:
Hudson + Associates Architects

The following additions, deletions and/or modifications are to be incorporated with the Contract Documents and acknowledgment of receipt of this Addendum shall be noted on the Bid Form submitted.

Pre-Bid Meeting Minutes

Included in and attached to this Addendum are pre-bid meeting minutes, for the meeting held at the Grafton-Bethel Elementary School, at 10:00 a.m. on April 1, 2014, and are hereby made part of the Contract Documents.

Project Manual Changes & Clarifications

DIVISION 00 - PROCUREMENT & CONTRACTING REQUIREMENTS

Item 1 Invitation for Bids IFB #1910: Under Article 1.2, SUMMARY OF SCOPE OF WORK, Paragraph K, REVISE Sub-Item #2 in its entirety to read as follows:

"2. Except as described herein, existing audio-visual systems and equipment, including video and audio signal cabling and equipment connections, including existing ceiling-mounted projectors and wireless transmitters, shall be removed, temporarily stored and reinstalled by others. All ceiling-mounted public address and audio-visual speakers, and ceiling-hung, retractable projection screens will be the responsibility of the General Contractor to demount, store and reinstall." Power and A/V signal outlets for overhead projectors shall remain at ceilings, and shall be reinstalled in ceiling panels by the Contractor."

Item 2 **I**nvitation for Bids IFB #1910: Under Article 2, Contract Time (Page 4 of 48), in Item A, REVISE the second sentence to read as follows: "**The Work shall start no earlier than Monday, June 16, 2014 and all work must be substantially completed by August 15, 2014.**" The first and third sentences of this paragraph remain unchanged.

DIVISION 01 - GENERAL CONDITIONS

Item 3 Specification Section 011000 Summary of Work: Under paragraph titled SCOPE OF WORK, REVISE sub-paragraph 'E' in its entirety to read as follows:

"E. The Owner has previously ordered and obtained five rooftop HVAC units that will be furnished to the Contractor for installation under this Contract. A summary describing these units is included on the Mechanical Drawings. A copy of the approved shop drawings for these units will be furnished to Bidders for their information."

Item 4 Specification Section 011000 Summary of Work: Under paragraph titled SCOPE OF WORK, REVISE sub-paragraph 'K,' Item #2 in its entirety to read as follows:

"2. Except as described herein, existing audio-visual systems and equipment, including video and audio signal cabling and equipment connections, including existing ceiling-mounted projectors and wireless transmitters, shall be removed, temporarily stored and reinstalled by others. All ceiling-mounted public address and audio-visual speakers, and ceiling-hung, retractable projection screens will be the responsibility of the General Contractor to demount, store and reinstall." Power and A/V signal outlets for overhead projectors shall remain at ceilings, and shall be reinstalled in ceiling panels by the Contractor."

Item 5 Specification Section 012300 Alternates: Under Para. 1.3, Definitions, Paragraph 'A,' Alternate: Following Sub-Item #1 at the end of this section, ADD the following item:

"2. For Bidding purposes, the Alternate(s) are to be calculated and stipulated on the Bid Form as cost of work separate from the Base Bid. Work described under the Alternate(s) is not to be included in the Base Bid price."

Item 6 Specification Section 012300 Alternates: Under Para. 1.4, Procedures, Paragraph 'E,' Exact Limits of Work: After the first sentence, ADD the following sub-items:

"1. The areas of work pertaining to Alternates #1 and #2 are shown on Architectural Drawings A1.05, A2.01, A2.05 and A2.08. Note that the same areas will be subject to delimiting work under the Alternates on respective mechanical and electrical drawings even though the limits are not specifically called out on the mechanical and electrical drawings.

2. Notes on Drawings A1.05, A2.01, A2.05 and A2.08 also clarify specific attributes of work included under Alternates as well as work to be included under Base Bid. The following stipulations also clarify which

work is included under the Alternates, and which is included under Base Bid:

a. All work associated with RTU-1 and replacement of HVAC in Area D2 (Cafeteria and State) is to be included under Alternates #1 and #2. This will include delivering and setting the rooftop HVAC unit and placement of rooftop-mounted ducts serving Area D2.
b. Structural modifications, roof demolition and new curb construction associated with RTU-1 will be included under the Base Bid. Roof replacement in the immediate vicinity of RTU-1 will be included under Base Bid. The roof curb has already been acquired by the Owner and will be furnished for installation by the General Contractor under Base Bid. In lieu of setting RTU-1 under Base Bid, the General Contractor shall construct a temporary weather deck on top of, and secured to, the curb, protected by one layer of 60-mill EPDM membrane roofing that is to be wrapped over and tension-banded in place. This will keep the roof curb weathertight until the following Summer 2015 when work related to Alternate #2 and setting RTU-1 is performed. If Alternate #1 is accepted, the temporary weather deck above RTU-1's curb will not be required.
c. Replacement of the refrigeration systems for the kitchen walk-in cooler and freezer shall be included under Base Bid.
d. All work associated with the Stage Curtains shall be included under the Alternates."

Item 7 Specification Section 012300 Alternates: Under Para. 1.4, Procedures, Sub-Paragraph 'F', Special Stipulation for Alternate Work Phased by Summer of Completion: REVISE the wording under this paragraph as follows:

"Note that, under Alternate #2, for the existing HVAC systems that remain in place until Summer of 2015, i.e., at the Kitchen and Cafeteria, then pricing of the work shall include leaving any existing HVAC systems serving these areas, such as chiller, boiler, ductwork, piping, pumps diffusers, controls, electrical power thereto, and related components in place for such systems to continue in operation until their replacement in Summer 2015. Demolition of this area's existing HVAC systems should be included with pricing of Alternates #1 and #2. If Alternate #1 is accepted, demolition of these systems will proceed during Summer of 2014. If Alternate #2 is accepted, demolition of these systems will be performed during Summer of 2015."

Item 8 ADD Division 01 Specification Section 017419 "Construction Waste Management and Disposal," appended herewith. Include listing of this

section in the Project Manual Table of Contents.

DIVISION 07 - THERMAL & MOISTURE PROTECTION

Item 9 ADD Division 07 Specification Section 070150.19, "Preparation for Re-Roofing," appended herewith. Include listing of this section in the Project Manual Table of Contents.

Item 10 Under Division 07 Specification Section 077200 "Roof Accessories," Para. 2.5 Prefabricated Pipe, Line and Ductwork Supports and Flashing, following Sub-Item 'E,' "Stacked Ductwork Support Assemblies," RE-LABEL the next sub-item as 'F,' "Single Ductwork Support."

Following aforementioned Sub-Item 'F,' ADD the following sub-item:

"G. HVAC Unit Condensate Piping Supports: MIRO Industries, Inc. Model No. 1.5 "Pillowblock," manufactured from polycarbonate. Condensate piping rests in U-shaped cradle up to 1-1/2 inches in diameter. Provide proprietary stainless steel pipe strap and fasteners to secure the pipe in place into the support. Locate where indicated on drawings."

DIVISION 23 - HEATING, VENTILATING, AND AIR CONDITIONING

Item 11 Under Division 23 Specification Section 230500 "Heating, Ventilating, Air Conditioning," Para. 1.4 PROTECTION OF EQUIPMENT AND MATERIAL, Item 'B,' REVISE Sub-Item #3 to read as follows: "Rooftop Units RTU-3, RTU-4, RVU-5, RVU-6, RTU-7 are Owner provided and Contractor installed. Contractor shall receive these units at the York County School Division Warehouse, transport these units to the site of installation, and protect the units from any damages. The York County School Division Maintenance Department warehouse is located at 505 Cook Road, Yorktown, Virginia 23690."

Item 12 Under Division 23 Specification Section 230500 "Heating, Ventilating, Air Conditioning," Para. 2.3, "Air Handling Equipment," REVISE Paragraph 'A' thereunder to read as follows: "Rooftop Air Handling Units (RTU-1, RTU-2, RTU-3, RVU-3, RVU-4): (All Rooftop Air Handling Units are Owner furnished and Contractor installed)."

Item 13 Under Division 23 Specification Section 230500 "Heating, Ventilating, Air Conditioning," Para. 2.3.A, at the end of Sub-Item #1, Rooftop Air Handling Units, ADD the following sentence: "Bidders will be furnished a copy of the approved Pre-Purchased Equipment Submittal Package associated with these units for informational purposes."

At the end of Division 23 Specification Section 230500 "Heating, Ventilating, Air Conditioning," ADD the "Owner-Furnished/Contractor-Installed Rooftop Air Handling Units Shop Drawings" Appendix, issued herewith as an attachment to this Addendum. This Appendix is the Pre-Purchased Equipment Submittal Package referred to in the paragraph above.

In order to clarify a discrepancy between the construction documents prepared by Thompson Consulting Engineers and the Pre-Purchased Equipment Submittal Package by Engineered Air, please note the following:

- RTU-1 on TCE's drawings is referenced as RTU-3 in the Pre-Purchased Equipment Submittal Package (Supply = 5,900 CFM/7.5 HP).
- RTU-2 on TCE's drawings is referenced as RTU-4 in the Pre-Purchased Equipment Submittal Package (Supply = 1,700 CFM/1.5 HP).
- RTU-3 on TCE's drawings is referenced as RTU-7 in the Pre-Purchased Equipment Submittal Package (Supply = 5,300 CFM/5.0 HP).
- RVU-3 on TCE's drawings is referenced as RVU-5 in the Pre-Purchased Equipment Submittal Package (Supply = 3,485 CFM/5.0 HP).
- RVU-4 on TCE's drawings is referenced as RVU-6 in the Pre-Purchased Equipment Submittal Package (Supply = 3,570 CFM/5.0 HP).

Item 14 Under Division 23 Specification Section 230500 "Heating, Ventilating, Air Conditioning," Para. 2.8.A Vibration Isolators (RTUs and RVUs), following the first sentence, which reads, "Mechanical equipment indicated below….resilient vibration and noise isolations," INSERT the following sentence: "All vibration and noise isolation components are not included with the pre-purchased rooftop HVAC units or curbs, and shall be provided by the General Contractor."

Revisions to the Drawings

Item 15 REVISE Architectural Drawing A1.05 DEMOLITION ROOF PLAN AREAS "C" & "D2" & DETAILS according to Revision dated 4/9/2014 to clarify area and aspects of work to be included under Alternates #1 and #2.

Item 16 REVISE Architectural Drawing A2.01 FLOOR PLAN AREAS "C" & "D2" DETAILS according to Revision dated 4/9/2014 to clarify area and aspects of work to be included under Alternates #1 and #2.

Item 17 REVISE Architectural Drawing A2.05 ROOF PLAN AREAS "C" & "D2" DETAILS

according to Revisions dated 4/9/2014. These revisions include condensate piping added to roof plan and add a typical detail of how condensate piping is to be supported. These revisions also clarify area and aspects of work to be included under Alternates #1 and #2.

Item 18 REVISE Architectural Drawing A2.06 ROOF PLAN AREA "E" & DETAILS according to Revision dated 4/9/2014 to include condensate piping added to roof plan.

Item 19 REVISE Architectural Drawing A2.07 ROOF PLAN AREA "F" & "G" & DETAILS according to Revision dated 4/9/2014 to include condensate piping added to roof plan.

Item 20 REVISE Architectural Drawing A8.01 REFLECTED CEILING PLAN AREA "C" & "D2" & DETAILS according to Revision dated 4/9/2014 to clarify area and aspects of work to be included under Alternates #1 and #2.

Item 21 REVISE Mechanical Drawing M2.05 ROOF PLAN according to Revision dated 4/9/2014 to include heat exchanger condensate piping layout added to roof plan and New Work Note #6 pertaining thereto.

Attachments:

Pre-Bid Meeting Minutes, April 1, 2014
Specification Section 17419 "Construction Waste Management and Disposal"
Specification Section 070150.19, "Preparation for Re-Roofing"
Appendix to Specification Section 230500 "Heating, Ventilating, Air Conditioning:" Owner-Furnished/Contractor-Installed Rooftop Air Handling Units Shop Drawings.
Revised/Reissued Drawings:
- A1.05 - DEMOLITION ROOF PLAN AREAS "C" & "D2" & DETAILS
- A2.01 - FLOOR PLAN AREAS "C" & "D2" DETAILS
- A2.05 - ROOF PLAN AREAS "C" & "D2" DETAILS
- A2.06 - ROOF PLAN AREA "E" & DETAILS
- A2.07 - ROOF PLAN AREA "F" & "G" & DETAILS
- A8.01 - REFLECTED CEILING PLAN AREA "C" & "D2" & DETAILS
- M2.05 - ROOF PLAN (MECHANICAL)

End of Addendum No. 1

HUDSON + ASSOCIATES
ARCHITECTS

Richard S. Corner, AIA, Senior Partner
Keith Mushenski, AIAA, Partner

C. Craig Hudson, AIA, Senior Partner Emeritus

MEETING MINUTES

Date: April 1, 2014
By: Richard S. Corner, AIA, CSI
Project Name: **Grafton-Bethel E.S. Partial Roof & HVAC System Replacement, Phase III York County School Division**
Project No.: **IFB No. 1910**
Re: **Pre-Bid Meeting Minutes**

The purpose of this meeting was to review the scope of the project and address questions from prospective bidders. The following items were discussed:

1. Bids are due Tuesday, April 15, 2014 at 3:30 PM local time in the Central Purchasing Department, County of York, VA, 120 Alexander Hamilton Blvd., Second Floor, Yorktown, Virginia 23690.

2. The project will commence with the Owner's written "Notice to Proceed" and shall achieve substantial completion no later than August 15, 2014. Final completion shall be achieved no later than September 25, 2014.

3. Liquidated damages will be assessed at the rate of $200 for every calendar day after August 15, 2014 that the project has not reach Substantial completion. Should substantial completion not be attained until after September 15, 2014 the liquidated damages shall be increased to $400 per calendar day. Assuming Substantial Completion is achieved before September 15, 2014 but not Final Completion, liquidated damages shall be assessed at the rate of $200 per calendar day until final completion is achieved.

4. There are a total of four (4) allowances identified in the IFB and listed in Spec Section 012100. There are unit prices related to each of the four (4) Allowances listed in the IFB, Bid Schedule and Spec Section 012200. Bidders are admonished to review and complete the Bid Form carefully and completely so as not to be considered unresponsive.

5. There are scheduled Bid Alternates in the Bid, described under Spec Section 012300. The two alternated are identical in scope; however, Alternate #1 defines the alternate work to be completed by August 15, 2014. Alternate #2 describes the alternate work to be completed during a period from June 15 to August 14, 2015.

6. The Project consists of replacing approximately 48,900 SF existing, unballasted, adhered EPDM roof system with a new 2-ply modified roof system over the tapered insulation over an existing metal or gypsum deck at portions of the school. Sheet metal roofing, flashings and drainage items are also included. The Project also

consists of replacing existing HVAC systems throughout portions of the school. Incidental to the work is replacement of existing ceilings and lighting systems throughout areas impacted by HVAC system replacement. Work also includes limited replacement of plumbing piping and fixtures, sinks and casework. Patching of interior and exterior surfaces impacted by roof and HVAC system replacement Incidental interior renovations include prepping and painting walls, interior partition construction, door demolition and new door installation, new interior soffit construction, replacement of the kitchen walk-in cooler and freezer refrigeration systems, careful removal, cleaning and reinstallation of existing stage curtains and other minor, related aspects of work.

7. This project continues work begun and accomplished over the previous two summers, during which some portions of the school have already been re-roofed and received new HVAC systems. Design for the new roofing and HVAC systems under Phase III continues with the same types of construction accomplished under earlier phases.

8. The existing HVAC system to be demolished utilizes a hydronic-based boiler plant coupled with rooftop-mounted packaged air-conditioning units. Demolition includes removing all equipment, ductwork, piping, controls and related components.

9. Upgrades enhancements to existing roof structure at locations designated to receive new rooftop HVAC units and equipment.

10. The portion of roof to be replaced at Area 'B' is over a segment of the school already retrofitted with replacement HVAC. Recently-installed rooftop equipment in this area was configured to allow the roof to be replaced without removing or disconnecting the equipment.

11. Existing ceiling demolition and rework is contemplated to access existing components to be demolished. Total ceiling and lighting demolition is required throughout the areas to receive new HVAC. New ceilings and lighting are contemplated that will utilize energy-efficient LED light fixtures.

12. Five (5) rooftop "Engineered Air" units have been pre-ordered by the YCSD and have already been received at the YCSD warehouse. The GC is responsible for transporting these units to the site for installation. The rooftop equipment curbs were also included in this order, and must also be transported to the site by the GC. The General Contractor will owe no state sales tax on the HVAC units or curbs as these have been procured by the YCSD.

13. Natural gas service to the building will be maintained for new HVAC systems. New rooftop units will be direct-fired. Work includes extending new gas piping to the rooftop units.

14. Bidders were advised of specific qualification submittal requirements associated with bidding on this contact, specifically as applies to general experience as well

as installing Mitsubishi Electric City-Multi VRFZ heat pump systems, addressed under Article 35 of the IFB. Third-party references are explicitly required. The Contractor is responsible for engaging the HVAC equipment manufacturers' representatives for field start-up of equipment.

15. Coordination with YCSD's third party contractor is required for the schools energy monitoring and control system. The GC shall provide HVAC controls with Individual systems components and equipment as indicated in the drawings and specs.

16. Other incidental aspects of work included in the scope were mentioned.

17. Responsibility for handling and storage of movable furniture prior to and following the work was discussed. Except for items specifically identified as the responsibility of the Contractor, the YCSD will be responsible for moving and storing all interior furniture, fixtures and equipment. The GC will be responsible for protecting and working around items stored inside the Gymnasium and Cafeteria.

18. Bidders are required, at minimum, to submit completed Pages 30 to 37 of the IFB plus required Bid Guarantee described under Article 16 of the IFB. Bidders were admonished to pay careful attention to the detailed requirements in the IFB and specifications, as well acknowledging of addendae, so as not to be considered unresponsive.

19. Aspects of work related to existing ceiling projectors and projection screens in the classrooms will be clarified by forthcoming addendum.

20. Bidders are encouraged to be imaginative about prosecution of the work in order to finish on time. **Time is of the essence under this Contract.** The Owner has clear and unambiguous expectations that the school be ready to open to students in September – and that the GC must finish on time by August 15, 2014. The YCSD and design team will support meeting this objective.

21. Bidders were permitted access to the roof and to view areas inside the building, including the Cafeteria, the Gymnasium and selected classrooms in Areas 'C' and 'E.' While on the roof, we identified the small area of existing metal roof near the Cafeteria to be replaced with new SSMR.

The foregoing is Hudson + Associates Architects' record of this meeting. Please forward any additions, amplifications, changes or exceptions to H+A at 120 W. Queens Way, Suite 201, Hampton, VA 23669, for incorporation in the permanent project record.

Respectfully Submitted,

Hudson + Associates Architects
Richard S. Corner, AIA, CSI

SECTION 017419 - CONSTRUCTION WASTE MANAGEMENT AND DISPOSAL

PART 1 - GENERAL

1.1 RELATED DOCUMENTS

A. Drawings and general provisions of the Contract, including General and Supplementary Conditions and other Division 01 Specification Sections, apply to this Section.

1.2 SUMMARY

A. Section includes administrative and procedural requirements for the following:

1. Salvaging nonhazardous demolition and construction waste.
2. Recycling nonhazardous demolition and construction waste.
3. Disposing of nonhazardous demolition and construction waste.

B. Related Requirements:

1. Section 024119 "Selective Demolition" for disposition of waste resulting from partial demolition of buildings, structures, and site improvements.
2. Section 042000 "Unit Masonry" for disposal requirements for masonry waste.

1.3 DEFINITIONS

A. Construction Waste: Building and site improvement materials and other solid waste resulting from construction, remodeling, renovation, or repair operations. Construction waste includes packaging.

B. Demolition Waste: Building and site improvement materials resulting from demolition or selective demolition operations.

C. Disposal: Removal off-site of demolition and construction waste and subsequent sale, recycling, reuse, or deposit in landfill or incinerator acceptable to authorities having jurisdiction.

D. Recycle: Recovery of demolition or construction waste for subsequent processing in preparation for reuse.

E. Salvage: Recovery of demolition or construction waste and subsequent sale or reuse in another facility.

F. Salvage and Reuse: Recovery of demolition or construction waste and subsequent incorporation into the Work.

1.4 PERFORMANCE REQUIREMENTS

A. General: The Owner has identified recycling and minimizing of landfill-destined waste as a goal of this project. This project is not to be LEED-certified; however, the Owner expects the Contractor to recycle and minimize landfill waste to the greatest practical extent. The Owner wishes to demonstrate efficient recycling and waste reduction methods as an educational experience for the local community and the School system. Practice efficient waste management in the use of materials in the course of the Work. Use all reasonable means to divert construction and demolition waste from landfills and incinerators. Facilitate recycling and salvage of materials, including the following:

1. Demolition Waste:

a. Concrete.
b. Brick.
c. Concrete masonry units.
d. Roofing.
e. Insulation.
f. Gypsum board.
g. Acoustical ceiling panels and suspension grid.
h. Equipment.
i. Cabinets.
j. Piping.
k. Supports and hangers.
l. Valves.
m. Mechanical equipment.
n. Refrigerants.
o. Electrical conduit.
p. Copper wiring.
q. Lighting fixtures.
r. Lamps.
s. Ballasts.
t. Electrical devices.
u. Panelboards.

2. Construction Waste:

a. Masonry and CMU.
b. Lumber.
c. Wood sheet materials.
d. Wood trim.
e. Metals.
f. Roofing.

g. Insulation.
h. Gypsum board.
i. Piping.
j. Electrical conduit.
k. Packaging: Regardless of salvage/recycle goal indicated in "General" Paragraph above, salvage or recycle 100 percent of the following uncontaminated packaging materials:

1) Paper.
2) Cardboard.
3) Boxes.
4) Plastic sheet and film.
5) Polystyrene packaging.
6) Wood crates.
7) Plastic pails.

1.5 ACTION SUBMITTALS

A. Waste Management Plan: Submit plan within 14 days of date established for the Notice of Award.

1.6 INFORMATIONAL SUBMITTALS

A. Recycling and Processing Facility Records: Indicate receipt and acceptance of recyclable waste by recycling and processing facilities licensed to accept them. Include manifests, weight tickets, receipts, and invoices.

B. Landfill and Incinerator Disposal Records: Indicate receipt and acceptance of waste by landfills and incinerator facilities licensed to accept them. Include manifests, weight tickets, receipts, and invoices.

C. Statement of Refrigerant Recovery: Signed by refrigerant recovery technician responsible for recovering refrigerant, stating that all refrigerant that was present was recovered and that recovery was performed according to EPA regulations. Include name and address of technician and date refrigerant was recovered.

1.7 QUALITY ASSURANCE

A. Refrigerant Recovery Technician Qualifications: Certified by EPA-approved certification program.

B. Regulatory Requirements: Comply with hauling and disposal regulations of authorities having jurisdiction.

1.8 WASTE MANAGEMENT PLAN

A. General: Develop a waste management plan according to ASTM E 1609 and requirements in this Section. Plan shall consist of waste identification and waste reduction work plan.

B. Waste Reduction Work Plan: List each type of waste and whether it will be salvaged, recycled, or disposed of in landfill or incinerator. Include types of waste material, points of waste generation, procedures for waste segregation, waste and handling and transportation procedures.

1. Salvaged Materials for Reuse: For materials that will be salvaged and reused in this Project, describe methods for preparing salvaged materials before incorporation into the Work.
2. Salvaged Materials for Sale: For materials that will be sold to individuals and organizations, include list of their names, addresses, and telephone numbers.
3. Salvaged Materials for Donation: For materials that will be donated to individuals and organizations, include list of their names, addresses, and telephone numbers.
4. Recycled Materials: Include list of local receivers and processors and type of recycled materials each will accept. Include names, addresses, and telephone numbers.
5. Disposed Materials: Indicate how and where materials will be disposed of. Include name, address, and telephone number of each landfill and incinerator facility.
6. Handling and Transportation Procedures: Include method that will be used for separating recyclable waste including sizes of containers, container labeling, and designated location where materials separation will be performed.

C. Cost/Revenue Analysis: Not required.

PART 2 - PRODUCTS (Not Used)

PART 3 - EXECUTION

3.1 PLAN IMPLEMENTATION

A. General: Implement approved waste management plan. Provide handling, containers, storage, signage, transportation, and other items as required to implement waste management plan during the entire duration of the Contract.

1. Comply with operation, termination, and removal requirements in Section 015000 "Temporary Facilities and Controls."

B. Waste Management Coordinator: Engage a waste management coordinator to be responsible for implementing, monitoring, and reporting status of waste management work plan. This may be a collateral duty of the site superintendent or an assisitant.

C. Training: Train workers, subcontractors, and suppliers on proper waste management procedures, as appropriate for the Work.

1. Distribute waste management plan to everyone concerned, including subcontractors, within three days of submittal return.
2. Review waste management plan goals with entities when they first begin work on-site. Review plan procedures and locations established for salvage, recycling, and disposal.

D. Site Access and Temporary Controls: Conduct waste management operations to ensure minimum interference with roads, streets, walks, walkways, and other adjacent occupied and used facilities.

1. Designate and label specific areas on Project site necessary for separating materials that are to be salvaged, recycled, reused, donated, and sold.
2. Comply with Section 015000 "Temporary Facilities and Controls" for controlling dust and dirt, environmental protection, and noise control.

3.2 SALVAGING DEMOLITION WASTE

A. Salvaged Items for Reuse in the Work: Salvage items for reuse and handle as follows:

1. Clean salvaged items.
2. Pack or crate items after cleaning. Identify contents of containers with label indicating elements, date of removal, quantity, and location where removed.
3. Store items in a secure area until installation.
4. Protect items from damage during transport and storage.
5. Install salvaged items to comply with installation requirements for new materials and equipment. Provide connections, supports, and miscellaneous materials necessary to make items functional for use indicated.

B. Salvaged Items for Sale and Donation: Not permitted on Project site.

C. Salvaged Items for Owner's Use: Salvage items for Owner's use and handle as follows:

1. Clean salvaged items.
2. Pack or crate items after cleaning. Identify contents of containers with label indicating elements, date of removal, quantity, and location where removed.
3. Store items in a secure area until delivery to Owner.

4. Transport items to Owner's storage area on-site or as otherwise designated by Owner's representative.
5. Protect items from damage during transport and storage.

D. Equipment: Drain tanks, piping, and fixtures. Seal openings with caps or plugs. Protect equipment from exposure to weather.

E. Plumbing Fixtures: Separate by type and size.

F. Lighting Fixtures: Separate lamps by type and protect from breakage.

G. Electrical Devices: Separate switches, receptacles, switchgear, transformers, meters, panelboards, circuit breakers, and other devices by type.

3.3 RECYCLING DEMOLITION AND CONSTRUCTION WASTE, GENERAL

A. General: Recycle paper and beverage containers used by on-site workers.

B. Recycling Receivers and Processors: List below is provided for information only; available recycling receivers and processors include, but are not limited to, the following:

1. EPDM Roofing and Insulation: Nationwide Foam, Inc., 703 Waverly Street, Framingham, MA 01702, (888) 820-2760, www.nationwidefoamrecycling.com

C. Recycling Incentives: Revenues, savings, rebates, tax credits, and other incentives received for recycling waste materials shall be shared equally by Owner and Contractor.

D. Preparation of Waste: Prepare and maintain recyclable waste materials according to recycling or reuse facility requirements. Maintain materials free of dirt, adhesives, solvents, petroleum contamination, and other substances deleterious to the recycling process.

E. Procedures: Separate recyclable waste from other waste materials, trash, and debris. Separate recyclable waste by type at Project site to the maximum extent practical according to approved construction waste management plan.

1. Provide appropriately marked containers or bins for controlling recyclable waste until removed from Project site. Include list of acceptable and unacceptable materials at each container and bin.

a. Inspect containers and bins for contamination and remove contaminated materials if found.

2. Stockpile processed materials on-site without intermixing with other materials. Place, grade, and shape stockpiles to drain surface water. Cover to prevent windblown dust.

3. Stockpile materials away from construction area. Do not store within drip line of remaining trees.
4. Store components off the ground and protect from the weather.
5. Remove recyclable waste from Owner's property and transport to recycling receiver or processor.

3.4 RECYCLING DEMOLITION WASTE

A. Concrete: Remove reinforcement and other metals from concrete and sort with other metals.

1. Reduce concrete waste to best practical size for removal off-site and pulverizing or processing further as needed for reuse.
2. Remove steel reinforcing mesh and bars and recycle steel separately.

B. Masonry: Remove metal reinforcement, anchors, and ties from masonry and sort with other metals.

1. Reduce masonry waste to best practical size for removal off-site and pulverizing or processing further as needed for reuse.
2. Remove ferrous metal reinforcing bars, joint reinforcing and brick ties, and recycle separately.

C. Wood Materials: Sort and stack members according to size, type, and length. Separate lumber, engineered wood products, panel products, and treated wood materials.

D. Metals: Separate metals by type.

1. Structural Steel: Stack members according to size, type of member, and length.
2. Remove and dispose of bolts, nuts, washers, and other rough hardware.

E. Membrane Roofing: Separate EPDM membrane from insulation. Remove and dispose of fasteners and accessories. Store collected insulation in containers or other manner preventing on-site disintegration and blowing of debris in wind.

F. Gypsum Board: Stack large clean pieces on wood pallets or in container and store in a dry location. Remove edge trim and sort with other metals. Remove and dispose of fasteners.

G. Acoustical Ceiling Panels and Tile: Stack large clean pieces on wood pallets and store in a dry location.

H. Metal Suspension System: Separate metal members including trim, and other metals from acoustical panels and tile and sort with other metals.

I. Piping: Reduce piping to straight lengths and store by type and size. Separate supports, hangers, valves, sprinklers, and other components by type and size.

J. Conduit: Reduce conduit to straight lengths and store by type and size.

3.5 RECYCLING CONSTRUCTION WASTE

A. Packaging:

1. Cardboard and Boxes: Break down packaging into flat sheets. Bundle and store in a dry location.
2. Polystyrene Packaging: Separate and bag materials.
3. Pallets: As much as possible, require deliveries using pallets to remove pallets from Project site. For pallets that remain on-site, break down pallets into component wood pieces and comply with requirements for recycling wood.
4. Crates: Break down crates into component wood pieces and comply with requirements for recycling wood.

B. Wood Materials:

1. Clean Cut-Offs of Lumber: Grind or chip into small pieces.
2. Clean Sawdust: Bag sawdust that does not contain painted or treated wood.

a. Comply with requirements in Section 329300 "Plants" for use of clean sawdust as organic mulch.

C. Gypsum Board: Stack large clean pieces on wood pallets or in container and store in a dry location.

1. Clean Gypsum Board: Grind scraps of clean gypsum board using small mobile chipper or hammer mill. Screen out paper after grinding.

a. Comply with requirements in Section 329300 "Plants" for use of clean ground gypsum board as inorganic soil amendment.

3.6 DISPOSAL OF WASTE

A. General: Except for items or materials to be salvaged, recycled, or otherwise reused, remove waste materials from Project site and legally dispose of them in a landfill or incinerator acceptable to authorities having jurisdiction.

1. Except as otherwise specified, do not allow waste materials that are to be disposed of accumulate on-site.
2. Remove and transport debris in a manner that will prevent spillage on adjacent surfaces and areas.

B. Burning: Do not burn waste materials.

C. Disposal: Remove waste materials from Owner's property and legally dispose of them.

END OF SECTION 017419

SECTION 070150.19 - PREPARATION FOR RE-ROOFING

PART 1 - GENERAL

1.1 RELATED DOCUMENTS

A. Drawings and general provisions of the Contract, including General and Supplementary Conditions and Division 01 Specification Sections, apply to this Section.

1.2 SUMMARY

A. Section Includes:

1. Roof tear-off.
2. Temporary roofing membrane.
3. Removal of base flashings.

B. Related Sections:

1. Section 011000 "Summary" for use of the premises and phasing requirements.
2. Section 015000 "Temporary Facilities" for temporary construction and environmental-protection measures for reroofing preparation.
3. Section 024119 "Selective Demolition" for additional roofing demolition requirements.
4. Section 075216 "Styrene-Butadiene-Styrene (SBS) Modified Bituminous Membrane Roofing" for new roofing system requirements.
5. Section 076200 "Sheet Metal Flashing and Trim" for new sheet metal flashing and trim requirements.
6. Section 077200 "Roof Accessories" for new rooftop-mounted accessories and support items.

1.3 MATERIALS OWNERSHIP

A. Except for items or materials indicated to be reused, reinstalled, or otherwise indicated to remain Owner's property, demolished materials shall become Contractor's property and shall be removed from Project site.

1.4 DEFINITIONS

A. Roofing Terminology: Refer to ASTM D 1079 and glossary in NRCA's "The NRCA Roofing and Waterproofing Manual" for definition of terms related to roofing work in this Section.

B. Existing Membrane Roofing System: Unballasted, adhered EPDM roofing membrane, roof insulation, surfacing, and components and accessories between deck and roofing membrane.

C. Roof Tear-Off: Removal of existing membrane roofing system from deck.

D. Partial Roof Tear-Off: Removal of a portion of existing membrane roofing system from deck or removal of selected components and accessories from existing membrane roofing system.

E. Remove: Detach items from existing construction and legally dispose of them off-site unless indicated to be removed and reinstalled.

F. Existing to Remain: Existing items of construction that are not indicated to be removed.

1.5 ACTION SUBMITTALS

A. Product Data: For each type of product indicated.

B. Temporary Roofing: Include Product Data and description of temporary roofing system. If temporary roof will remain in place, submit surface preparation requirements needed to receive permanent roof, and submit a letter from roofing membrane manufacturer stating acceptance of the temporary membrane and that its inclusion will not adversely affect the roofing system's resistance to fire and wind or its FM Global rating.

1.6 INFORMATIONAL SUBMITTALS

A. Qualification Data: For Installer including certificate that Installer is approved by warrantor of existing roofing system.

B. Fastener pull-out test report.

C. Photographs: Show existing conditions of adjoining construction and site improvements, including exterior and interior finish surfaces that might be misconstrued as having been damaged by reroofing operations. Submit before Work begins.

D. Landfill Records: Indicate receipt and acceptance of hazardous wastes, such as asbestos-containing material, by a landfill facility licensed to accept hazardous wastes.

1.7 QUALITY ASSURANCE

A. Installer Qualifications: Installer of new membrane roofing system approved by manufacturer/warrantor of replacement roofing system.

B. Regulatory Requirements: Comply with governing EPA notification regulations before beginning membrane roofing removal. Comply with hauling and disposal regulations of authorities having jurisdiction.

C. Reroofing Conference: Conduct conference at Project site as specified under Section 075216 "SBS-Modified Bituminous Membrane Roofing (Cold Adhesive-Applied)" and as follows:

1. Meet with Owner; Architect; Owner's insurer if applicable; testing and inspecting agency representative; roofing system manufacturer's representative; deck Installer; roofing Installer including project manager, superintendent, and foreman; and installers whose work interfaces with or affects reroofing including installers of roof accessories and roof-mounted equipment.
2. Review methods and procedures related to roofing system tear-off and replacement including, but not limited to, the following:

   a. Reroofing preparation, including membrane roofing system manufacturer's written instructions.
   b. Temporary protection requirements for existing roofing system that is to remain during and after installation.
   c. Existing roof drains and roof drainage during each stage of reroofing, and roof drain plugging and plug removal requirements.
   d. Construction schedule and availability of materials, Installer's personnel, equipment, and facilities needed to make progress and avoid delays.
   e. Existing deck removal procedures and Owner notifications.
   f. Condition and acceptance of existing roof deck and base flashing substrate for reuse.
   g. Structural loading limitations of deck during reroofing.
   h. Base flashings, special roofing details, drainage, penetrations, equipment curbs, and condition of other construction that will affect reroofing.
   i. HVAC shutdown and sealing of air intakes.
   j. Shutdown of fire-suppression, -protection, and -alarm and -detection systems.
   k. Governing regulations and requirements for insurance and certificates if applicable.
   l. Existing conditions that may require notification of Architect before proceeding.

1.8 PROJECT CONDITIONS

A. Owner will occupy portions of building immediately below reroofing area until June 16, 2014. Thereafter, building will remain unoccupied until Substantial Completion, August 15, 2014; however, Owner will continue to store building contents, including fixtures, furnishings, equipment, and sundry educational media and materials throughout the entire work period. Conduct reroofing so Owner's operations and stored items will not be disrupted or adversely affected. Provide Owner with not less than 24 hours' notice of activities that may affect Owner's operations.

1. Coordinate work activities daily and place protective dust or water leakage covers over sensitive equipment or furnishings, shut down HVAC and fire-alarm or -detection equipment if needed, and evacuate occupants from below the work area.
2. Before working over structurally impaired areas of deck, identify work area clearly to all trades and personnel below the affected area. Verify that trades and personnel below the work area have been evacuated before proceeding with work over the impaired deck area.

B. Protect building to be reroofed, adjacent buildings, walkways, site improvements, exterior plantings, and landscaping from damage or soiling from reroofing operations.

C. Maintain access to existing walkways, corridors, and other adjacent occupied or used facilities.

D. Conditions existing at time of inspection for bidding will be maintained by Owner as far as practical.

1. Electronic copies of construction documents from earlier construction, additions and renovations will be made available for Contractor's reference.
2. Construction Drawings and Project Manual for existing roofing system are provided for Contractor's reference. Contractor is responsible for conclusions derived from existing documents.

E. Limit construction loads on roof to rooftop equipment wheel loads and 10 PSF for uniformly distributed loads. Do not overload roof structure. Do not stockpile demolished materials on roof prior to removal to grade.

F. Weather Limitations: Proceed with reroofing preparation only when existing and forecasted weather conditions permit Work to proceed without water entering existing roofing system or building.

G. Hazardous Materials: It is not expected that hazardous materials such as asbestos-containing materials will be encountered in the Work.

1. If materials suspected of containing hazardous materials are encountered, do not disturb; immediately notify Architect and Owner. Hazardous materials will be removed by Owner under a separate contract.

PART 2 - PRODUCTS

2.1 INFILL MATERIALS

A. Use infill materials matching existing membrane roofing system materials unless otherwise indicated or approved in advance by Architect.

2.2 TEMPORARY ROOFING MATERIALS

A. Design and selection of materials for temporary roofing are responsibilities of Contractor.

B. Sheathing Paper: Red-rosin type, minimum 3 lb/100 sq. ft. (0.16 kg/sq. m).

C. Base Sheet: ASTM D 4601, Type II, nonperforated, asphalt-impregnated and -coated, glass-fiber sheet.

D. Glass-Fiber Felts: ASTM D 2178, Type IV, asphalt-impregnated, glass-fiber felt.

E. Asphalt Primer: ASTM D 41.

F. Roofing Asphalt: ASTM D 312, Type III or IV.

2.3 RECOVER BOARDS

A. Recover Board: ASTM C 208, Type II, Grade 1, cellulosic-fiber insulation board; 1/2 inch (13 mm) thick.

B. Recover Board: ASTM C 1177/C 1177M, glass-mat, water-resistant gypsum substrate; 1/2 inch (13 mm) thick.

C. Recover Board: ASTM C 728, perlite board; 1/2 inch (13 mm) thick.

D. Fasteners: Factory-coated steel fasteners, No. 12 or 14, and metal or plastic plates listed in FM Approval's "Approval Guide," designed for fastening recover boards to deck.

2.4 AUXILIARY REROOFING MATERIALS

A. General: Auxiliary reroofing preparation materials recommended by roofing system manufacturer for intended use and compatible with components of existing and new membrane roofing system.

B. Base Sheet Fasteners: Capped head, factory-coated steel fasteners, listed in FM Approval's "Approval Guide."

C. Metal Flashing Sheet: Metal flashing sheet is specified in Section 076200 "Sheet Metal Flashing and Trim."

PART 3 - EXECUTION

3.1 PREPARATION

A. Protect existing membrane roofing system that is not ready to be reroofed. Maintain gravel ballast at membrane and insulation that is ready for replacement in any given day so as to ensure existing roof will not be subjected to uplift prior to replacement.

B. Coordinate with Owner to shut down air-intake equipment in the vicinity of the Work. Cover air-intake louvers before proceeding with reroofing work that could affect indoor air quality or activate smoke detectors in the ductwork.

C. Coordinate re-roofing operations with demolition of existing rooftop equipment and placement of new rooftop equipment. Refer to Rooftop Equipment (RTE) Schedule for identification of, and action related to, all items, existing and new.

D. During removal operations, have sufficient and suitable materials on-site to facilitate rapid installation of temporary protection in the event of unexpected rain. Contractor shall maintain a daily log of ALL weather forecasts and plan re-roofing operations accordingly.

E. Maintain roof drains in functioning condition to ensure roof drainage at end of each workday. Prevent debris from entering or blocking roof drains and conductors. Use roof-drain plugs specifically designed for this purpose. Remove roof-drain plugs at end of each workday, when no work is taking place, or when rain is forecast.

1. If roof drains are temporarily blocked or unserviceable due to roofing system removal or partial installation of new membrane roofing system, provide alternative drainage method to remove water and eliminate ponding. Do not permit water to enter into or under existing membrane roofing system components that are to remain.

F. Verify that rooftop utilities and service piping have been shut off before beginning the Work.

3.2 ROOF TEAR-OFF

A. Remove aggregate ballast from roofing membrane. Store aggregate ballast at stockpile point on grade designated by Owner for Owner's reclamation.

B. Roof Tear-Off: Remove existing roofing membrane and other membrane roofing system components down to the deck.

1. Remove cover boards, roof insulation and substrate boards down to substrate deck. Note that, at portions of the roof over Areas 'B,' 'C' and 'F,' substrate deck consists of an existing gypsum concrete-filled surface to remain. At Areas 'E' and 'G,' remove existing roofing and insulation down to substrate metal deck.
2. Only a small segment of Area 'D1' requires re-roofing, in conjunction with correcting roof drainage in the small lower roof area across front of Library.
3. Remove EPDM membranes adhered to parapets and at base flashing.
4. Remove fasteners from deck or cut fasteners off slightly above deck surface.

3.3 DECK PREPARATION

A. Inspect deck after tear-off of membrane roofing system.

B. Verify that substrate is visibly dry and free of moisture.

C. If broken or loose fasteners that secure deck panels to one another or to structure are observed or if deck appears or feels inadequately attached, immediately notify Architect. Do not proceed with installation until directed by Architect.

D. If deck surface is not suitable for receiving new roofing or if structural integrity of deck is suspect, immediately notify Architect. Do not proceed with installation until directed by Architect.

E. Replace or patch openings in existing deck as indicated on Drawings. Replacement deck is specified in Section 053100 "Steel Decking."

3.4 INFILL MATERIALS INSTALLATION

A. Immediately after removal of selected portions of existing membrane roofing system, and inspection and repair, if needed, of deck, fill in the tear-off areas to match existing membrane roofing system construction.

1. Install new roofing membrane patch over roof infill area. If new roofing membrane is installed the same day tear-off is made, roofing membrane patch is not required.

3.5 TEMPORARY ROOFING MEMBRANE

A. **Remove only as much roofing as can be replaced with a completely new roof system and made watertight in a single day.** Install approved temporary roofing membrane over area to be reroofed only as needed due to unforeseen conditions.

B. Remove temporary roofing membrane before installing new roofing membrane.

C. Prepare the temporary roof to receive new roofing membrane according to approved temporary roofing membrane method. Restore temporary roofing membrane to watertight condition. Obtain approval for temporary roof substrate from roofing membrane manufacturer and Architect before installing new roof.

3.6 EXISTING BASE FLASHINGS

A. Remove existing base flashings around parapets, curbs, walls, and penetrations.

1. Clean substrates of contaminants such as asphalt, sheet materials, dirt, and debris.

B. Do not damage metal counterflashings that are to remain. Replace metal counterflashings damaged during removal with counterflashings and copings as specified in Section 076200 "Sheet Metal Flashing and Trim" and Section 077200 "Roof Accessories."

C. Inspect parapet sheathing for deterioration and damage. If parapet sheathing has deteriorated, immediately notify Architect.

3.7 FASTENER PULL-OUT TESTING

A. Perform fastener pull-out tests according to SPRI FX-1, and submit test report to roofing membrane manufacturer, Architect and Owner's Representative before installing new membrane roofing system.

1. Obtain roofing membrane manufacturer's approval to proceed with specified fastening pattern. Roofing membrane manufacturer may furnish revised fastening pattern commensurate with pull-out test results.

3.8 DISPOSAL

A. Collect demolished materials and place in containers. Promptly dispose of demolished materials. Do not allow demolished materials to accumulate on-site.

1. Storage or sale of demolished items or materials on-site is not permitted.

B. Transport and legally dispose of or recycle demolished materials off Owner's property.

END OF SECTION 070150.19

Appendix to Specification Section 230500 "Heating, Ventilating, Air Conditioning:" Owner-Furnished/ Contractor-Installed Rooftop Air Handling Units Shop Drawings

THOMPSON
Consulting Engineers

22 Enterprise Parkway,
Suite 200
Hampton, VA 23666
Tel: (757) 599-4415
Fax: (757) 599-4113

SHOP DRAWING REVIEW TRANSMITTAL

Date: January 27, 2014

MJT Project No: 13051

To: Engineered Air

Attn: Steve Jones

Re: Grafton Bethel Elementary School

■ For your use	☐ Furnish as Submitted
☐ For review and comment	■ Furnish as Corrected
■ As requested	☐ Rejected, Revise & Resubmit
☐ For approval	☐ Receipt Acknowledged

---

1 Copy **230500** Rooftop Units

From: Philip Blosser
cc:
file: Shop Drawing

SHOP DRAWING REVIEW

THOMPSON
Consulting Engineers

9308 Warwick Boulevard
Newport News, VA 23601
Tel: (757) 599-4415
Fax: (757) 599-4113

PROJECT: **Grafton Bethel Elementary School**

TRANSMITTAL NUMBER:

MATERIAL SUBMITTED: Rooftop Units

COMMISSION NUMBER: 13051 (MJT)

REVIEWED BY: **Nader Vasdiki**

DATE: **January 27, 2014**

REVIEW COMMENTS

230500

- Rooftop Units (RTU-3, 4, 7 and RVU-5and 6) FURNISH AS CORRECTED

  - Provide air flow monitoring station as specified (IAQ-Tek) instead of Ebtron.
  - RTU-7 return opening shall be located at the side of the unit instead of down return.

☐ FURNISH AS SUBMITTED ☐ REVISE & RESUBMIT

☐ REJECTED ☐ SUBMIT SPECIFIED ITEM

☒ FURNISH AS CORRECTED

Corrections or comments made on the shop drawings during this review do not relieve contractor from compliance with requirement of the drawings and specifications. This check is only for review of general conformance with the design concept of the project and general compliance with the information given in the contract documents. The contractor is responsible for confirming and correlating all quantities and dimensions; selecting fabrication processes and techniques of construction; coordinating his work with that of all other trades; and performing his work in a safe and satisfactory manner.

THOMPSON Consulting Engineers

Date NCV By 1-27-14

Corrections or comments made on the shop drawings during this review **do not** relieve the contractor from compliance with requirements of the drawings and specifications. This check is only of general conformance with the design concept of the project and general compliance with the information given in the contract documents. The contractor is responsible for conforming and correlating all quantities and dimensions, selecting fabrication processes and techniques of construction, and coordinating his work with that of all other trades.

DRAWING TRANSMITTAL SHEET

EngA ENGINEERED AIR

JOB NO. **DK6927(RV655)**

DATE **January 17, 2014**

☑ **RICHMOND SALES OFFICE**
SUITE 126 1503 SANTA ROAD
RICHMOND VA
23229
(804) 673-1220

HEAD OFFICE & FACTORY
DESOTO KANSAS

OTHER USA SALES OFFICES
DESOTO, CLEVELAND, DENVER, HOUSTON, CINCINNATI, KANSAS, CHICAGO, COLUMBUS, DALLAS, ST LOUIS, ORLANDO, INDIANAPOLIS, OMAHA, PITTSBURGH, AUSTIN, CHARLOTTE, SAN FRANCISCO, PORTLAND, WASHINGTON, SAN DIEGO

CONTRACTOR **YORK COUNTY SCHOOLS**
ADDRESS **302 DARE ROAD**
YORKTOWN VA
23692
ENGINEER **THOMPSON CONSULTING ENGINEERS**
JOB NAME **GRAFTON BETHEL ES PHASE III]**

☑ THIS ORDER IS SUBJECT TO APPROVAL. MANUFACTURING IS HELD PENDING RETURN OF ONE APPROVED COPY OF THESE FORMS TO THE INDICATED OFFICE.

☐ THIS ORDER IS NOT SUBJECT TO APPROVAL AND IS BEING MANUFACTURED ACCORDING TO THE ATTACHED FORMS.

COPIES ENCLOSED	DESCRIPTION
8	**EngA Submittal Record RTU-3** *(Indicated as RTU-1 on TCE's Drawings)*
8	**EngA Heat Wheel Performance Data Sheet**
8	**EngA Coil Certificate Data Sheet**
8	**TwinCity Supply Fan Performance Curve and Sound Data**
8	**TwinCity Exhaust Fan Performance Curve and Sound Data**
8	**EngA Mechanical Drawing 06927M-03-1**
8	**EngA Roof Curb Drawing 06927C-03-1**
8	**EngA Internal Wiring Diagram 06927E-03-1**
8	**EngA Internal Wiring Diagram 06927E-03-2**
8	**EngA Internal Wiring Diagram 06927E-03-3**
8	**EngA Electrical Data Sheet RTU-3**
8	**EngA BacNet Points List**
8	**EngA Field Wiring Diagram 06927F-03-1**
8	**EngA Submittal Record RTU-4** *(Indicated as RTU-2 on TCE's Drawings)*
8	**EngA Coil Certificate Data Sheet**
8	**Lau Supply Fan Performance Curve and Sound Data**
8	**EngA Mechanical Drawing 06927M-04-1**
8	**EngA Roof Curb Drawing 06927C-04-1**
8	**EngA Internal Wiring Diagram 06927E-04-1**
8	**EngA Internal Wiring Diagram 06927E-04-2**
8	**EngA Electrical Data Sheet RTU-4**
8	**EngA BacNet Points List**
8	**EngA Field Wiring Diagram 06927F-04-1**
8	**EngA Submittal Record RTU-7** *(Indicated as RTU-3 on TCE's Drawings)*

PER **STEVE JONES / NSS**

DRAWING TRANSMITTAL SHEET

EngA ENGINEERED AIR

JOB NO. **DK6927(RV655)**

DATE **January 17, 2014**

COPIES ENCLOSED	DESCRIPTION
8	EngA Coil Certificate Data Sheet
8	TwinCity Supply Fan Performance Curve and Sound Data
8	EngA Mechanical Drawing 06927M-07-1
8	EngA Roof Curb Drawing 06927C-07-1
8	EngA Internal Wiring Diagram 06927E-07-1
8	EngA Internal Wiring Diagram 06927E-07-2
8	EngA Electrical Data Sheet RTU-7
8	EngA BacNet Points List
8	EngA Field Wiring Diagram 06927F-07-1
8	EngA Submittal Record RVU-5 *(Indicated as RVU-3 on TCE's Drawings)*
8	EngA Coil Certificate Data Sheet
8	EngA Heat Pipe Performance Data Sheet
8	EngA Heat Wheel Performance Data Sheet
8	TwinCity Supply Fan Performance Curve and Sound Data
8	Lau Exhaust Fan Performance Curve and Sound Data
8	EngA Mechanical Drawing 06927M-05-1
8	EngA Roof Curb Drawing 06927C-05-1
8	EngA Internal Wiring Diagram 06927E-05-1
8	EngA Internal Wiring Diagram 06927E-05-2
8	EngA Internal Wiring Diagram 06927E-05-3
8	EngA Electrical Data Sheet RVU-5
8	EngA BacNet Points List
8	EngA Field Wiring Diagram 06927F-05-1
8	EngA Submittal Record RVU-6 *(Indicated as RVU-4 on TCE's Drawings)*
8	EngA Coil Certificate Data Sheet
8	EngA Heat Pipe Performance Data Sheet
8	EngA Heat Wheel Performance Data Sheet
8	TwinCity Supply Fan Performance Curve and Sound Data
8	Lau Exhaust Fan Performance Curve and Sound Data
8	EngA Mechanical Drawing 06927M-06-1
8	EngA Roof Curb Drawing 06927C-06-1
8	EngA Internal Wiring Diagram 06927E-05-1
8	EngA Internal Wiring Diagram 06927E-05-2
8	EngA Internal Wiring Diagram 06927E-05-3
8	EngA Electrical Data Sheet RVU-6
8	EngA BacNet Points List
8	EngA Field Wiring Diagram 06927F-05-1
6	Installation Operation and Maintenance Manual (FW Series)
6	Installation Operation and Maintenance Manual (DJX Series)

PER **STEVE JONES / NSS**

DRAWING TRANSMITTAL SHEET

EngA®

ENGINEERED AIR®

JOB NO. **DK6927(RV655)**

DATE **January 17, 2014**

COPIES ENCLOSED	DESCRIPTION
6	**Installation Operation and Maintenance Manual (HRW Series)**

PER **STEVE JONES / NSS**

EngA ENGINEERED AIR

SUBMITTAL RECORD

JOB NAME: GRAFTON BETHEL ES PHASE III] **JOB NO:** DK6927(RV655)

CUSTOMER: YORK COUNTY SCHOOLS **ENGINEER:** THOMPSON CONSULTING ENGINEERS

EngA MODEL: FWE224/DJX40/HRW900/O/C/MV **QTY:** 1 **TAG:** RTU-3

(Indicated as RTU-1 on TCE's Drawings)

SHIPPING AND APPROVAL INFORMATION

MOUNTING Outdoor Base Mounted c/w Prefab Roof Curb **ACCESS** As Per Drawing

UNIT MINIMUM AMBIENT -20°F **SHIPPING WEIGHT** 10600 lb **OPERATING WEIGHT** 10900 lb

NO. OF PIECES 3 (Unit + Curb + Hood)

- ETL approval.
- Operating weight includes curb.

SUPPLY AIR DATA

AIR FLOW	5,900 CFM	**FAN SIZE**	(1) 182 BAE-DIDW	**TSP**	4.3 in w.c.	**RPM**	1946
MOTOR SIZE	7 1/2 HP	**TYPE (RPM)**	Super 'E' ODP (1750)	**ESP**	0.75 in w.c.	**BHP**	5.46 BHP

- Supply air fan/motor c/w spring vibration isolation and pillow block bearings.
- Unit mounted ABB adjustable speed drive (air balancing only) c/w integral line reactors, vented control cabinet, control cabinet heater and manual bypass.

EXHAUST AIR DATA

AIR FLOW	5,300 CFM	**FAN SIZE**	(1) 165 EPF CL II	**TSP**	2.0 in w.c.	**RPM**	3171
MOTOR SIZE	5 HP	**TYPE (RPM)**	Super 'E' ODP (3450)	**ESP**	0.5 in w.c.	**BHP**	4.44 BHP

- Exhaust air fan/motor c/w spring vibration isolation and pillow block bearings.
- Unit mounted ABB adjustable speed drive (1,380 CFM minimum airflow and 15.6 Hz operating frequency) c/w integral line reactors, vented control cabinet, control cabinet heater and manual bypass.
- Exhaust air data includes 124 CFM purge (ie 1,380 CFM + 124 CFM purge + 3796 CFM bypass = 5,300 CFM)

AIR OPENING DATA

AIR OPENING	LOCATION	DAMPER TYPE	OPERATION
SUPPLY AIR	See Below [1]		
RETURN AIR	See Below [1]		
OUTSIDE AIR	See Below [1]	RUSKIN CD-50 Low Leakage Aluminum Air-foil Parallel Blade	Modulating
EXHAUST AIR	See Below [1]	RUSKIN CD-50 Low Leakage Aluminum Air-foil Parallel Blade	Two Position
S/A HRW BYPASS	See Below [1]	RUSKIN CD-50 Low Leakage Aluminum Air-foil Parallel Blade	Two Position
E/A HRW BYPASS	See Below [1]	RUSKIN CD-50 Low Leakage Aluminum Air-foil Parallel Blade	Two Position
RECIRC AIR	See Below [1]	RUSKIN CD-50 Low Leakage Aluminum Air-foil Parallel Blade	Modulating

- [1] - See Mechanical Drawing
- Ebtron Gold Outside Airflow Monitoring Station.

CONSTRUCTION DATA

UNIT CABINET	18 gauge satin coat galvanized sheet metal c/w 2" 3 lb/ft³ insulation on entire unit casing.
UNIT LINER	22 gauge solid liner throughout but not including unit underside.
UNIT FLOOR	18 gauge satin coat galvanized sheet metal on entire unit floor.
	Floor c/w floor drain connection through base frame (see mechanical drawing for locations)
EXTERIOR PAINT	DTM Polyurethane paint finish (color to be advised) on all exterior surface but not including unit underside.
AIRSIDE DOOR	All access - deluxe welded steel framed hinged c/w lever type door handles , stainless steel piano hinges, handles interlocked, and bulb seal gasket.
SERVICE DOOR	Electrical, burner and compressor access - hinged c/w lever type door handle

DATE 17-Jan-2014

Continued on page 2

EngA ENGINEERED AIR

SUBMITTAL RECORD

JOB NAME: GRAFTON BETHEL ES PHASE III] **JOB NO:** DK6927(RV655)

EngA MODEL: FWE224/DJX40/HRW900/O/C/MV **QTY:** 1 **TAG:** RTU-3

(Indicated as RTU-1 on TCE's Drawings)

CONSTRUCTION DATA (CONTINUED)

DRAIN PAN 18 gauge 304L stainless steel drain pan c/w floor drain connection through casing on DX coil section and DX coil header section.
18 gauge satin coat galvanized drain pan c/w floor drain connection through base frame on heat wheel supply and exhaust leaving section.

- EngA drainable weather louvre(s) c/w 1" bird screen.
- 6" x 6" electrical chase.
- Heat wheel : (1) HRW enthalpy wheel c/w AC motor(See attached performance data).
- Humid Climate Construction c/w slope roof.

ELECTRICAL DATA

POWER SUPPLY	MINIMUM CIRCUIT AMPACITY	MAXIMUM FUSE(D.E.)	MAXIMUM BREAKER
208 / 3 / 60	144.8 AMPS	150 AMPS	150 AMPS

- See Electrical Data Sheet for details.
- Smoke detecter provided by others. Installed by EngA mounted on return air opening.
- MCA based on ABB VFD amps for supply and exhaust motors.

SUPPLY FILTER SECTION DATA - Side Loaded

FILTER TYPE Pleated Filter with MERV 8 rating c/w Metal Frame

QTY/SIZE 4 - 24 x 20 x 2" **QTY/SIZE**

TOTAL GROSS AREA 13.33 SQ.FT. **FACE VELOCITY** 452 FPM @ 6024 CFM

- Filters may be shipped loose or mounted in the tracks.
- 1 spare set of filters - shipped loose

RETURN FILTER SECTION DATA - Side Loaded

FILTER TYPE Pleated Filter with MERV 8 rating

QTY/SIZE 4 - 24 x 20 x 2" **QTY/SIZE**

TOTAL GROSS AREA 13.33 SQ.FT. **FACE VELOCITY** 388 FPM @ 5176 CFM

- Filters may be shipped loose or mounted in the tracks.
- 1 spare set of filters - shipped loose

BURNER HEATING DATA - INDIRECT FIRED (DJX-40)

POWER BURNER EngA 'HT' Series **HEAT EXCH. MATERIAL** Stainless Steel

FUEL Natural Gas **INLET PRESSURE** 7 in wc. **GAS FIELD CONN.** 0.75"

HEAT INPUT 250,000 Btuh **HEAT OUTPUT** 225,000 Btuh **TEMP. RISE** 35.0 °F

- EngA (15 : 1) high turndown burner
- Three pass heat exchanger c/w condensate drain connection. Condensate drain piping must be fully piped to a suitable drain before starting unit.
- Heat exchanger section has 1" 1.5 lb/ft³ insulation with 22 gauge solid liner
- Modulating combustion air and gas control.
- Heating is controlled by CTRAC controller.
- Condensate drain connection through curb. See roof curb drawing for details..

Continued on page 3

EngA ENGINEERED AIR

SUBMITTAL RECORD

JOB NAME: GRAFTON BETHEL ES PHASE III] **JOB NO:** DK6927(RV655)

EngA MODEL: FWE224/DJX40/HRW900/O/C/MV **QTY:** 1 **TAG:** RTU-3

(Indicated as RTU-1 on TCE's Drawings)

AIR COOLED DX SYSTEM DATA

COIL SIZE	52.5 x 40 x 8R x 8 FPI			**VELOCITY**	405 FPM
CAPACITY	264,300 Btuh			**AIR P.D.**	0.61 in.wc.
ENTERING AIR DB / WB	80.4°F / 67.2°F			**LEAVING AIR DB / WB**	52.8°F / 52.4°F
DESIGN AMBIENT TEMP	95°F	**SST/SCT**	47.6°F / 123.8°F	**REFRIGERANT TYPE**	R-407C
COMPRESSOR TYPE	Hermetic Scroll	**MODEL**	ZR61KCE-TF5-250	**QUANTITY**	4

- DX cooling coil c/w alternate tube circuiting, hot gas bypass on lead compressor circuit and stainless steel drain pan.
- CTRAC discharge air control c/w EMS reset - provides 4 stages of mechanical cooling modulates economizer for free cooling and interfaces with heating control.
- CTRAC Integral low limit auto bypass; set @ 40°F.
- Mechanical cooling operates down to 50°F ambient temperature.
- DX coil compressor circuit #1 and #2 c/w insulated suction line, TX valve, service valves, sight glass, liquid line filter/drier, reclaim valve, liquid line solenoid, suction accumlator, head pressure control, EngA intercooler, low pressure control, high pressure control and liquid receiver.
- DX coil compressor circuit #3 and #4 c/w insulated suction line, TX valve, sight glass, low pressure control and liquid line filter/drier.
- Condenser coil c/w hail gaurd.

CONDENSER REHEAT COIL DATA

COIL SIZE	36 x 40 x 3R x 10 FPI	**VELOCITY**	590 FPM
CAPACITY	172,080 Btuh	**AIR P.D.**	0.25 in.wc.
ENTERING AIR DB	52.8°F	**LEAVING AIR DB**	79.8°F

- Modulating condenser reheat part of circuit #1 and #2, provides 27°F of total reheat.
- Leaving discharge temperature of unit will be estimated at 81.8°F, including 2.0°F of motor heat.

SHIPPED LOOSE ITEMS (See filter sections for filters and spare filters)

1 - Pre fabricated roof curb (See drawing for details).
1 - Exhaust hood c/w 1" birdscreen.
1 - Flue Diverter
1 - DJX condensate drain pipe - 42"
1 - Axiom NT25 Tank Condensate Neutralization
1 - Discharge Air Temperature Sensor

ENTHALPY WHEEL PERFORMANCE DATA

Version 1.1.4

JOB NAME: GRAFTON BETHEL ES PHASE III] **JOB NO:** DK6927(RV655)

CUSTOMER: YORK COUNTY SCHOOLS **ENGINEER:** THOMPSON CONSULTING ENGINEERS

LOCATION: Richmond, VA **ALTITUDE:** 0 ft (.0 m)

EngA MODEL: FWE224/DJX40/HRW900/O/C/MV **QTY:** 1 **TAG:** RTU-3

(Indicated as RTU-1 on TCE's Drawings)

Enthalpy Wheel Selection Data - Model AEW-900 (Note 1)			
		Supply	Exhaust
Summer Design	Inlet Static Pressure	-0.75"Wc	-1"Wc
	Air Flow Through wheel	1980 Scfm Outlet	1380 Scfm Inlet
	Entering Temperature DB(RH)/WB	95.0/78.0°F	78.0/65.0°F
	Leaving Temperature DB/WB(RH)	85.1/71.3°F(51%)	92.2/75.5°F(46%)
	Air Pressure Drop	1.06"Wc	0.73"Wc
	Enthalpy Recovery	56.72 Mbh	
	Sensible Recovery	21.14 Mbh	
	Moisture Removal	31.31 Lb/Hr	
	S/A Sensible/Total Efficiency	58.2% / 55.0%	
	ASHRAE Sensible/Total Effectiveness	83.4% / 78.8%	
Winter Design (Note 2)	Inlet Static Pressure	-0.75"Wc	-1"Wc
	Air Flow Through wheel	1980 Scfm Outlet	1380 Scfm Inlet
	Entering Temperature DB(RH)/WB	15.0/12.0°F	68.0/42.5°F
	Leaving Temperature DB/WB(RH)	45.8/30.6°F(2%)	23.8/18.9°F(37%)
	Air Pressure Drop	0.93"Wc	0.67"Wc
	Enthalpy Recovery	60.05 Mbh	
	Sensible Recovery	65.92 Mbh	
	Moisture Addition	-5.6 Lb/Hr	
	Frost Point	-5.0°F	
	ASHRAE Sensible/Total Effectiveness	Note 3	

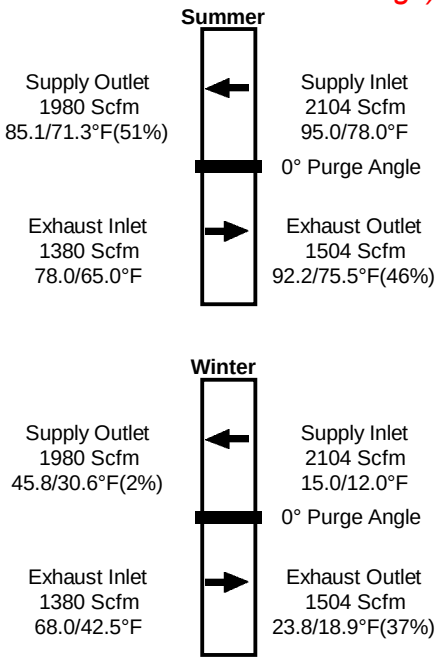

Notes:
1. Energy recovery component certified to the ARI Air-to-Air Energy Recovery Ventilation Equipment Certification Program in accordance with ARI Standard 1060-2001
2. Wheel performance in the winter design section includes the effects of frost control.
3. Without taking frost control into account, the ASHRAE Sensible/Total effectiveness is 83.4% / 80.8%. The supply leaving db/wb will be 45.8/30.6°F and the exhaust leaving db/wb will be 23.8/23.8°F.

DATE: 15-Jan-2014 **SUBMITTED BY:** NSS

EngA ENGINEERED AIR

PACKAGED AIR COOLED SYSTEM PERFORMANCE DATA - EEV UNIT

Version 3.4.3E

Job Name: _____ **Job No.:** 6927 (RV655)

Customer: _____ **Tag No.:** _____

Location: Richmond, VA **Altitude:** 0 feet

Coil Tag	RTU-1 FIN 12 PASS
Unit Model	FWE224.46
Compressor Qty & Model(s) [Refrigerant]	(4) ZR61KCE/ 208-460V [R-407C]
Summer Ambient / Roof Effect, °F	92.0 / 15.0
Cond. Coil Size, in (H x L x R x FPI)	(1 @ 48) x 97 x 3R 14 (3/8" c/w 1" space)
Cond. Header Qty. & Size, in	(4) 7/8
Cond. Coil Circuiting / Ton/Circ (Ton)	12P - 12C - 0(subC + B) / 1.84
Cond. Fan Qty & Type or BHP, Eff.	(3) 26E c/w 1.0 HP
Cond. Tube PD, PSI / Comp HOC	12.1 / 1.28
Cond. Fx / Airflow, CFM, PD, in.wc.	0.6 / 19695, 0.30
DX Coil Size, in (H x L x R x FPI)	52.5 x 40 x 8R 8 (Alternate)
DX Coil Size, mm (H x L x R x FPI)	-
DX Coil Circuiting	14P - 24C - 0B
Header Qty. & Size, in	(4) 1 1/8
DX Tube PD, PSI / Velocity, FPM	1.7 / 1252.2
Distributors Qty. & Size	(4) 4-4-6
Distributors Pressure Drop, PSI	23.6
Distributors Nominal Load (%)	60
# of HGBP / Ton/Circ (Ton)	1 / 0.92
Design Ambient, °F DB	95.0
Net Capacity, MBH	257.7
Total / Sensible Capacity, MBH	264.3 / 176.0
Air Flow Conditions	Standard CFM
Total / DX Air Flow, CFM	5900 / 5900
Air EDBT, °F / EWBT, °F	80.4 / 67.2
DX LDBT / LWBT, °F	52.8 / 52.4
D/A LDBT / LWBT, °F	53.8 / 52.9
Water Removal, lb/h	78.0
Drain Pan, in / No. of Mid. Pan	6 / 0
Leaving Coil Velocity, AFPM	394
Coil Pressure Drop, in.wc.	0.61
SST / SCT, °F	47.6 / 123.8
S/A Motor Information	2.3 BHP @ 89.5% Draw Thru
R/A Motor Information	
EER/ IEER Under design condition	-
CSA C746-06 EER	10.00
AHRI 340/360-2007 EER / IEER	10.0 / 10.1
Notes	2,6,16

(Indicated as RTU-1 on TCE's Drawings)

Notes:
[2] The coil performance data is based on R-407C refrigerant.
[6] Mixed air application.
[16] Refrigerant Pressure Drop In Condenser Is Too High!

Submitted By: NSS Date: 1/15/2014

91

Customer: GRAFTON BETHEL ES PHASE III	Fan Tag: RTU-3 SA
Job ID: DK6927	Model: 182 BAE-DW
CL I	*(Indicated as RTU-1 on TCE's Drawings)*

CFM:	5,900
SP:	4.3 in.wg
RPM:	1946
BHP:	5.46
Outlet Velocity:	1,710
Density:	0.075

TWIN CITY FAN AND BLOWER PERFORMANCE CURVE

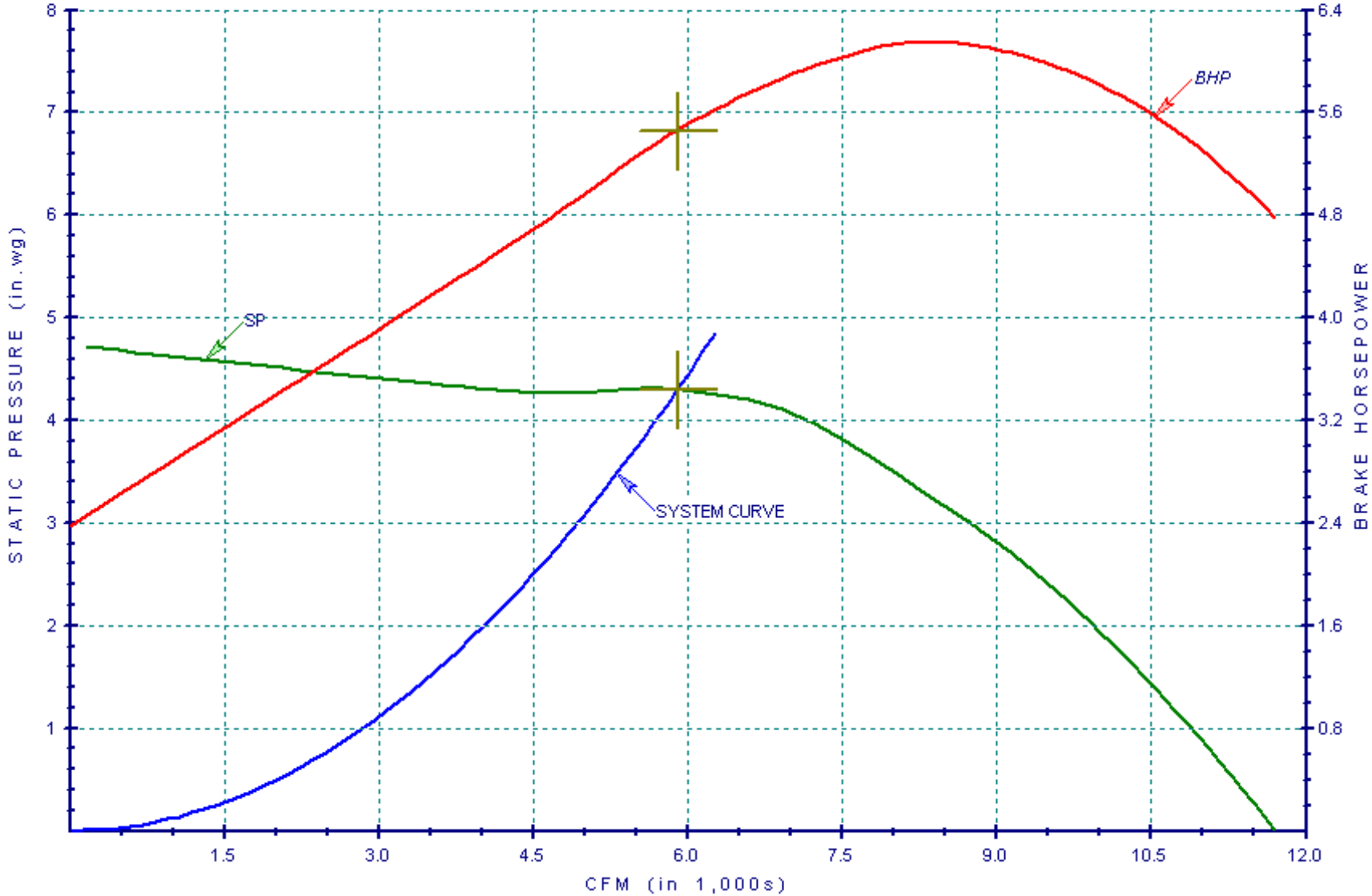

Sound Power Level

Octave	In/Out
1	89 / 103
2	90 / 100
3	92 / 93
4	91 / 87
5	82 / 82
6	79 / 79
7	75 / 74
8	70 / 70

in db re 10^{-12} watts

1/2/2014

Customer: GRAFTON BETHEL ES PHASE III	Fan Tag: RTU-3 EA
Job ID: DK6927	Model: 165 EPF
CL II	*(Indicated as RTU-1 on TCE's Drawings)*

95

TWIN CITY FAN AND BLOWER PERFORMANCE CURVE

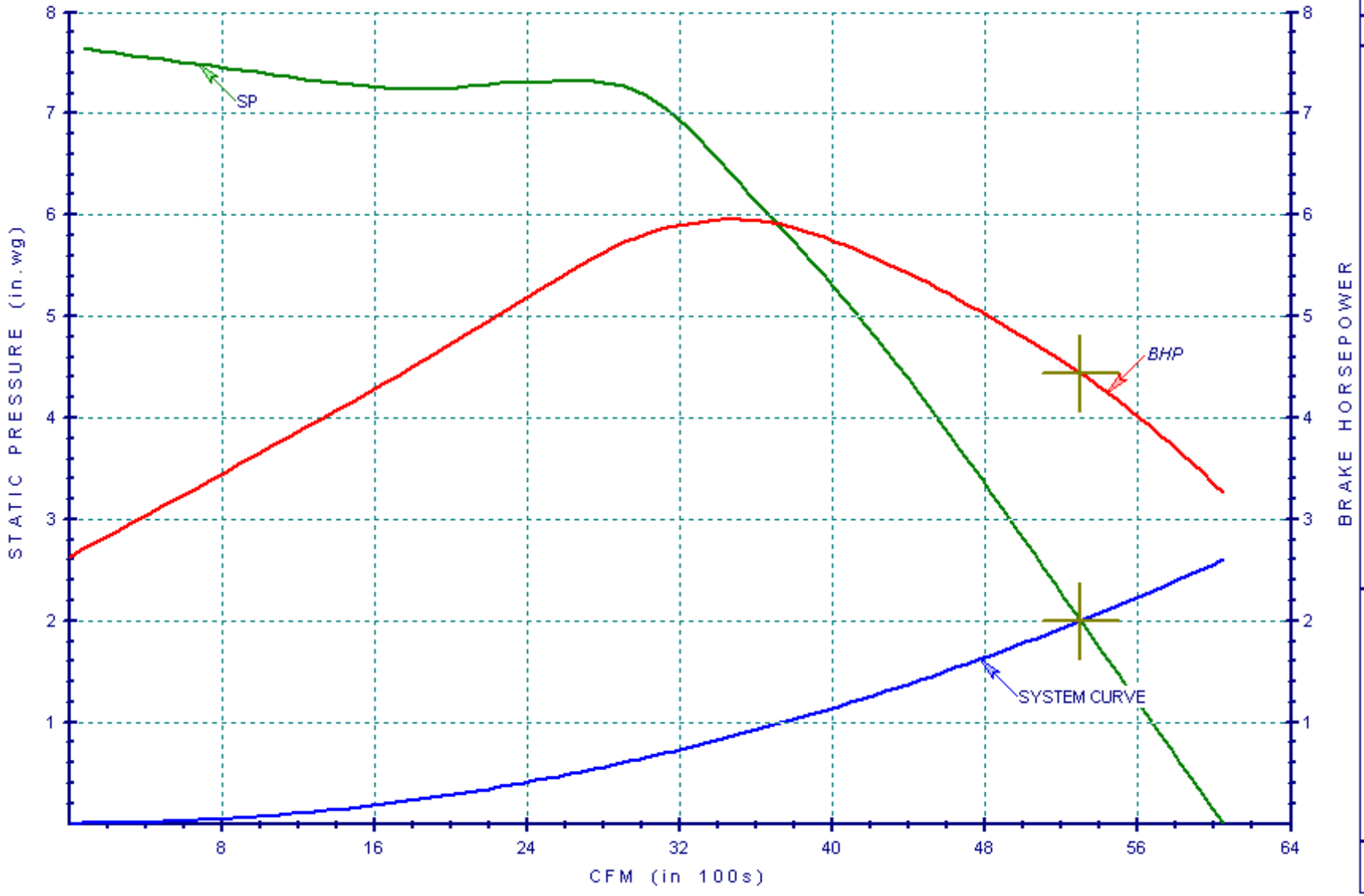

CFM:	5,300
SP:	2 in.wg
RPM:	3171
BHP:	4.44
Outlet Velocity:	2,727
Density:	0.075

Sound Power Level

Octave	In/Out
1	86 / 92
2	88 / 89
3	92 / 94
4	95 / 98
5	86 / 94
6	84 / 92
7	83 / 89
8	79 / 84

in db re 10^{-12} watts

1/2/2014

(Indicated as RTU-1 on TCE's Drawings)

U:CAD\DRAWINGS\FW_DJ

ProUnit

DOOR SIZES AND INTERNAL COMPONENTS ARE APPROX. VALUES. DIMENSIONS SHOWN IN INCHES ONLY UNLESS OTHERWISE NOTED.

DK6927 (RV655)
TAG: RTU-3

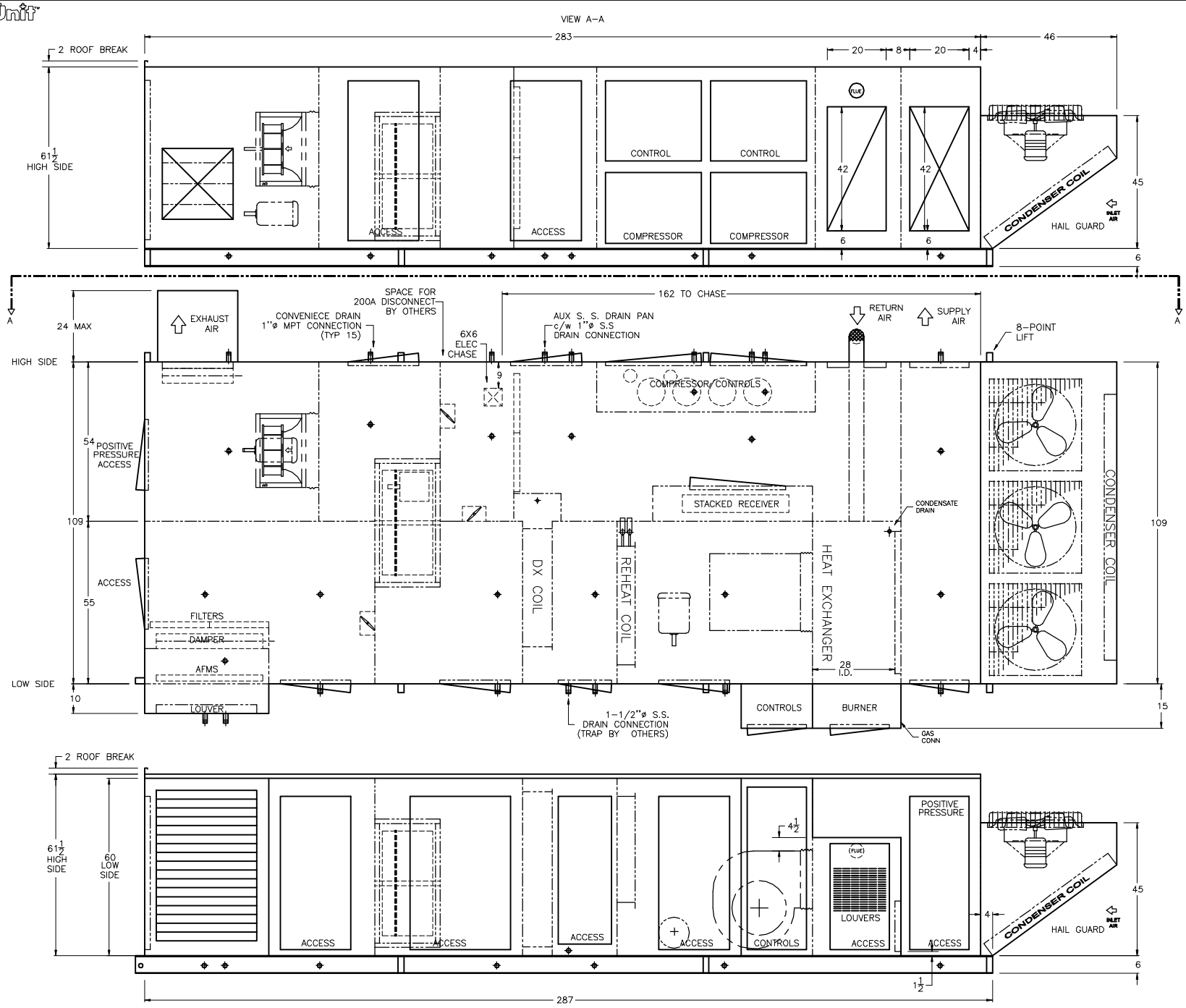

FW/DJ SERIES

FWE224/DJX40/HRW900/O/C/MV

REVISIONS:			
DATE: DEC 18 2013	DRWN BY: NSS	CHKD BY:	DRWG NO.: 06927M-03-1

ENGA ENGINEERED AIR

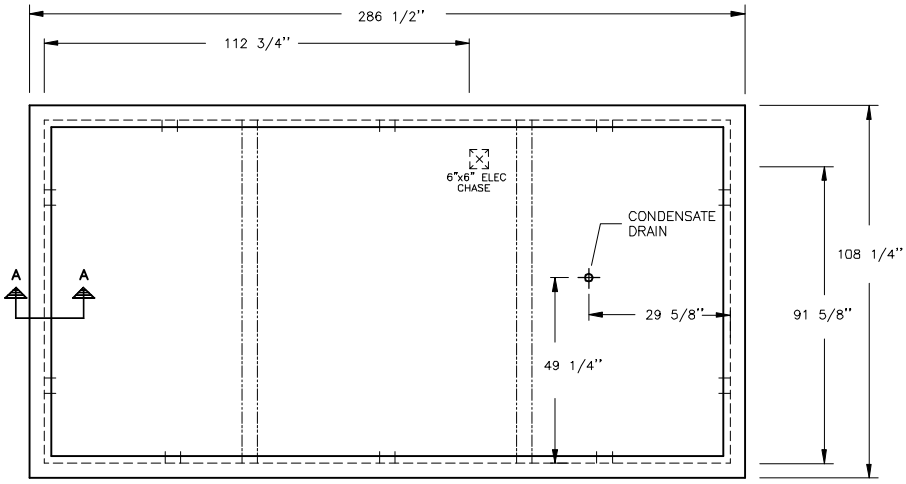

PLAN VIEW

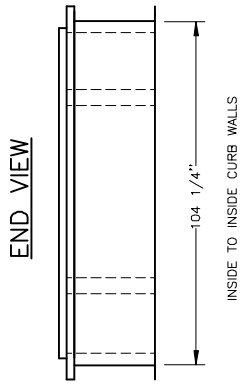

ELEVATION

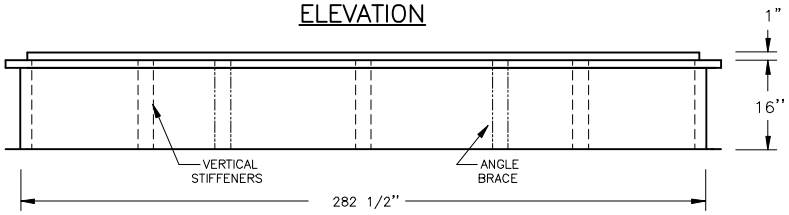

INSIDE TO INSIDE CURB WALLS

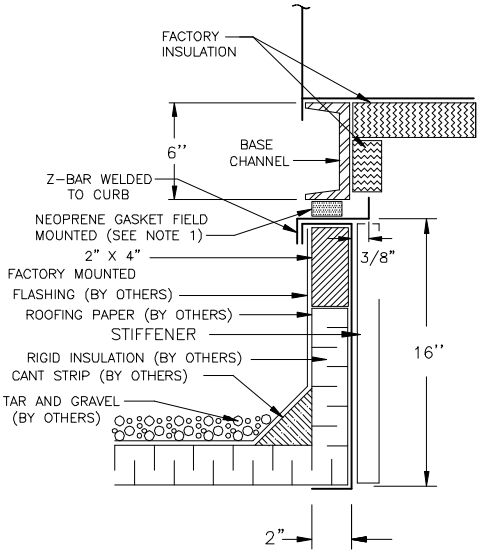

SECTION A–A

NOTES:

1. 3/8" X 3/4" NEOPRENE GASKET FOR 2" TO 4" CHANNELS, OR 3/8" X 1–1/2" NEOPRENE GASKET FOR CHANNELS 6" AND OVER.
2. CURB MAY BE BROKEN DOWN FOR SHIPPING. IN THESE CASES, FIELD ASSEMBLY WILL BE REQUIRED BY INSTALLING CONTRACTOR.
3. CONTINUOUS BASE SUPPORT TO CURB PANELS, INCLUDING THE CENTER SUPPORT PANEL IF SUPPLIED, IS REQUIRED BY OTHERS.
4. DIMENSIONS GIVEN IN INCHES ONLY

AutoCurb™ Phase II version 2.2.10

U:\CAD\DRAWINGS\FW_DJ

JOB# DK6927 DRAWING NOT TO SCALE FWE224/DJX40/HRW900/O/C/MV

TAG: RTU–3 (Indicated as RTU-1 on TCE's Drawings) 16" HIGH CURB FOR HORIZONTAL DISCHARGE UNITS

EngA® ENGINEERED AIR®

REVISIONS:			
DATE:	DRWN BY:	CHKD BY:	DRWG NO.:
JAN 02 2014	NSS		06927C–03–1

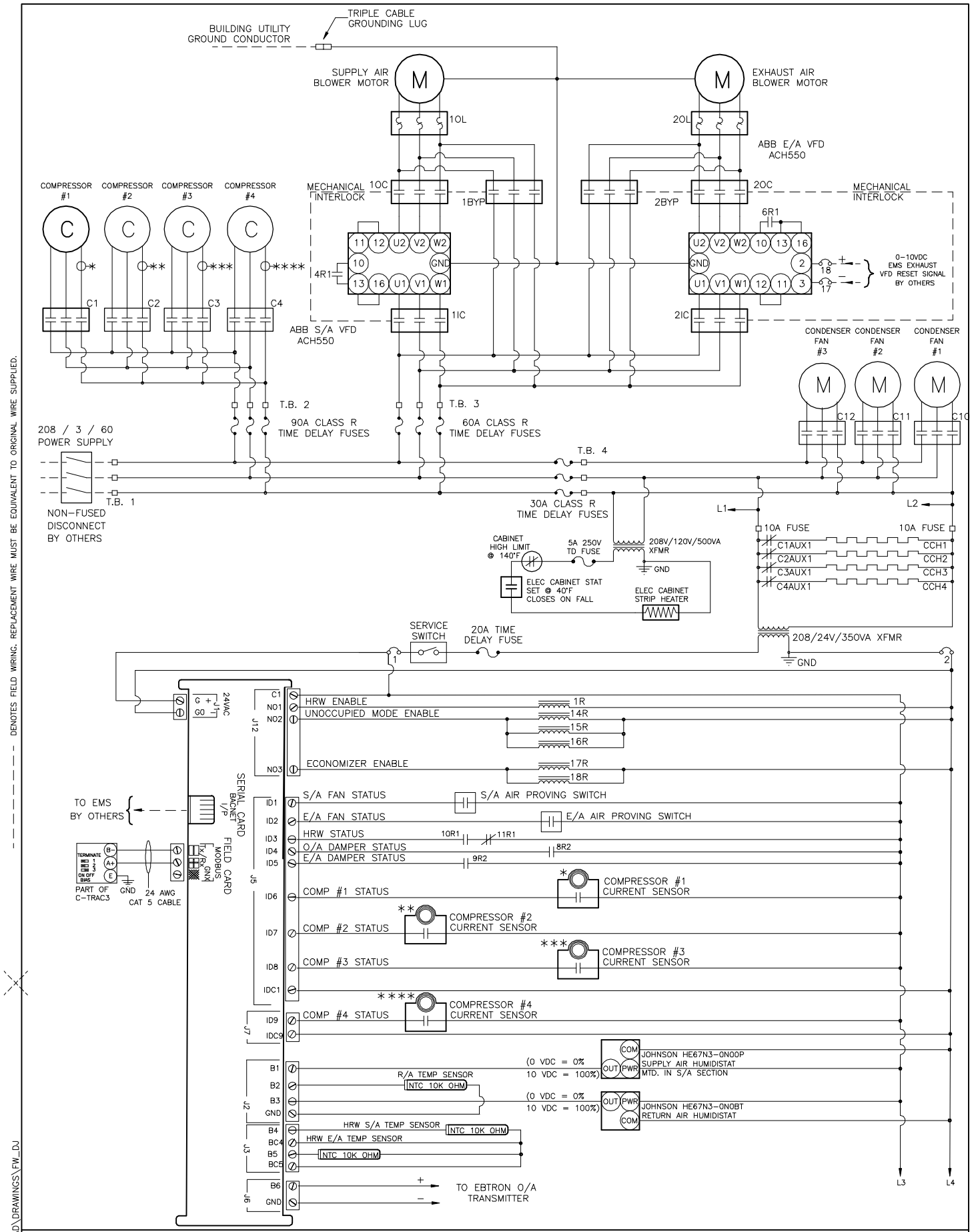

TAG: RTU-3 *(Indicated as RTU-1 on TCE's Drawings)*

PAGE 1 OF 3

INTERNAL WIRING
FW_DJ SERIES

EngA®

ENGINEERED AIR®

REVISIONS:			
DATE:	DRN.BY:	CHKD.BY:	DRWG.NO.:
JAN 3 2014	NSS		06927E-03-1

DK6927 (RV655) U:\CAD\DRAWINGS\FW_DJ

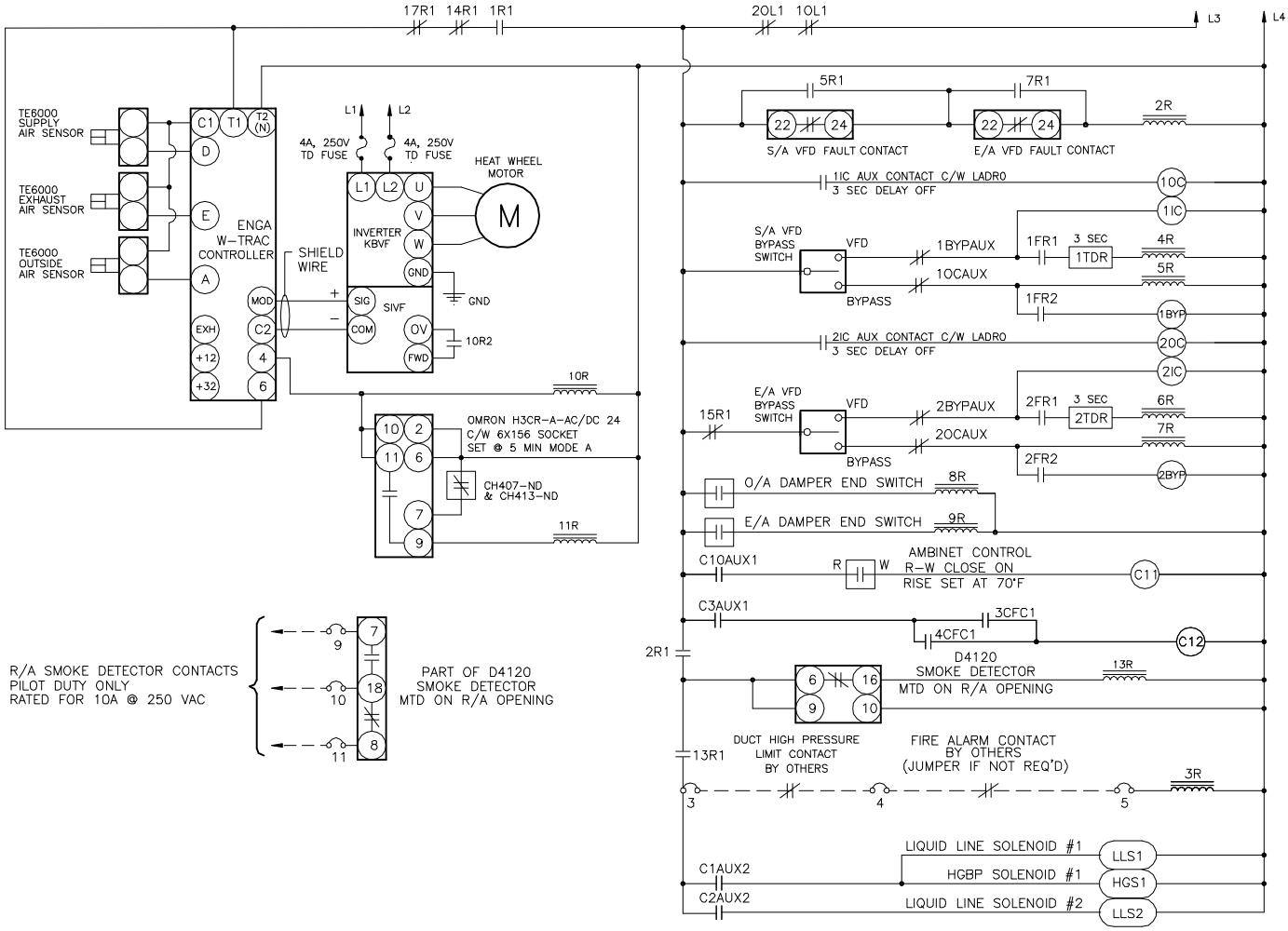

- - - - - - - - DENOTES FIELD WIRING. REPLACEMENT WIRE MUST BE EQUIVALENT TO ORIGINAL WIRE SUPPLIED.

TAG: RTU-3 *(Indicated as RTU-1 on TCE's Drawings)*

PAGE 2 OF 3

INTERNAL WIRING
FW_DJ SERIES

EngA®

ENGINEERED AIR®

REVISIONS:			
DATE:	DRN.BY:	CHKD.BY:	DRWG.NO.:
JAN 3 2014	NSS		06927E-03-2

DK6927 (RV655) U:\CAD\DRAWINGS\FW_DJ

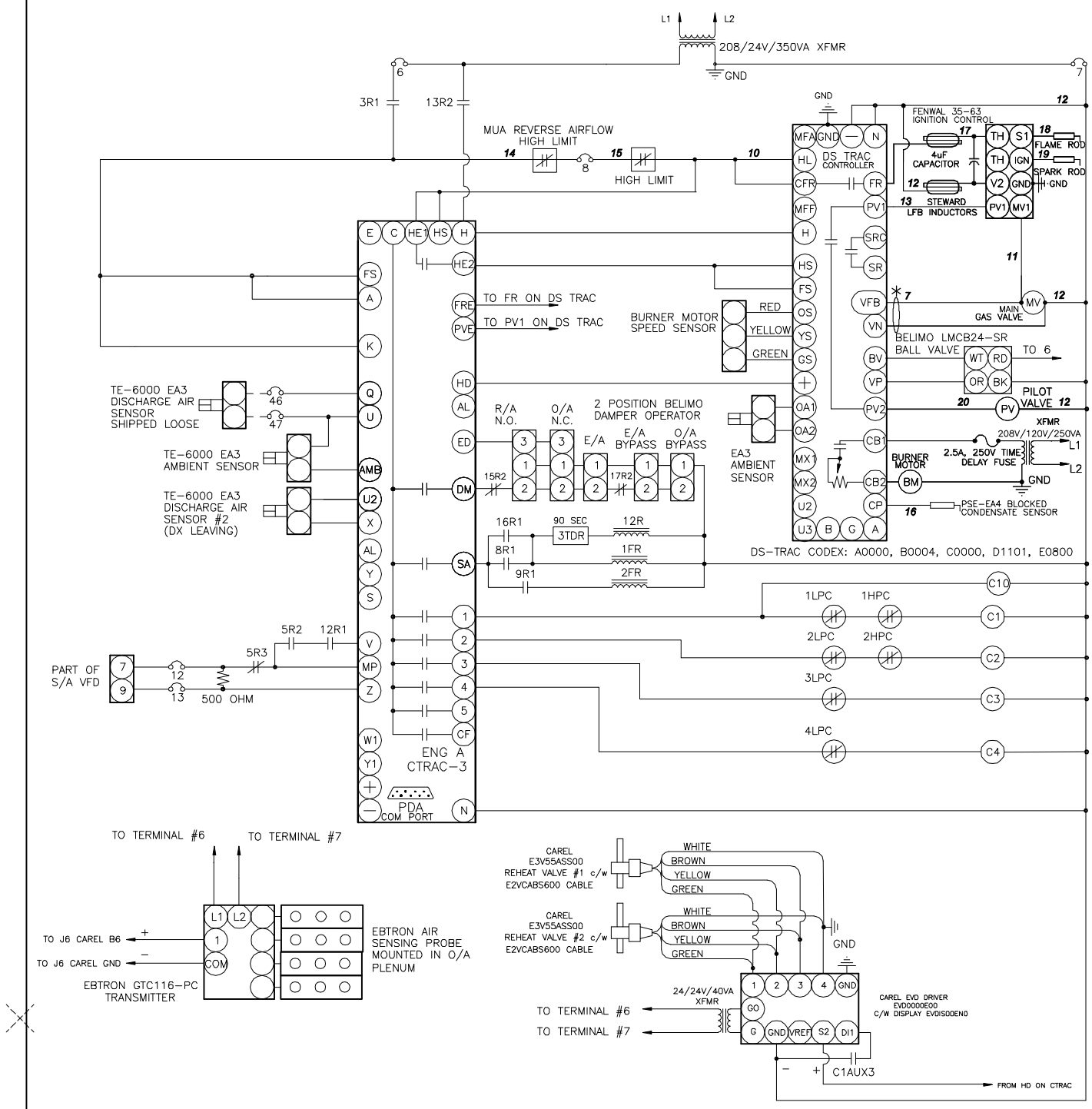

* RED FEEDBACK CABLE HOOKED DIRECTLY TO MAIN GAS VALVE.

PROGRAM #31

TAG: RTU-3 *(Indicated as RTU-1 on TCE's Drawings)*

PAGE 3 OF 3

INTERNAL WIRING
FW_DJ SERIES

EngA®

ENGINEERED AIR®

REVISIONS:			
DATE:	DRN.BY:	CHKD.BY:	DRWG.NO.:
JAN 3 2014	NSS		06927E-03-3

DK6927 (RV655) U:\CAD\DRAWINGS\FW_DJ

EngA ENGINEERED AIR

ELECTRICAL DATA

JOB NAME: GRAFTON BETHEL ES PHASE III] **JOB NO:** DK6927(RV655)

EngA MODEL: FWE224/DJX40/HRW900/O/C/MV **QTY:** 1 **TAG:** RTU-3

(Indicated as RTU-1 on TCE's Drawings)

Power Supply	Minimum Circuit Ampacity	Terminal Block to Accept	Maximum Fuse (Dual Element)	Maximum Breaker	Minimum Unfused Conductor
208 / 3 / 60	144.8 AMPS	0 Awg	150 AMPS	150 AMPS	6 Awg

Components	Circuit No	Model	Minimum Conductor Size	Ampacity FLA / LRA	SubFuse Group	Subfuse Group Fuse Size	Terminal Block to Subfuse
Supply Fan Motor	1	Super 'E' ODP (1750) 7 1/2 HP	12 Awg	22.2	1	60	8 Awg
Exhaust Fan Motor	1	Super 'E' ODP (3450) 5 HP	14 Awg	12.8			
Burner Motor(Xfmr)	1	PSC(Use Xfmr) 1/12 HP	14(14) Awg	1.32 @ 120/1/60	2	25	12 Awg
Condenser Fan Motors #1 to #3	1	OPAO 1 HP	14 Awg	3.9			
Crankcase Heaters (4 total)	1		14 Awg	.3			
Main Control Xfmr	1		14 Awg	1.7			
Control Xfmr #1	1		14 Awg	1.7			
Control Xfmr #2	1		14 Awg	4.8			
Heater Xfmr	1		14 Awg	2.4			
Compressors #1 to #4	1	ZR61KCE-TF5-250	8 Awg	18.6 / 128.0	3	90	4 Awg

UNIT CONTROL PANEL(S) SHORT CIRCUIT CURRENT RATING (SCCR)
Short circuit current 5 kA rms symmetrical, 208 V maximum

WIRING DRAWING LEGEND					
AFS	Auto Fan Switch	DM	Damper Motor	LAR	Low Ambient Relay
C	Contactor	FR	Fan Relay	NFD	Non Fused Disconnect
CCH	Compressor Crankcase Heater	GV1	Low Stage Gas Valve	OL	Thermal Overload
CFC	Condenser Fan Control	GV2	High Stage Gas Valve	OP	Oil Failure Switch
CLC	Compressor Loading Control	HR	Heating Relay	PV	Pilot Gas Valve
CPM	Compressor Protection Module	HLPC	High/Low Pressure Control	R	Relay or Contactor
CP	Internal Compressor Protection	HL	High Limit Control	SS	Sail Switch
CR	Cooling Relay	IGN	Ignition Control	TB	Terminal Block
CUC	Cylinder Unloading Control	LAC	Low Ambient Control	TDR	Time Delay Relay
CUS	Cylinder Unloading Solenoid	LPC	Low Pressure Control	TC	Time Clock

UNIT FUNCTION

CTRAC-3 Program #31

EMS HAS FULL CONTROL OF CTRAC-3

Non fused disconnect switch (by others) 'on', service switch 'on', VFD fault contacts 'closed', smoke detector contacts 'closed' (supplied by others, installed by EngA), duct high pressure limit (by others) 'closed', fire alarm contacts (by others) 'closed' (jumper if not required). EMS enable unit 'ON' (BV42). Outside air and exhaust air dampers 'open'. Damper end switches 'closed', the blowers are enabled and run continuously c/w supply air VFD for air balancing only and exhaust air VFD vary to 1,380 CFM minimum airflow and 15.6 Hz operating frequency.

EMS HRW enable 'on' (BV001), the WTRAC with an adjustable integral set point set at 55°F will modulate the wheel rotation speed to maintain the heat wheel supply air leaving temperature. The heat/cool/vent changeover will automatically switch between heating, cooling, and venting modes as required. WTRAC reduces wheel rotation speed in frost control mode to prevent frost formation.

(Continued on second page) **DATE:** 17-JAN-2014 **SUBMITTED BY:** STEVE JONES / NSS

EngA ENGINEERED AIR

ELECTRICAL DATA

JOB NAME: GRAFTON BETHEL ES PHASE III] **JOB NO:** DK6927(RV655)

EngA MODEL: FWE224/DJX40/HRW900/O/C/MV **QTY:** 1 **TAG:** RTU-3

(Indicated as RTU-1 on TCE's Drawings)

UNIT FUNCTION CONTINUED

The C-TRAC3 controller, with an adjustable discharge air setpoint from EMS (AV25), will modulate the heating or cooling (and cycle 4 stages of compressors) to maintain the required discharge air temperature from 50°F to 90°F.

EMS cool mode enabled

If there is a call for cooling (BV47), the C-TRAC3 will begin staging on the mechanical cooling. The DX coil leaving temperature control band is from 50°F to 90°F, controlled via EMS cooling setpoint signal (AV25). Mechanical cooling is locked out below 50°F ambient temperature

EMS heat mode enabled

If the C-TRAC3 is in heating mode (BV48) and there is a call for heating, the C-TRAC3 will close the HE contacts and output a 0 - 10 vdc modulating heating signal directly to the DS-TRAC heating controller to operate all aspects of burner operation. The discharge temperature will be controlled via EMS D/A setpoint signal (AV25), and the discharge air temperature control band is from 50°F to 90°F. Gas heating is disabled above 120°F ambient temperature.

EMS Economizer Mode Enabled

In economizer mode (BV45 and BV009), heat wheel 'off' (BV001) the supply and exhaust air bypass dampers will 'open'. The C-TRAC3 will modulate the outside and recirc dampers to maintain the required discharge air temperature. The outside air damper minimum position is set at 33% outside air (AV1045) . When economizer is disabled (BV45 and BV009), -or- above 68°F ambient temperature -or- when in cooling -or- heating mode minimum position at 33% outside air (AV1045). When in economizer mode the discharge air temperature control band is from 50°F to 90°F.

EMS dehumidification mode enabled

When in dehumidification mode (BV43), the C-TRAC3 will enable the cooling to maintain the desired leaving DX coil temperature set by EMS signal (AV27) to achieve the required room relative humidity. The gas and condenser heating is also enabled for reheat to satisfy the required discharge air temperature (AV25).

EMS unoccupied mode enabled

When in unoccupied mode (BV002), the Heat Wheel will be 'off', the outside air and exhaust air dampers will be 'off'. Exhaust air fan will be 'disabled'. Unoccupied mode is only for dehumidification mode.

EMS enable unit 'OFF' (BV42), C-TRAC3 begins shutdown cycle, dampers close, blowers delay off and shut down. If the fire alarm contacts 'open' -or- smoke detector contacts 'open' (supplied by others, installed by EngA) '-or- duct high pressure limit contact 'open', equipment operation is disabled immediately. If the discharge air temperature falls below 40°F, the C-TRAC3 will shut down fans, close dampers and indicate alarm.

Refer to the C-TRAC3 face mounted LED's for mode indication and status.

Note 1. Compressor(s) cycle has minimum run time, minimum off time and interstage timing.

Note 2. Refer to manuals shipped with unit for more detailed explanation of maintenance, components and controls.

Note 3. Go to www.engineeredair.com/manuals/manuals.asp for online manual details.

Note 4. VFDs are equipped with external bypass and will be sent to 60hz.

BACNET control and status variable points list: (See C-TRAC3 BACnet IO&M for additional points)

DATE: 17-JAN-2014 **SUBMITTED BY:** STEVE JONES / NSS

EngA ENGINEERED AIR

JOB NUMBER: DK6927 (RV655)

TAG: RTU-3

Network Control Variable List - C-TRAC3 BACnet

(Indicated as RTU-1 on TCE's Drawings)

Variable	Description	Note
BV36	Air Flow Problem	R
BV26	Ambient Sensor Alarm	R
AV11	Ambient Temperature	R
BV10	Blower Status	R
BV13	Cooling Lockout - Low Ambient Temperature	R
BV5	Cooling Mode - A	R
AV18	Cooling Modulated Output	R
AV17	Cooling Stages % On	R
BV50	Cooling Status - Mechanical Cooling On/Off	R
AV19	Damper % Open	R
BV16	Damper Contact DM closed	R
AV7	Damper Minimum Position	R
BV11	Damper Override Low Discharge Temperature	R
BV19	Discharge Air Low Limit Lockout	R
BV24	Discharge Air Sensor Alarm	R
AV12	Discharge Air Temperature	R
AV14	Discharge Air Temperature Setpoint	R
BV22	DJ or DG Flame Failure Alarm	R
BV21	DJ or DG Prepurge Alarm	R
BV17	Economizer At Minimum Due to High Ambient	R
BV15	Economizer Mode	R
BV6	Economizer Mode - E	R
BV47	EMS Cooling Enabled	R/W
AV1045	EMS Damper Minimum Position Setpoint	R/W
BV43	EMS Dehumidification Enabled	R/W
AV25	EMS Discharge Air Setpoint	W
AV26	EMS Discharge Air Setpoint	R
BV45	EMS Economizer Enabled	R/W
BV48	EMS Heating Enabled	R/W
AV27	EMS Secondary Discharge Air Setpoint	W
AV28	EMS Secondary Discharge Air Setpoint	R
BV42	EMS Unit Command On/Off	R/W
BV14	External Cooling Lockout - A	R
BV41	Heat Fail Lockout	R
BV20	Heat Failure Lockout	R
BV40	Heating Lockout High Ambient Temperature	R
BV7	Heating Mode - HS	R
AV20	Heating Modulating % Output	R
BV39	Heating Status	R
BV23	LMK or HE Failure Alarm	R
BV4	Occupied Mode - FS	R
BV25	Secondary Discharge Air Sensor Alarm	R
AV13	Secondary Discharge Air Temperature	R
BV35	Sensor Failure Alarm	R

DATE: 1/16/2014

SUBMITTED BY: NSS

EngA® ENGINEERED AIR®

JOB NUMBER: DK6927 (RV655)

TAG: RTU-3

Network Control Variable List - C-TRAC3 BACnet

(Indicated as RTU-1 on TCE's Drawings)

Variable	Description	
AV1044	Unit On/Off Status	R
BV8	Unoccupied Mode - K	R
Bv18	VFD Cooling Lockout - Limit Stages due to Low Air Volume	R
AV10	VFD Speed Feedback	R
BV49	Write to Flash	R/W
ADDITIONAL POINTS	----------	
AV001	Supply Air Humidity	R
AV002	Return AIr Temperature	R
AV003	Return Air Temperature	R
AV004	Heat Wheel Supply Temp	R
AV005	Heat Wheel Exhaust Temp	R
AV006	Outside Air CFM	R
BV003	Supply Air Fan Status	R
BV058	Exhaust Air Fan Status	R
BV059	Heat Wheel Status	R
BV060	Outside Air Damper Status	R
BV061	Exhaust Air Damper Status	R
BV062	Compressor 1 Status	R
BV063	Compressor 2 Status	R
BV064	Compressor 3 Status	R
BV065	Compressor 4 Status	R
BV001	Heat Wheel Enable	R/W
BV002	Unoccupied Enable	R/W
BV009	Economizer Enable	R/W

DATE: 1/16/2014

SUBMITTED BY: NSS

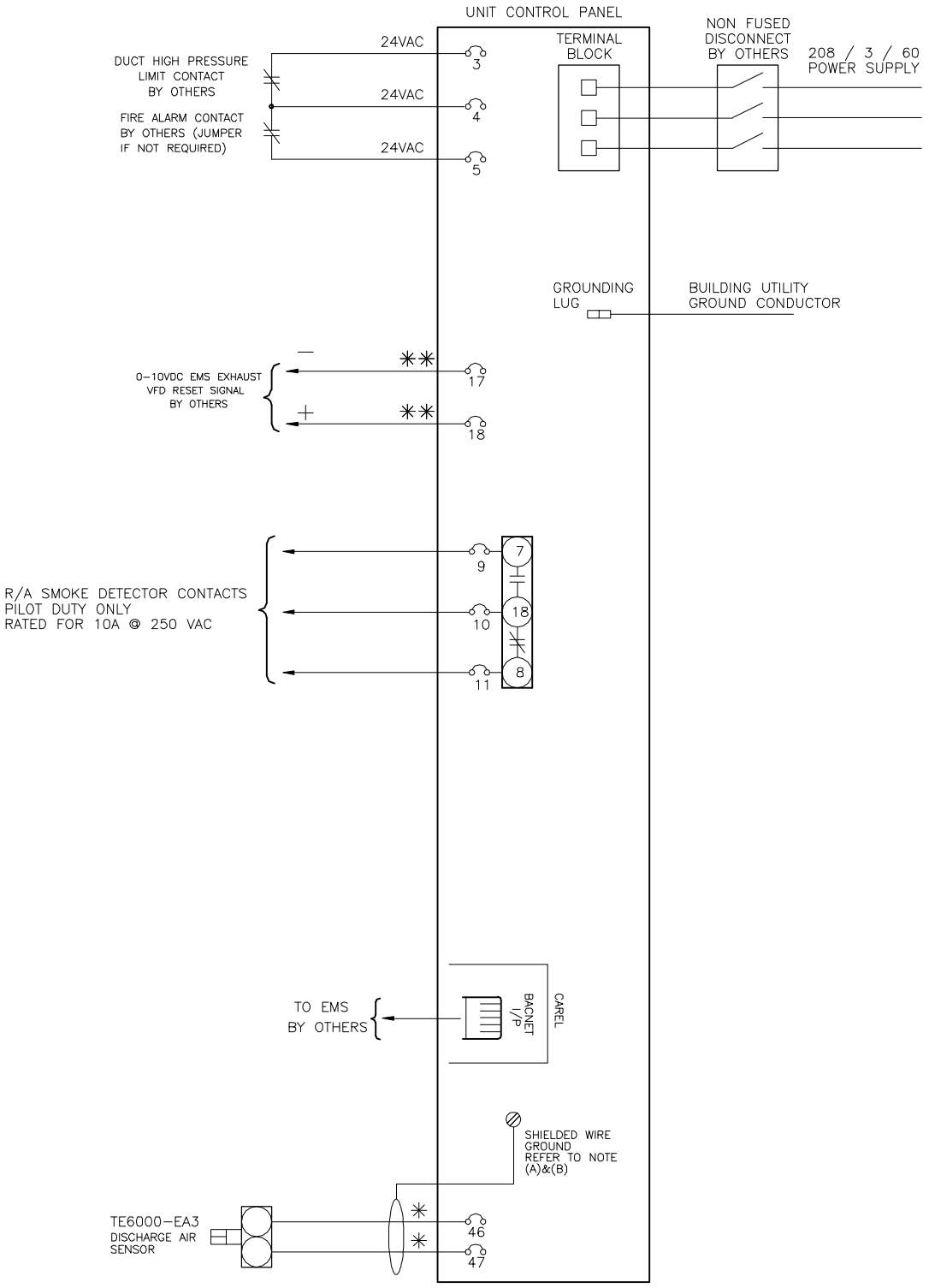

MAXIMUM CONTROL CIRCUIT AMPACITY 14.6 AMPS AT 24 VAC

✳✳ SHIELDED WIRE IS REQUIRED WITH BMS ANALOG SIGNALS.
TAPE OTHER END OF GROUND WIRE & SHIELD ENDS OF ANY UNUSED WIRES.

✳ SHIELDED WIRE IS REQUIRED WITH ELECTRONIC COMPONENTS.

(A) SHIELDED WIRE TO BE GROUNDED AT MAIN ENG A CONTROL CABINET END ONLY.
TAPE OTHER END OF GROUND WIRE & SHIELD ENDS OF ANY UNUSED WIRES.

(B) ENGINEERED AIR STRONGLY RECOMMENDS THAT THE SHIPPED LOOSE DISCHARGE AIR SENSOR BE MOUNTED 5-10 FT. DOWN STREAM OF HEAT EXCHANGER DISCHARGE OPENING TO AVOID TEMPERATURE SWING CAUSED BY RADIANT HEAT.

1. FIELD WIRING VOLTAGE DROP NOT TO EXCEED 10%.
2. ALL WIRING SHOWN SHALL BE COMPLETED BY INSTALLER.
3. ALL WIRING TO COMPLY WITH THE NATIONAL ELECTRICAL CODE.

FIELD WIRING DIAGRAM

TAG: RTU-3 *(Indicated as RTU-1 on TCE's Drawings)*

FW_DJSERIES

EngA®

ENGINEERED AIR®

REVISIONS:			
DATE:	DRN.BY:	CHKD.BY:	DRWG.NO.:
JAN 8 2014	NSS		06927F-03-1

DK6927 (RV655) U:CAD\DRAWINGS\FW_DJ

EngA ENGINEERED AIR

SUBMITTAL RECORD

JOB NAME: GRAFTON BETHEL ES PHASE III] **JOB NO:** DK6927(RV655)

CUSTOMER: YORK COUNTY SCHOOLS **ENGINEER:** THOMPSON CONSULTING ENGINEERS

EngA MODEL: FWE63/DJX20/O **QTY:** 1 **TAG:** RTU-4

SHIPPING AND APPROVAL INFORMATION

(Indicated as RTU-2 on TCE's Drawings)

MOUNTING Outdoor Base Mounted c/w Prefab Roof Curb **ACCESS** As Per Drawing

UNIT MINIMUM AMBIENT -20°F **SHIPPING WEIGHT** 3200 lb **OPERATING WEIGHT** 3400 lb

NO. OF PIECES 3 (Unit + Curb + Hood)

- ETL approval.
- Operating weight includes curb.

SUPPLY AIR DATA

AIR FLOW 1,700 CFM **FAN SIZE** (1) 9/9 FC DIDW **TSP** 2.6 in w.c. **RPM** 1808

MOTOR SIZE 1 1/2 HP **TYPE (RPM)** Super 'E' ODP (1750) **ESP** 0.75 in w.c. **BHP** 1.26 BHP

- Supply air fan/motor c/w spring vibration isolation and pillow block bearings.
- Unit mounted ABB adjustable speed drive (air balancing only) c/w integral line reactors, vented control cabinet, control cabinet heater and manual bypass.

AIR OPENING DATA

AIR OPENING	LOCATION	DAMPER TYPE	OPERATION
SUPPLY AIR	See Below [1]		
RETURN AIR	See Below [1]	RUSKIN CD-50 Low Leakage Aluminum Air-foil Parallel Blade	Modulating
OUTSIDE AIR	See Below [1]	RUSKIN CD-50 Low Leakage Aluminum Air-foil Parallel Blade	Modulating
EXHAUST AIR	See Below [1]		

- [1] - See Mechanical Drawing
- Ebtron Gold Outside Airflow Monitoring Station.

CONSTRUCTION DATA

UNIT CABINET 18 gauge satin coat galvanized sheet metal c/w 2" 3 lb/ft³ insulation on entire unit casing.

UNIT LINER 22 gauge solid liner throughout but not including unit underside.

UNIT FLOOR 18 gauge satin coat galvanized sheet metal on entire unit floor.
Floor c/w floor drain connection through base frame (see mechanical drawing for locations)

EXTERIOR PAINT DTM Polyurethane paint finish (color to be advised) on all exterior surface but not including unit underside.

AIRSIDE DOOR All access - deluxe welded steel framed hinged c/w lever type door handles , stainless steel piano hinges, handles interlocked, and bulb seal gasket.

SERVICE DOOR Electrical, burner and compressor access - hinged c/w lever type door handle

DRAIN PAN 18 gauge 304L stainless steel drain pan c/w floor drain connection through casing on DX coil section and DX coil header section.

- Expanded steel grating over return air floor opening.
- EngA drainable weather louvre(s) c/w 1" bird screen.
- 6" x 6" electrical chase.
- Humid Climate Construction c/w slope roof.

ELECTRICAL DATA

POWER SUPPLY	MINIMUM CIRCUIT AMPACITY	MAXIMUM FUSE(D.E.)	MAXIMUM BREAKER
208 / 3 / 60	40.9 AMPS	45 AMPS	45 AMPS

- See Electrical Data Sheet for details.
- Smoke detecter provided by others. Installed by EngA mounted on return air opening.
- MCA based on ABB VFD amps for supply motor.

DATE 17-Jan-2014

Continued on page 2

EngA ENGINEERED AIR

SUBMITTAL RECORD

JOB NAME: GRAFTON BETHEL ES PHASE III] **JOB NO:** DK6927(RV655)

EngA MODEL: FWE63/DJX20/O **QTY:** 1 **TAG:** RTU-4

SUPPLY FILTER SECTION DATA - Side Loaded

(Indicated as RTU-2 on TCE's Drawings)

FILTER TYPE	Pleated Filter with MERV 8 rating c/w Metal Frame		
QTY/SIZE	1 - 24 x 24 x 2"	**QTY/SIZE**	
TOTAL GROSS AREA	4.00 SQ.FT.	**FACE VELOCITY**	425 FPM

- Filters may be shipped loose or mounted in the tracks.
- 1 spare set of filters - shipped loose

BURNER HEATING DATA - INDIRECT FIRED (DJX-20)

POWER BURNER	EngA 'HT' Series	**HEAT EXCH. MATERIAL**	Stainless Steel		
FUEL	Natural Gas	**INLET PRESSURE**	7 in wc.	**GAS FIELD CONN.**	0.75"
HEAT INPUT	100,000 Btuh	**HEAT OUTPUT**	90,000 Btuh	**TEMP. RISE**	49.0 °F

- EngA (15 : 1) high turndown burner
- Three pass heat exchanger c/w condensate drain connection. Condensate drain piping must be fully piped to a suitable drain before starting unit.
- Heat exchanger section has 1" 1.5 lb/ft³ insulation with 22 gauge solid liner
- Modulating combustion air and gas control.
- Heating is controlled by CTRAC controller.
- Condensate drain connection through curb. See roof curb drawing for details..

AIR COOLED DX SYSTEM DATA

COIL SIZE	22.5 x 28 x 6R x 12 FPI			**VELOCITY**	389 FPM
CAPACITY	68,900 Btuh			**AIR P.D.**	0.63 in.wc.
ENTERING AIR DB / WB	79.1°F / 65.8°F			**LEAVING AIR DB / WB**	52.5°F / 52.2°F
DESIGN AMBIENT TEMP	95°F	**SST/SCT**	47.1°F / 113°F	**REFRIGERANT TYPE**	R-407C
COMPRESSOR TYPE	Hermetic Scroll	**MODEL**	ZR21K5E-TF5-130	**QUANTITY**	3

- DX cooling coil c/w alternate tube circuiting, hot gas bypass on lead compressor circuit and stainless steel drain pan.
- CTRAC discharge air control c/w EMS reset - provides 3 stages of mechanical cooling modulates economizer for free cooling and interfaces with heating control.
- CTRAC Integral low limit auto bypass; set @ 40°F.
- Mechanical cooling operates down to 50°F ambient temperature.
- DX coil compressor circuits c/w insulated suction line, TX valve, sight glass, low pressure control and liquid line filter/drier.
- Condenser coil c/w hail gaurd.

SHIPPED LOOSE ITEMS (See filter section for filters and spare filters)

1 - Pre fabricated roof curb (See drawing for details).
1 - Exhaust hood c/w 1" birdscreen.
1 - Flue Diverter
1 - DJX condensate drain pipe - 42"
1 - Axiom NT25 Tank Condensate Neutralization
1 - Discharge Air Temperature Sensor

EngA ENGINEERED AIR

PACKAGED AIR COOLED SYSTEM PERFORMANCE DATA - EEV UNIT

Version 3.4.3E

Job Name: _____ **Job No.:** 6927 (RV655)

Customer: _____ **Tag No.:** _____

Location: Richmond, VA **Altitude:** 0 feet

(Indicated as RTU-2 on TCE's Drawings)

Coil Tag	RTU-4 FIN
Unit Model	FWE63
Compressor Qty & Model(s) [Refrigerant]	(3) ZR21K5E [R-407C]
Summer Ambient / Roof Effect, °F	92.0 / 15.0
Cond. Coil Size, in (H x L x R x FPI)	(1 @ 53) x 55 x 3R 14 (3/8" c/w 1" space)
Cond. Header Qty. & Size, in	(3) 7/8
Cond. Coil Circuiting / Ton/Circ (Ton)	25P - 6C - 9(subC + B) / 0.96
Cond. Fan Qty & Type or BHP, Eff.	(1) 26E c/w 0.75 HP
Cond. Tube PD, PSI / Comp HOC	5.6 / 1.26
Cond. Fx / Airflow, CFM, PD, in.wc.	0.79 / 6210, 0.09
DX Coil Size, in (H x L x R x FPI)	22.5 x 28 x 6R 12 (Alternate)
DX Coil Size, mm (H x L x R x FPI)	-
DX Coil Circuiting	18P - 6C - 0B
Header Qty. & Size, in	(3) 7/8
DX Tube PD, PSI / Velocity, FPM	1.8 / 1243.8
Distributors Qty. & Size	(3) 4-3-2
Distributors Pressure Drop, PSI	48.0
Distributors Nominal Load (%)	126
# of HGBP / Ton/Circ (Ton)	1 / 0.96
Design Ambient, °F DB	95.0
Net Capacity, MBH	68.9
Total / Sensible Capacity, MBH	68.9 / 48.9
Air Flow Conditions	Standard CFM
Total / DX Air Flow, CFM	1700 / 1700
Air EDBT, °F / EWBT, °F	79.1 / 65.8
DX LDBT / LWBT, °F	52.5 / 52.2
D/A LDBT / LWBT, °F	52.5 / 52.2
Water Removal, lb/h	17.7
Drain Pan, in / No. of Mid. Pan	6 / 0
Leaving Coil Velocity, AFPM	378
Coil Pressure Drop, in.wc.	0.63
SST / SCT, °F	47.1 / 113.0
S/A Motor Information	0 BHP @ 82% Draw Thru
R/A Motor Information	
EER/ IEER Under design condition	-
CSA C746-06 EER	11.20
AHRI 340/360-2007 EER / IEER	11.2 / 11.4
Notes	2,6

Notes:
[2] The coil performance data is based on R-407C refrigerant.
[6] Mixed air application.

Submitted By: NSS Date: 12/19/2013

RTU-4

(Indicated as RTU-2 on TCE's Drawings)

MODEL A9-9A

Selection Input	Input Flow 1700 CFM	Input Pressure 2.60 in-wg	Temperature 70 F	Altitude 0 ft	Q Derate 0 CFM	P Derate 0.00 in-wg	VAV Set Point 0.00 in-wg		Date 01-02-2014
Selection Output	Flow 1700 CFM	Pressure 2.60 in-wg	Power 1.25 hp	Static Efficiency 55.5 %	Total Efficiency 60.7 %	Speed 1807 rpm	Outlet Velocity 2033 fpm		
	Impeller Diameter 9.0 in	Outlet Area 0.84 ft²	Max Speed 2223 rpm	AMCA Class I	Drive Belt Drive	Blades 43	P Volume 2.0 ft³	Turndown 100 %	

Performance

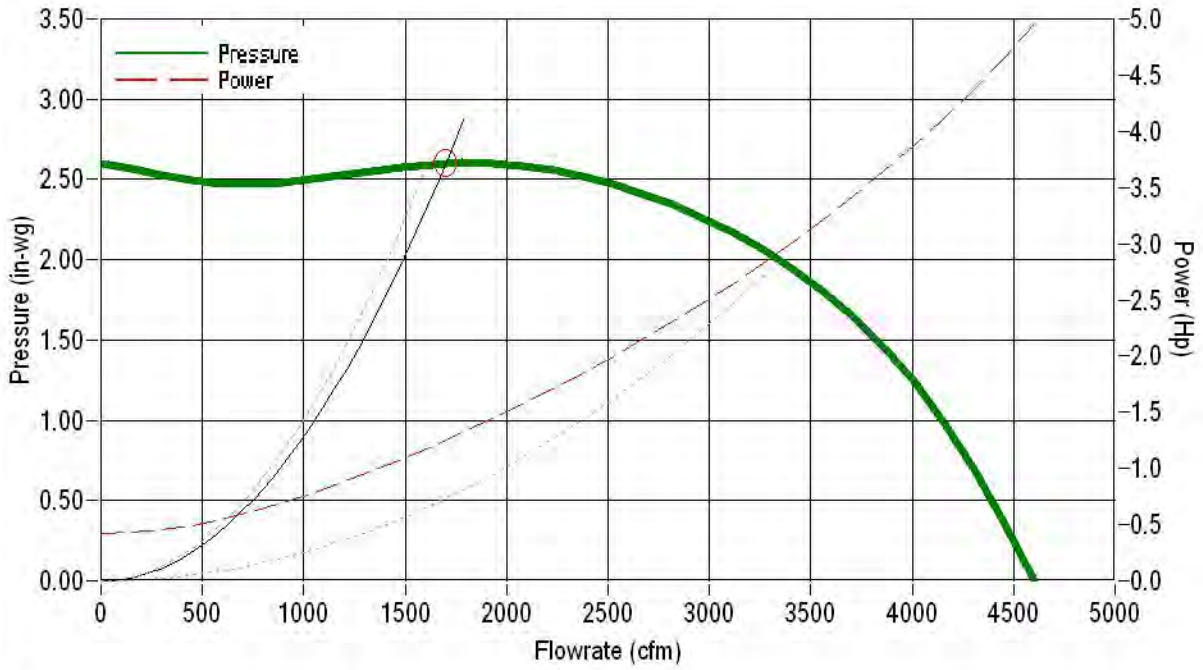

Sound (Lwi)	63	125	250	500	1000	2000	4000	8000	Lw	LwA
	83	84	80	78	76	77	74	72	89	83

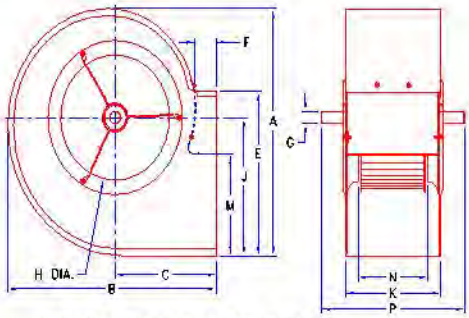

DIMENSIONS SHOWN ARE FOR REFERENCE ONLY.

A	B	C	E	F	G	H	J	K	M	N	P
15.44	14.94	7.19	10.25	1.50	0.75	7.81	8.62	11.81	6.31	10.00	15.25

Dimensions in inches

Notes: Airflow performance data are obtained in accordance with AMCA 210-07. Installed performance will vary depending on extent of cabinet geometry

Sound data are estimated from industry experience for the type of product selected. Data should be used for comparison purposes only and do not represent installed values.

Options

Available Bore: 3/4, 1 and 1-3/16 inch
Center disc lock style: Preslok
Three Piece bearing bracket (Max 3HP) available for 9 - 15" blowers
One piece bearing bracket (Max 10HP) available for 12 - 18" blowers
Standard motor mounting bracket (3/4HP Max) or Reinforced motor mounting bracket (1 1/2Hp Max)

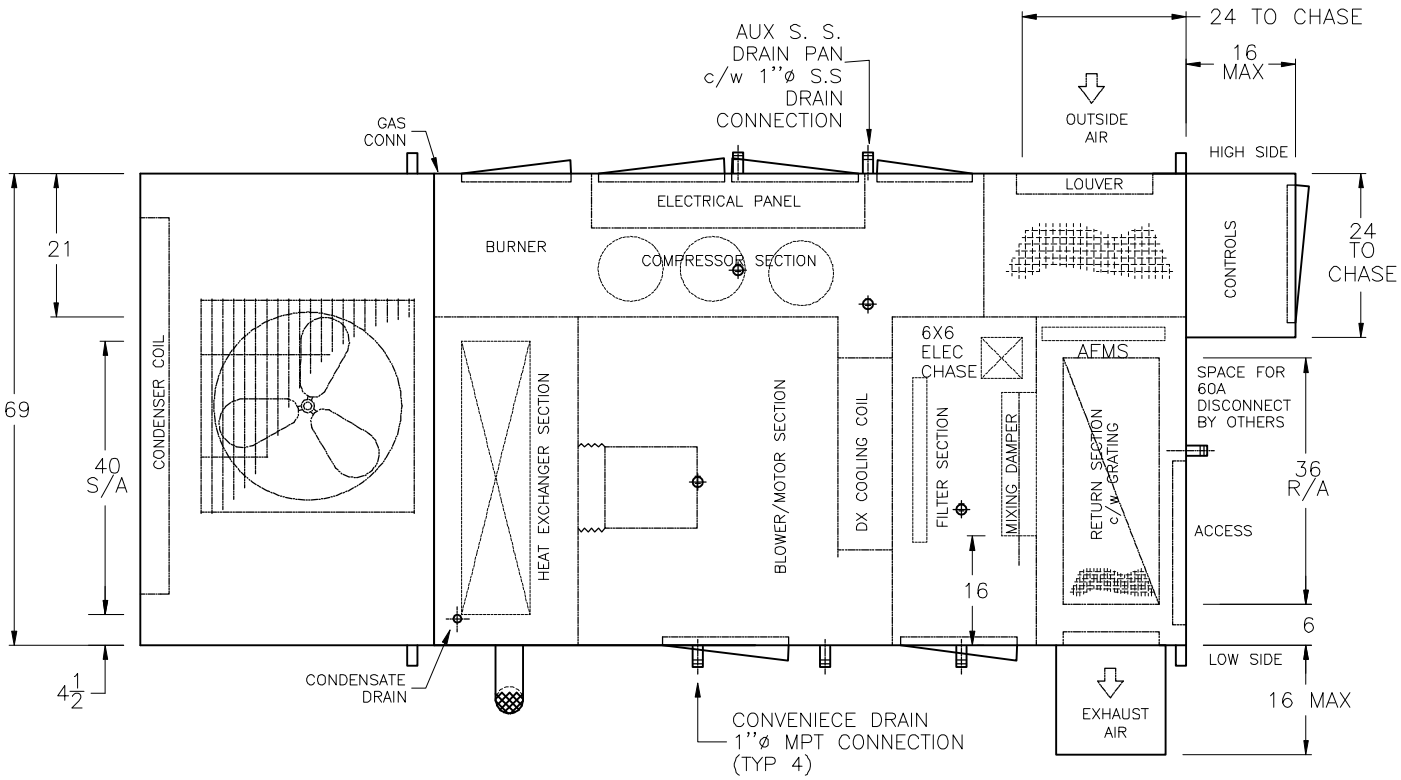

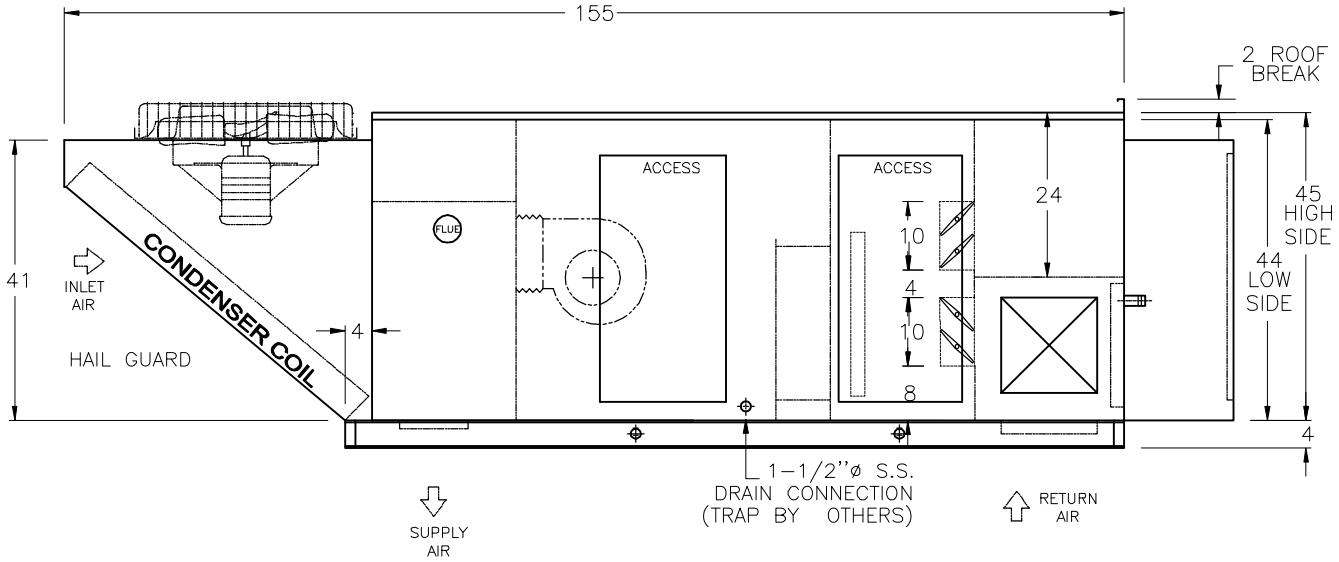

DOOR SIZES AND INTERNAL COMPONENTS ARE APPROX. VALUES. DIMENSIONS SHOWN IN INCHES ONLY UNLESS OTHERWISE NOTED.

DK6927 (RV655)

TAG: RTU-4 *(Indicated as RTU-2 on TCE's Drawings)*

FWE63/DJX20/O/MV

HEAT/COOL UNIT

EngA® ENGINEERED AIR®

REVISIONS:			
DATE: DEC 18 2013	DRWN BY: NSS	CHKD BY:	DRWG NO.: 06927M-04-1

ProUnit™

U:\CAD\DRAWINGS\FW_DJ

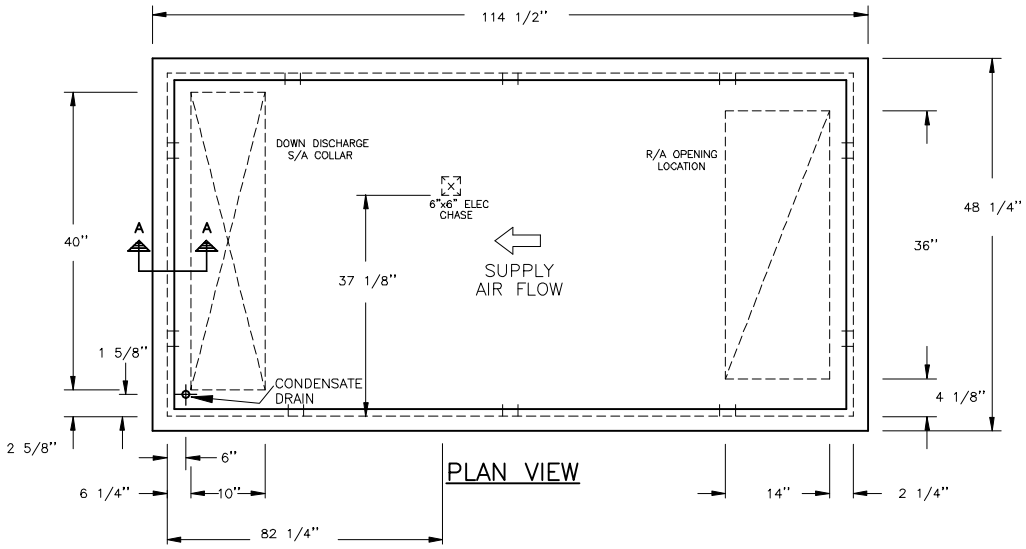

PLAN VIEW

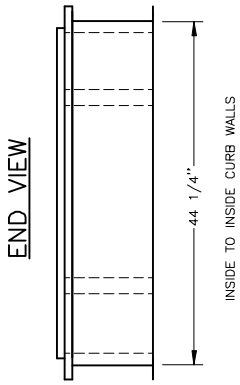

END VIEW

ELEVATION

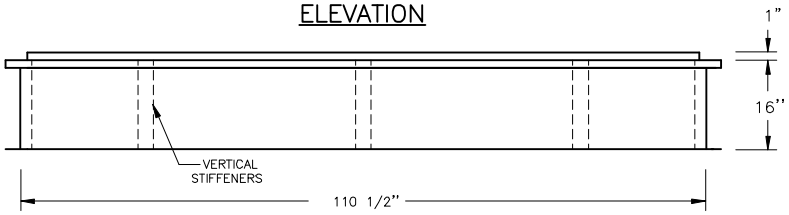

INSIDE TO INSIDE CURB WALLS

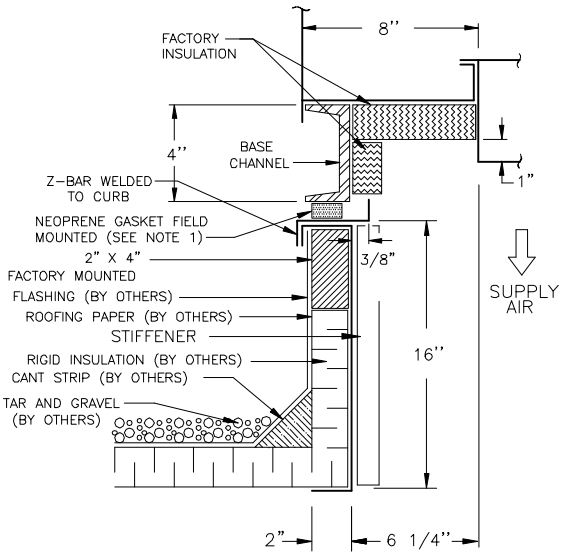

SECTION A–A

NOTES:

1. 3/8" X 3/4" NEOPRENE GASKET FOR 2" TO 4" CHANNELS, OR 3/8" X 1–1/2" NEOPRENE GASKET FOR CHANNELS 6" AND OVER.
2. CURB MAY BE BROKEN DOWN FOR SHIPPING. IN THESE CASES, FIELD ASSEMBLY WILL BE REQUIRED BY INSTALLING CONTRACTOR.
3. CONTINUOUS BASE SUPPORT TO CURB PANELS, INCLUDING THE CENTER SUPPORT PANEL IF SUPPLIED, IS REQUIRED BY OTHERS.
4. DIMENSIONS GIVEN IN INCHES ONLY

AutoCurb™ Phase II version 2.2.10

U:\CAD\DRAWINGS\FW_DJ

JOB# DK6927

TAG: RTU–4

DRAWING NOT TO SCALE

FWE63/DJX20/O/MV

(Indicated as RTU-2 on TCE's Drawings)

16" HIGH CURB FOR DOWN DISCHARGE UNITS

EngA®

ENGINEERED AIR®

REVISIONS:

DATE:	DRWN BY:	CHKD BY:	DRWG NO.:
JAN 02 2014	NSS		06927C–04–1

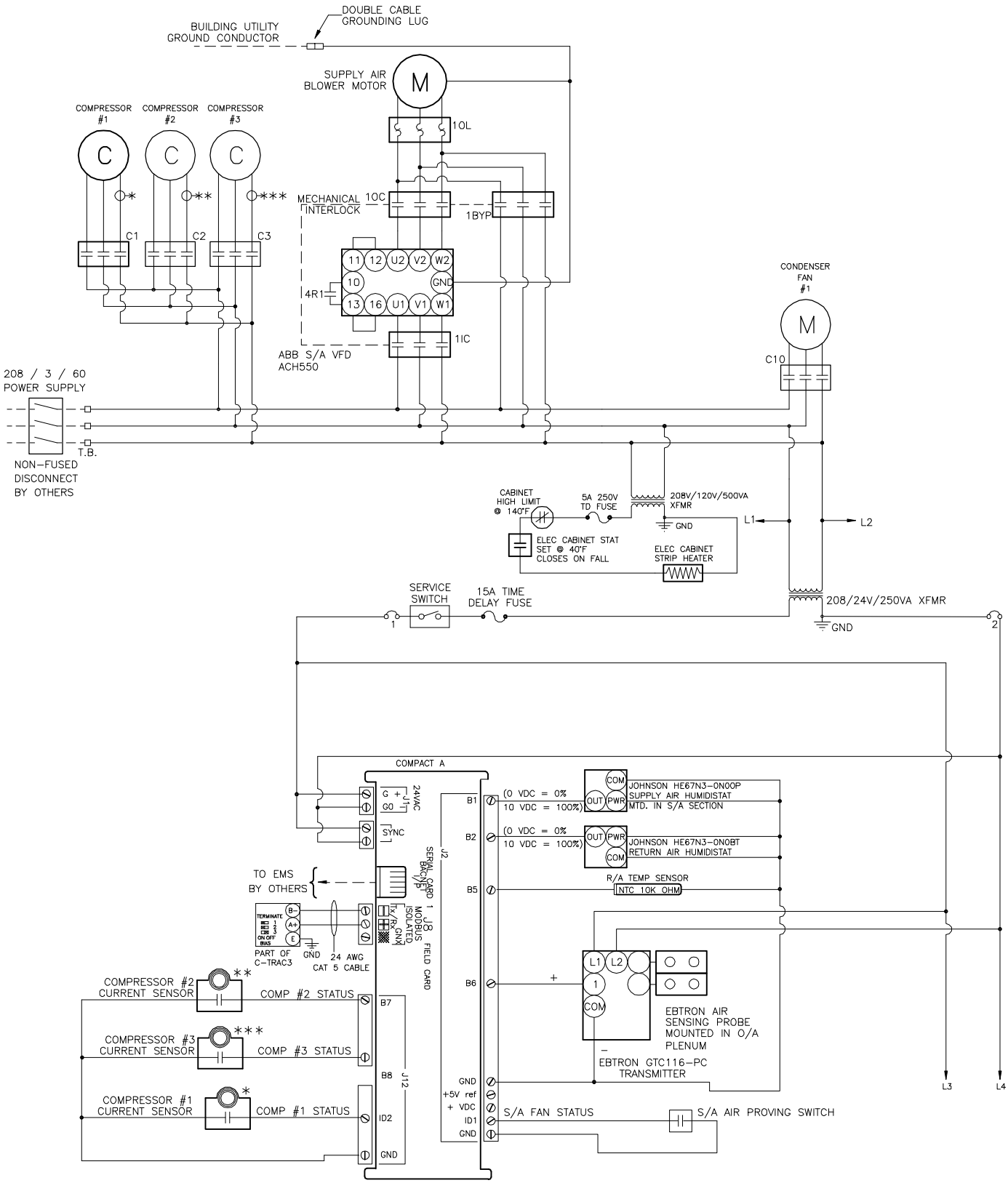

- - - - - - - - - DENOTES FIELD WIRING. REPLACEMENT WIRE MUST BE EQUIVALENT TO ORIGINAL WIRE SUPPLIED.

TAG: RTU-4 *(Indicated as RTU-2 on TCE's Drawings)*

PAGE 1 OF 2

INTERNAL WIRING
FW_DJ SERIES

EngA®

ENGINEERED AIR®

REVISIONS:			
DATE:	DRN.BY:	CHKD.BY:	DRWG.NO.:
JAN 3 2014	NSS		06927E-04-1

DK6927 (RV655) U:\CAD\DRAWINGS\FW_DJ

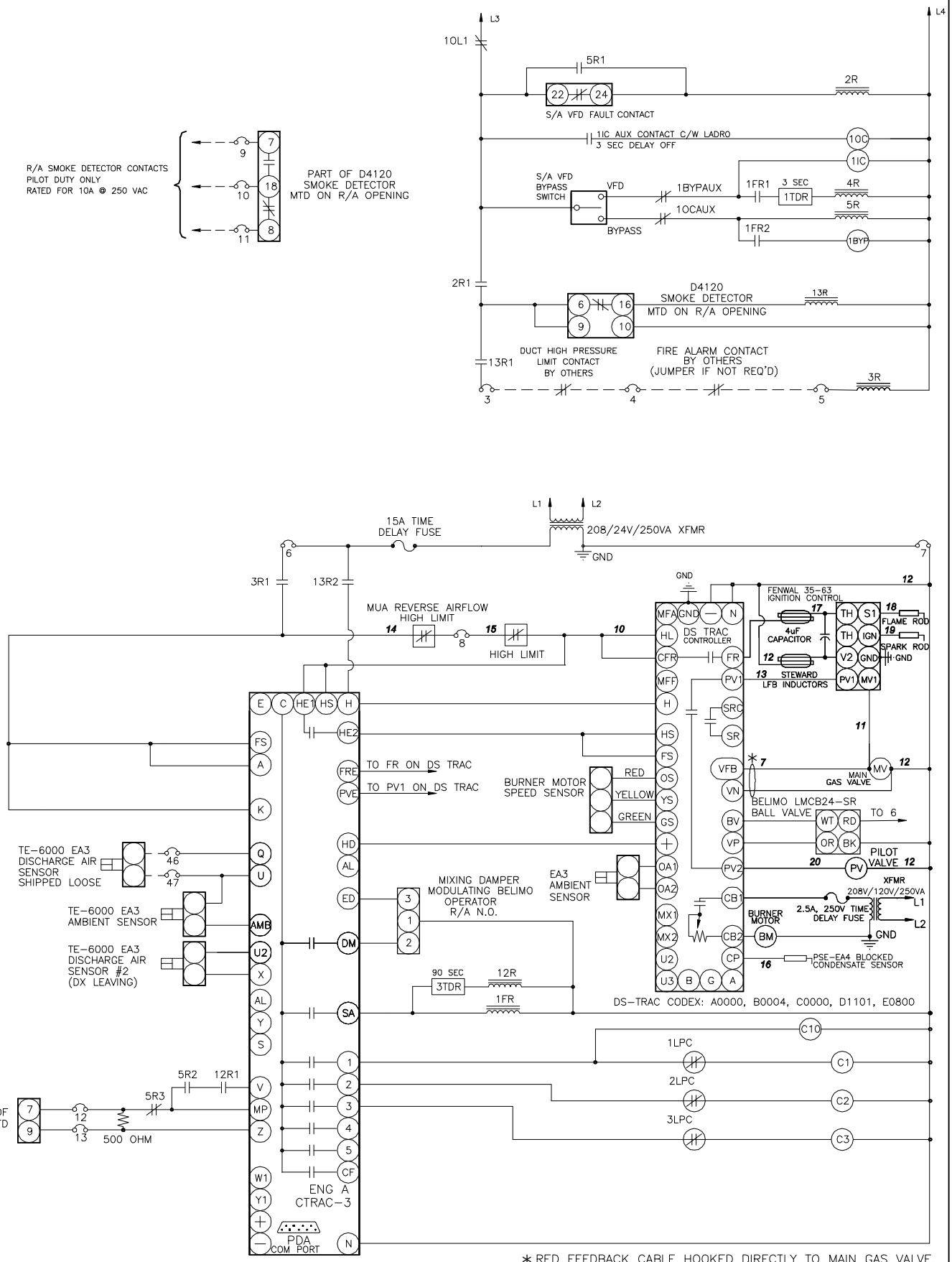

- - - - - - - - - - DENOTES FIELD WIRING. REPLACEMENT WIRE MUST BE EQUIVALENT TO ORIGINAL WIRE SUPPLIED.

TAG: RTU-4 *(Indicated as RTU-2 on TCE's Drawings)*

PROGRAM #31

PAGE 2 OF 2

INTERNAL WIRING
FW_DJ SERIES

EngA®

ENGINEERED AIR®

REVISIONS:			
DATE:	DRN.BY:	CHKD.BY:	DRWG.NO.:
JAN 3 2014	NSS		06927E-04-2

DK6927 (RV655) U:\CAD\DRAWINGS\FW_DJ

EngA ENGINEERED AIR

ELECTRICAL DATA

JOB NAME: GRAFTON BETHEL ES PHASE III] **JOB NO:** DK6927(RV655)

EngA MODEL: FWE63/DJX20/O **QTY:** 1 **TAG:** RTU-4

(Indicated as RTU-2 on TCE's Drawings)

Power Supply	Minimum Circuit Ampacity	Terminal Block to Accept	Maximum Fuse (Dual Element)	Maximum Breaker	Minimum Unfused Conductor
208 / 3 / 60	40.9 AMPS	8 Awg	45 AMPS	45 AMPS	14 Awg

Components	Model	Minimum Conductor Size	Ampacity FLA / LRA
Supply Fan Motor	Super 'E' ODP (1750) 1 1/2 HP	14 Awg	5.1
Burner Motor(Xfmr)	PSC(Use Xfmr) 1/12 HP	14(14) Awg	1.32 @ 120/1/60
Compressors #1 to #3	ZR21K5E-TF5-130	14 Awg	7.7 / 58.0
Condenser Fan Motor	OPAO 0.75 HP	14 Awg	3.3
Main Control Xfmr		14 Awg	1.2
Control Xfmr		14 Awg	1.2
Heater Xfmr		14 Awg	2.4

UNIT CONTROL PANEL(S) SHORT CIRCUIT CURRENT RATING (SCCR)
Short circuit current 5 kA rms symmetrical, 208 V maximum

WIRING DRAWING LEGEND					
AFS	Auto Fan Switch	DM	Damper Motor	LAR	Low Ambient Relay
C	Contactor	FR	Fan Relay	NFD	Non Fused Disconnect
CCH	Compressor Crankcase Heater	GV1	Low Stage Gas Valve	OL	Thermal Overload
CFC	Condenser Fan Control	GV2	High Stage Gas Valve	OP	Oil Failure Switch
CLC	Compressor Loading Control	HR	Heating Relay	PV	Pilot Gas Valve
CPM	Compressor Protection Module	HLPC	High/Low Pressure Control	R	Relay or Contactor
CP	Internal Compressor Protection	HL	High Limit Control	SS	Sail Switch
CR	Cooling Relay	IGN	Ignition Control	TB	Terminal Block
CUC	Cylinder Unloading Control	LAC	Low Ambient Control	TDR	Time Delay Relay
CUS	Cylinder Unloading Solenoid	LPC	Low Pressure Control	TC	Time Clock

UNIT FUNCTION

CTRAC-3 Program #31

EMS HAS FULL CONTROL OF CTRAC-3

Non fused disconnect switch (by others) 'on', service switch 'on', VFD fault contacts 'closed', smoke detector contact (supplied by others, installed by EngA) 'closed', duct high pressure limit (by others) 'closed', fire alarm contacts (by others) 'closed' (jumper if not required). EMS enable unit 'ON' (BV42). Outside and Return air dampers 'open', the blower is enabled and run continuously c/w VFD for air balancing only.

The C-TRAC3 controller, with an adjustable discharge air setpoint from EMS (AV25), will modulate the heating or cooling (and cycle 3 stages of compressors) to maintain the required discharge air temperature from 50°F to 90°F.

EMS cool mode enabled

If there is a call for cooling (BV47), the C-TRAC3 will begin staging on the mechanical cooling. The DX coil leaving temperature control band is from 50°F to 90°F, controlled via EMS cooling setpoint signal (AV25). Mechanical cooling is locked out below 50°F ambient temperature

EMS heat mode enabled

If the C-TRAC3 is in heating mode (BV48) and there is a call for heating, the C-TRAC3 will close the HE contacts and output a

(Continued on second page) **DATE:** 17-JAN-2014 **SUBMITTED BY:** STEVE JONES / NSS

EngA ENGINEERED AIR

ELECTRICAL DATA

JOB NAME: GRAFTON BETHEL ES PHASE III] **JOB NO:** DK6927(RV655)

EngA MODEL: FWE63/DJX20/O **QTY:** 1 **TAG:** RTU-4

(Indicated as RTU-2 on TCE's Drawings)

UNIT FUNCTION CONTINUED

0 - 10 vdc modulating heating signal directly to the DS-TRAC heating controller to operate all aspects of burner operation. The discharge temperature will be controlled via EMS D/A setpoint signal (AV25), and the discharge air temperature control band is from 50°F to 90°F. Gas heating is disabled above 120°F ambient temperature.

EMS Economizer Mode Enabled

In economizer mode (BV45), the C-TRAC3 will modulate the mixing dampers to maintain the required discharge air temperature. The outside air damper minimum position is set at 20% outside air (AV1045) . When economizer is disabled (BV45), -or- above 68°F ambient temperature -or- when in cooling -or- heating mode minimum position at 20% outside air (AV1045).

EMS dehumidification mode enabled

When in dehumidification mode (BV43), the C-TRAC3 will enable the cooling to maintain the desired leaving DX coil temperature set by EMS signal (AV27) to achieve the required room relative humidity. The heating is also enabled for reheat to satisfy the required discharge air temperature (AV25).

EMS enable unit 'OFF' (BV45), C-TRAC3 begins shutdown cycle, dampers close, blowers delay off and shut down. If the fire alarm contacts 'open' -or- smoke detector contact (supplied by others, installed by EngA) 'open' -or- duct high pressure limit contact 'open', equipment operation is disabled immediately. If the discharge air temperature falls below 40°F, the C-TRAC3 will shut down fans, close dampers and indicate alarm.

Refer to the C-TRAC3 face mounted LED's for mode indication and status.

Note 1. Compressor(s) cycle has minimum run time, minimum off time and interstage timing.

Note 2. Refer to manuals shipped with unit for more detailed explanation of maintenance, components and controls.

Note 3. Go to www.engineeredair.com/manuals/manuals.asp for online manual details.

Note 4. VFD is equiped with external bypass and will be sent to 60hz.

BACNET control and status variable points list: (See C-TRAC3 BACnet IO&M for additional points)

DATE: 17-JAN-2014 **SUBMITTED BY:** STEVE JONES / NSS

EngA ENGINEERED AIR

JOB NUMBER: DK6927 (RV655)

TAG: RTU-4

Network Control Variable List - C-TRAC3 BACnet

(Indicated as RTU-2 on TCE's Drawings)

Variable	Description	Note
BV36	Air Flow Problem	R
BV26	Ambient Sensor Alarm	R
AV11	Ambient Temperature	R
BV10	Blower Status	R
BV13	Cooling Lockout - Low Ambient Temperature	R
BV5	Cooling Mode - A	R
AV18	Cooling Modulated Output	R
AV17	Cooling Stages % On	R
BV50	Cooling Status - Mechanical Cooling On/Off	R
AV19	Damper % Open	R
BV16	Damper Contact DM closed	R
AV7	Damper Minimum Position	R
BV11	Damper Override Low Discharge Temperature	R
BV19	Discharge Air Low Limit Lockout	R
BV24	Discharge Air Sensor Alarm	R
AV12	Discharge Air Temperature	R
AV14	Discharge Air Temperature Setpoint	R
BV22	DJ or DG Flame Failure Alarm	R
BV21	DJ or DG Prepurge Alarm	R
BV17	Economizer At Minimum Due to High Ambient	R
BV15	Economizer Mode	R
BV6	Economizer Mode - E	R
BV47	EMS Cooling Enabled	R/W
AV1045	EMS Damper Minimum Position Setpoint	R/W
BV43	EMS Dehumidification Enabled	R/W
AV25	EMS Discharge Air Setpoint	W
AV26	EMS Discharge Air Setpoint	R
BV45	EMS Economizer Enabled	R/W
BV48	EMS Heating Enabled	R/W
AV27	EMS Secondary Discharge Air Setpoint	W
AV28	EMS Secondary Discharge Air Setpoint	R
BV42	EMS Unit Command On/Off	R/W
BV14	External Cooling Lockout - A	R
BV41	Heat Fail Lockout	R
BV20	Heat Failure Lockout	R
BV40	Heating Lockout High Ambient Temperature	R
BV7	Heating Mode - HS	R
AV20	Heating Modulating % Output	R
BV39	Heating Status	R
BV23	LMK or HE Failure Alarm	R
BV4	Occupied Mode - FS	R
BV25	Secondary Discharge Air Sensor Alarm	R
AV13	Secondary Discharge Air Temperature	R
BV35	Sensor Failure Alarm	R

DATE: 1/16/2014

SUBMITTED BY: NSS

EngA® ENGINEERED AIR®

JOB NUMBER: DK6927 (RV655)

TAG: RTU-4

Network Control Variable List - C-TRAC3 BACnet

(Indicated as RTU-2 on TCE's Drawings)

Variable	Description	
AV1044	Unit On/Off Status	R
BV8	Unoccupied Mode - K	R
Bv18	VFD Cooling Lockout - Limit Stages due to Low Air Volume	R
AV10	VFD Speed Feedback	R
BV49	Write to Flash	R/W
ADDITIONAL POINTS	----------	
AV001	Supply Air Humidity	R
AV005	Return Air Temperature	R
AV002	Return Air Humidity	R
AV006	Outside Air CFM	R
BV003	Supply Air Fan Status	R
BV058	Compressor 1 Status	R
BV071	Compressor 2 Status	R
BV072	Compressor 3 Status	R

DATE: 1/16/2014

SUBMITTED BY: NSS

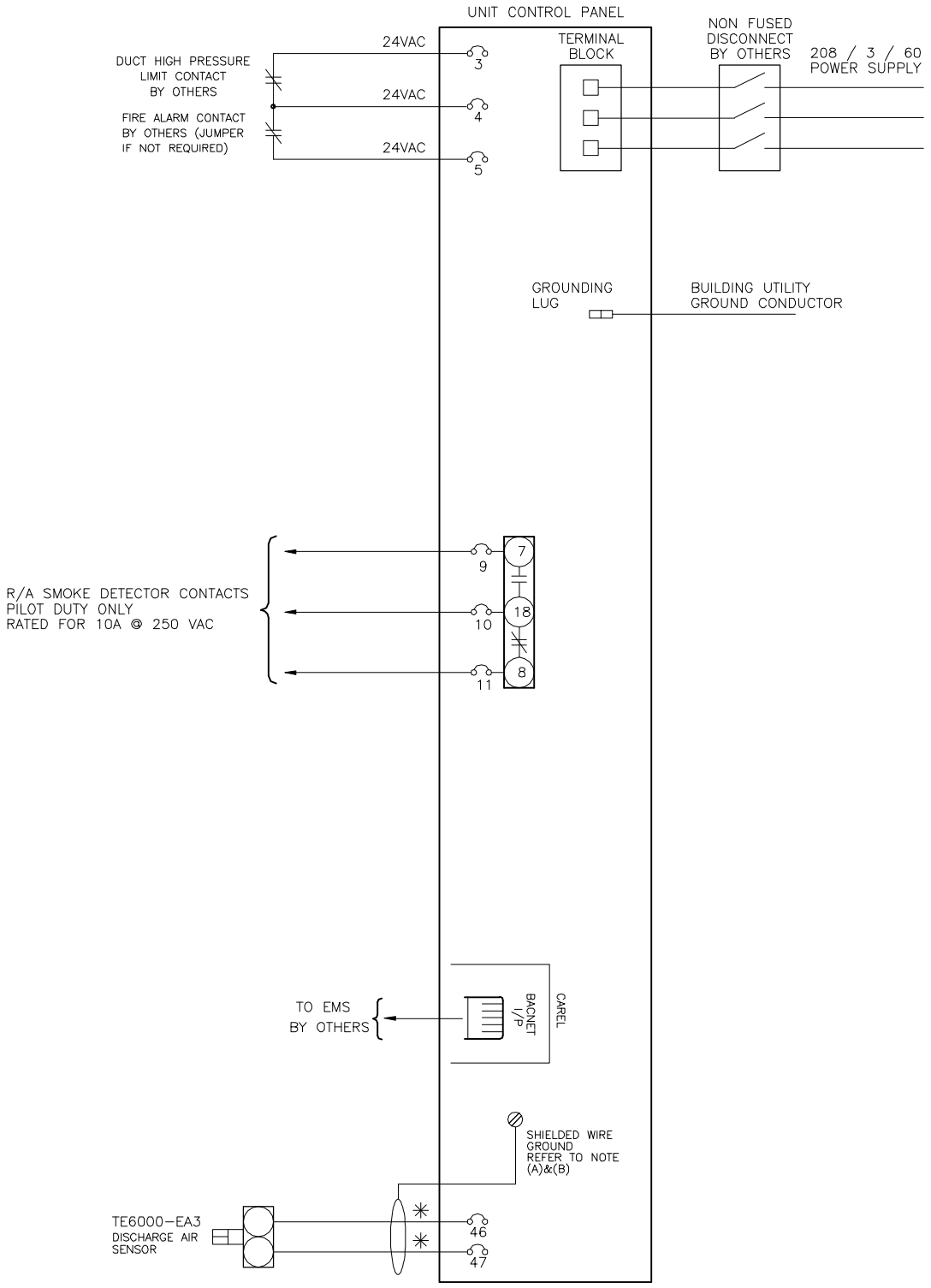

MAXIMUM CONTROL CIRCUIT AMPACITY 14.6 AMPS AT 24 VAC

✳ SHIELDED WIRE IS REQUIRED WITH ELECTRONIC COMPONENTS.

(A) SHIELDED WIRE TO BE GROUNDED AT MAIN ENG A CONTROL CABINET END ONLY. TAPE OTHER END OF GROUND WIRE & SHIELD ENDS OF ANY UNUSED WIRES.

(B) ENGINEERED AIR STRONGLY RECOMMENDS THAT THE SHIPPED LOOSE DISCHARGE AIR SENSOR BE MOUNTED 5–10 FT. DOWN STREAM OF HEAT EXCHANGER DISCHARGE OPENING TO AVOID TEMPERATURE SWING CAUSED BY RADIANT HEAT.

1. FIELD WIRING VOLTAGE DROP NOT TO EXCEED 10%.
2. ALL WIRING SHOWN SHALL BE COMPLETED BY INSTALLER.
3. ALL WIRING TO COMPLY WITH THE NATIONAL ELECTRICAL CODE.

TAG: RTU–4 *(Indicated as RTU-2 on TCE's Drawings)*

FIELD WIRING DIAGRAM
FW_DJSERIES

EngA®

ENGINEERED AIR®

REVISIONS:			
DATE:	DRN.BY:	CHKD.BY:	DRWG.NO.:
JAN 8 2014	NSS		06927F–04–1

DK6927 (RV655) U:CAD\DRAWINGS\FW_DJ

EngA ENGINEERED AIR

SUBMITTAL RECORD

JOB NAME: GRAFTON BETHEL ES PHASE III] **JOB NO:** DK6927(RV655)

CUSTOMER: YORK COUNTY SCHOOLS **ENGINEER:** THOMPSON CONSULTING ENGINEERS

EngA MODEL: FWE224/DJX40/O **QTY:** 1 **TAG:** RTU-7

(Indicated as RTU-3 on TCE's Drawings)

SHIPPING AND APPROVAL INFORMATION

MOUNTING Outdoor Base Mounted c/w Prefab Roof Curb **ACCESS** As Per Drawing

UNIT MINIMUM AMBIENT -20°F **SHIPPING WEIGHT** 6800 lb **OPERATING WEIGHT** 7000 lb

NO. OF PIECES 2 (Unit + Curb)

- ETL approval.
- Operating weight includes curb.

SUPPLY AIR DATA

AIR FLOW 5,300 CFM **FAN SIZE** (1) 16 VBC CL K **TSP** 3.8 in w.c. **RPM** 2019

MOTOR SIZE 5 HP **TYPE (RPM)** Super 'E' ODP (1750) **ESP** 0.75 in w.c. **BHP** 4.49 BHP

- Supply air fan/motor c/w spring vibration isolation and pillow block bearings.
- Unit mounted ABB adjustable speed drive (air balancing only) c/w integral line reactors, load reactors, vented control cabinet, control cabinet heater and manual bypass.

AIR OPENING DATA

AIR OPENING	LOCATION	DAMPER TYPE	OPERATION
SUPPLY AIR	See Below [1]		
RETURN AIR	See Below [1]	RUSKIN CD-50 Low Leakage Aluminum Air-foil Parallel Blade	Modulating
OUTSIDE AIR	See Below [1]	RUSKIN CD-50 Low Leakage Aluminum Air-foil Parallel Blade	Modulating

- [1] - See Mechanical Drawing
- Ebtron Gold Outside Airflow Monitoring Station.

CONSTRUCTION DATA

UNIT CABINET 18 gauge satin coat galvanized sheet metal c/w 2" 3 lb/ft³ insulation on entire unit casing.

UNIT LINER 22 gauge solid liner throughout but not including unit underside.

UNIT FLOOR 18 gauge satin coat galvanized sheet metal on entire unit floor.
Floor c/w floor drain connection through base frame (see mechanical drawing for locations)

EXTERIOR PAINT DTM Polyurethane paint finish (color to be advised) on all exterior surface but not including unit underside.

AIRSIDE DOOR All access - deluxe welded steel framed hinged c/w lever type door handles , stainless steel piano hinges, handles interlocked, and bulb seal gasket.

SERVICE DOOR Electrical, burner and compressor access - hinged c/w lever type door handle

DRAIN PAN 18 gauge 304L stainless steel drain pan c/w floor drain connection through casing on DX coil section and DX coil header section.

- EngA drainable weather louvre(s) c/w 1" bird screen.
- 6" x 6" electrical chase.
- Humid Climate Construction c/w slope roof.

ELECTRICAL DATA

POWER SUPPLY	MINIMUM CIRCUIT AMPACITY	MAXIMUM FUSE(D.E.)	MAXIMUM BREAKER
208 / 3 / 60	113.9 AMPS	125 AMPS	125 AMPS

- See Electrical Data Sheet for details.
- Smoke detecter provided by others. Installed by EngA mounted in return air opening.
- MCA based on ABB VFD amps for supply motor.

DATE 17-Jan-2014

Continued on page 2

EngA ENGINEERED AIR

SUBMITTAL RECORD

JOB NAME: GRAFTON BETHEL ES PHASE III] **JOB NO:** DK6927(RV655)

EngA MODEL: FWE224/DJX40/O **QTY:** 1 **TAG:** RTU-7

SUPPLY FILTER SECTION DATA - Side Loaded

(Indicated as RTU-3 on TCE's Drawings)

FILTER TYPE Pleated Filter with MERV 8 rating c/w Metal Frame

QTY/SIZE 4 - 20 x 20 x 2" **QTY/SIZE**

TOTAL GROSS AREA 11.11 SQ.FT. **FACE VELOCITY** 477 FPM

- Filters may be shipped loose or mounted in the tracks.
- 1 spare set of filters - shipped loose

BURNER HEATING DATA - INDIRECT FIRED (DJX-40)

POWER BURNER EngA 'HT' Series **HEAT EXCH. MATERIAL** Stainless Steel

FUEL Natural Gas **INLET PRESSURE** 7 in wc. **GAS FIELD CONN.** 0.75"

HEAT INPUT 300,000 Btuh **HEAT OUTPUT** 270,000 Btuh **TEMP. RISE** 42.0 °F

- EngA (15 : 1) high turndown burner
- Three pass heat exchanger c/w condensate drain connection. Condensate drain piping must be fully piped to a suitable drain before starting unit.
- Heat exchanger section has 1" 1.5 lb/ft³ insulation with 22 gauge solid liner
- Modulating combustion air and gas control.
- Heating is controlled by CTRAC controller.
- Condensate drain connection through curb. See roof curb drawing for details..

AIR COOLED DX SYSTEM DATA

COIL SIZE 37.5 x 45 x 8R x 10 FPI **VELOCITY** 452 FPM

CAPACITY 263,200 Btuh **AIR P.D.** 0.99 in.wc.

ENTERING AIR DB / WB 82.4°F / 68.5°F **LEAVING AIR DB / WB** 52.5°F / 52.4°F

DESIGN AMBIENT TEMP 95°F **SST/SCT** 47.4°F / 123.8°F **REFRIGERANT TYPE** R-407C

COMPRESSOR TYPE Hermetic Scroll **MODEL** ZR61KCE-TF5-250 **QUANTITY** 4

- DX cooling coil c/w alternate tube circuiting, hot gas bypass on lead compressor circuit and stainless steel drain pan.
- CTRAC discharge air control c/w EMS reset - provides 4 stages of mechanical cooling modulates economizer for free cooling and interfaces with heating control.
- CTRAC Integral low limit auto bypass; set @ 40°F.
- Mechanical cooling operates down to 50°F ambient temperature.
- DX coil compressor circuit #1 and #2 c/w insulated suction line, TX valve, service valves, sight glass, liquid line filter/drier, reclaim valve, liquid line solenoid, suction accumlator, head pressure control, EngA intercooler, low pressure control, high pressure control and liquid receiver.
- DX coil compressor circuit #3 and #4, c/w insulated suction line, TX valve, sight glass, low pressure control and liquid line filter/drier.
- Condenser coil c/w hail gaurd.

CONDENSER REHEAT COIL DATA

COIL SIZE 34 x 40 x 4R x 8 FPI **VELOCITY** 561 FPM

CAPACITY 171,600 Btuh **AIR P.D.** 0.26 in.wc.

ENTERING AIR DB 52.5°F **LEAVING AIR DB** 82.5°F

- Modulating condenser reheat part of circuit #1 and #2, provides 30°F of total reheat.
- Leaving discharge temperature of unit will be estimated at 84.5°F, including 2.0°F of motor heat.

SHIPPED LOOSE ITEMS (See filter section for filters and spare filters)

1 - Pre fabricated roof curb (See drawing for details).

Continued on page 3

EngA ENGINEERED AIR

SUBMITTAL RECORD

JOB NAME: GRAFTON BETHEL ES PHASE III] **JOB NO:** DK6927(RV655)

EngA MODEL: FWE224/DJX40/O **QTY:** 1 **TAG:** RTU-7

SHIPPED LOOSE ITEM (CONTINUED) *(Indicated as RTU-3 on TCE's Drawings)*

1	-	Flue Diverter
1	-	DJX condensate drain pipe - 42"
1	-	Axiom NT25 Tank Condensate Neutralization
1	-	Discharge Air Temperature Sensor

EngA ENGINEERED AIR

PACKAGED AIR COOLED SYSTEM PERFORMANCE DATA - EEV UNIT

Version 3.4.3E

Job Name: _____ **Job No.:** 6927 (RV655)

Customer: _____ **Tag No.:** _____

Location: Richmond, VA **Altitude:** 0 feet

(Indicated as RTU-3 on TCE's Drawings)

Coil Tag	RTU-7 FIN 12 PASS
Unit Model	FWE224.46
Compressor Qty & Model(s) [Refrigerant]	(4) ZR61KCE/ 208-460V [R-407C]
Summer Ambient / Roof Effect, °F	92.0 / 15.0
Cond. Coil Size, in (H x L x R x FPI)	(1 @ 48) x 97 x 3R 14 (3/8" c/w 1" space)
Cond. Header Qty. & Size, in	(4) 7/8
Cond. Coil Circuiting / Ton/Circ (Ton)	12P - 12C - 0(subC + B) / 1.83
Cond. Fan Qty & Type or BHP, Eff.	(3) 26E c/w 1.0 HP
Cond. Tube PD, PSI / Comp HOC	12.0 / 1.28
Cond. Fx / Airflow, CFM, PD, in.wc.	0.6 / 19695, 0.30
DX Coil Size, in (H x L x R x FPI)	37.5 x 45 x 8R 10 (Alternate)
DX Coil Size, mm (H x L x R x FPI)	-
DX Coil Circuiting	12P - 20C - 0B
Header Qty. & Size, in	(4) 1 1/8
DX Tube PD, PSI / Velocity, FPM	2.2 / 1502.4
Distributors Qty. & Size	(4) 4-4-5
Distributors Pressure Drop, PSI	28.6
Distributors Nominal Load (%)	71
# of HGBP / Ton/Circ (Ton)	1 / 1.10
Design Ambient, °F DB	95.0
Net Capacity, MBH	263.2
Total / Sensible Capacity, MBH	263.2 / 171.1
Air Flow Conditions	Standard CFM
Total / DX Air Flow, CFM	5300 / 5300
Air EDBT, °F / EWBT, °F	82.4 / 68.5
DX LDBT / LWBT, °F	52.5 / 52.4
D/A LDBT / LWBT, °F	52.5 / 52.4
Water Removal, lb/h	81.4
Drain Pan, in / No. of Mid. Pan	6 / 0
Leaving Coil Velocity, AFPM	440
Coil Pressure Drop, in.wc.	0.99
SST / SCT, °F	47.4 / 123.8
S/A Motor Information	
R/A Motor Information	
EER/ IEER Under design condition	-
CSA C746-06 EER	10.00
AHRI 340/360-2007 EER / IEER	10.0 / 10.1
Notes	2,6

Notes:
[2] The coil performance data is based on R-407C refrigerant.
[6] Mixed air application.

Submitted By: NSS Date: 1/15/2014

Customer: GRAFTON BETHEL ES PHASE III	Fan Tag: RTU-7
Job ID: DK6927	Model: 16 VBC
CL K	*(Indicated as RTU-3 on TCE's Drawings)*

92

TWIN CITY FAN AND BLOWER PERFORMANCE CURVE

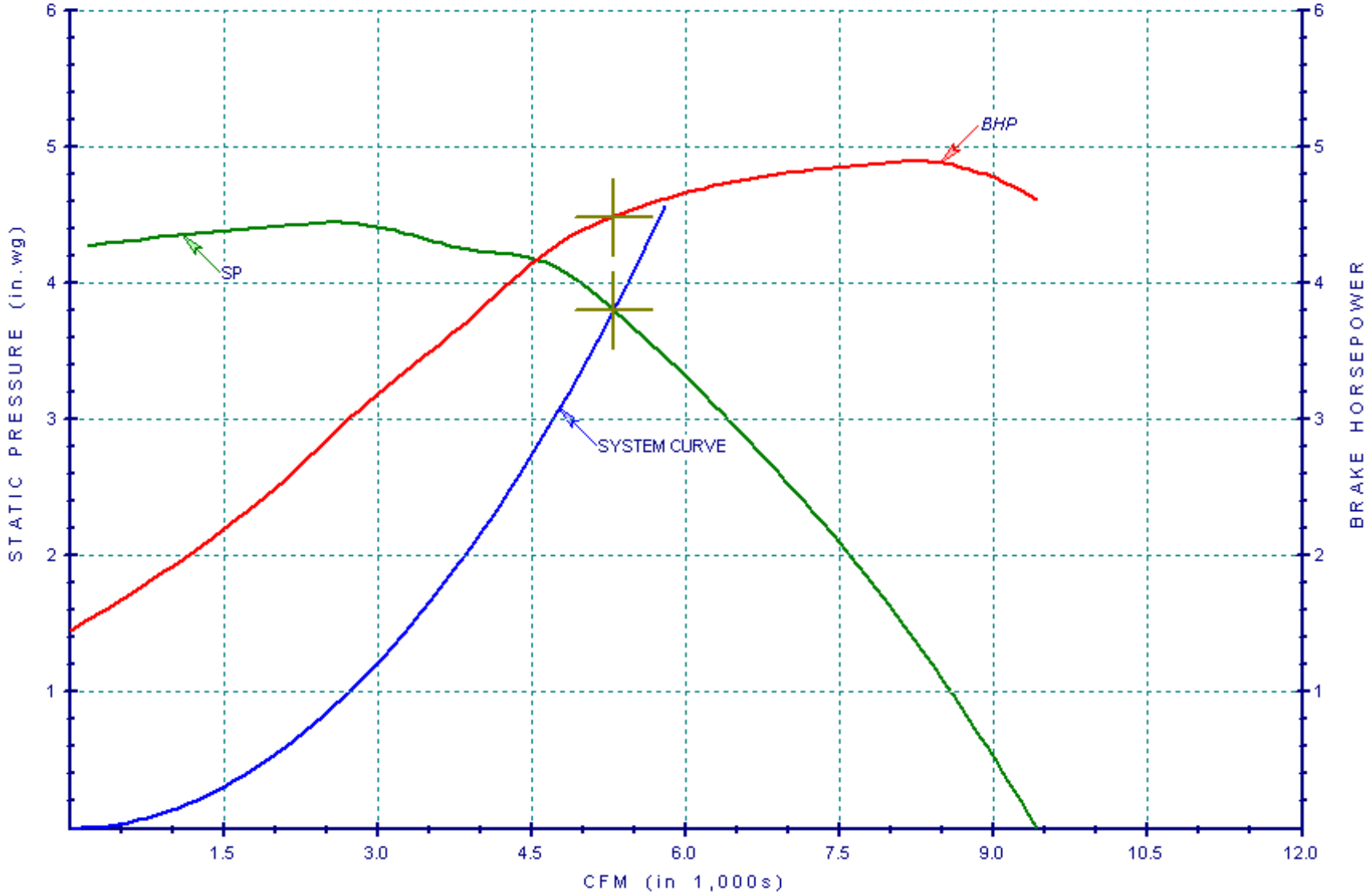

CFM:	5,300
SP:	3.8 in.wg
RPM:	2019
BHP:	4.49
Outlet Velocity:	1,915
Density:	0.075

Inlet Sound Power

Octave	Level
1	85
2	83
3	87
4	93
5	85
6	82
7	77
8	71

in db re 10^{-12} watts

1/2/2014

(Indicated as RTU-3 on TCE's Drawings)

U:CAD\DRAWINGS\FW_DJ

ProUnit

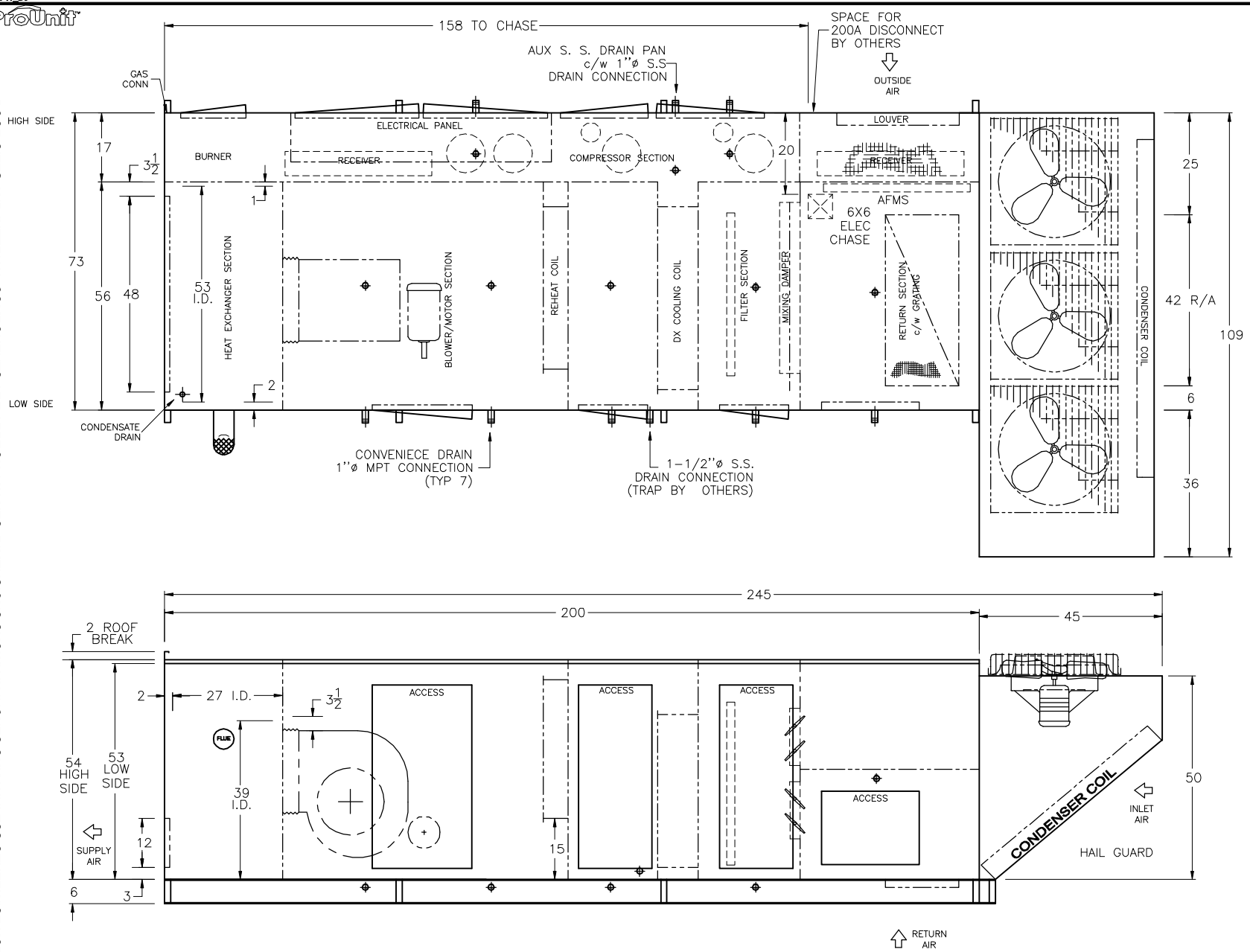

DOOR SIZES AND INTERNAL COMPONENTS ARE APPROX. VALUES. DIMENSIONS SHOWN IN INCHES ONLY UNLESS OTHERWISE NOTED.

DK6927 (RV655)
TAG: RTU-7

FWE224/DJX40/O/MV
HEAT/COOL UNIT

ENGA ENGINEERED AIR

REVISIONS:	DATE:	DRWN BY:	CHKD BY:	DRWG NO.:
	DEC 18 2013	NSS		06927M-07-1

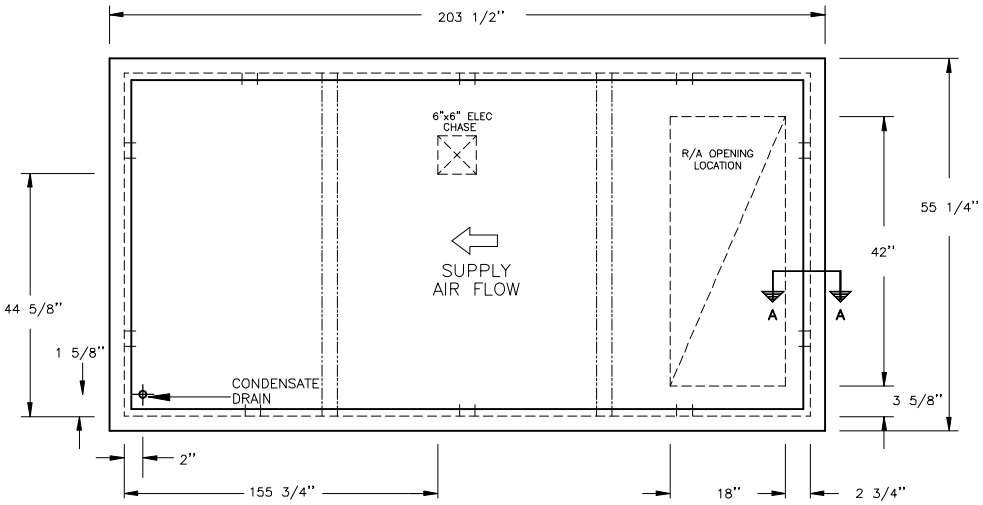

PLAN VIEW

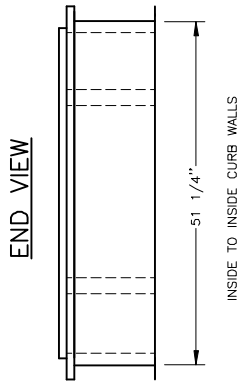

END VIEW

ELEVATION

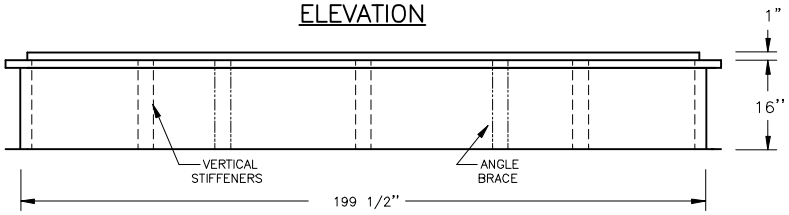

INSIDE TO INSIDE CURB WALLS

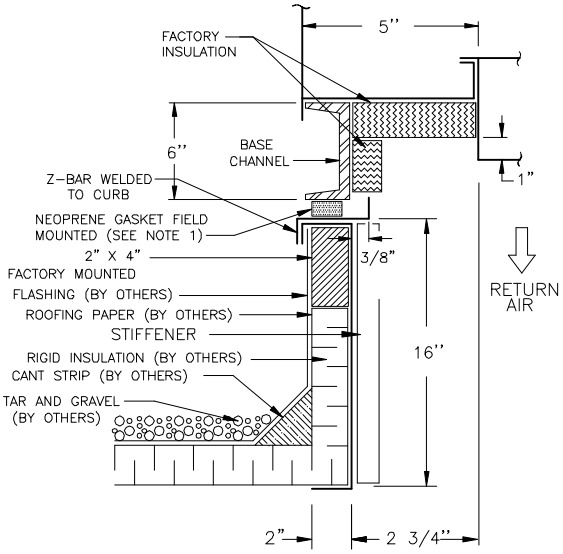

SECTION A–A

NOTES:

1. 3/8" X 3/4" NEOPRENE GASKET FOR 2" TO 4" CHANNELS, OR 3/8" X 1–1/2" NEOPRENE GASKET FOR CHANNELS 6" AND OVER.
2. CURB MAY BE BROKEN DOWN FOR SHIPPING. IN THESE CASES, FIELD ASSEMBLY WILL BE REQUIRED BY INSTALLING CONTRACTOR.
3. CONTINUOUS BASE SUPPORT TO CURB PANELS, INCLUDING THE CENTER SUPPORT PANEL IF SUPPLIED, IS REQUIRED BY OTHERS.
4. DIMENSIONS GIVEN IN INCHES ONLY

AutoCurb™ Phase II version 2.2.10

U:\CAD\DRAWINGS\FW_DJ

JOB# DK6927 DRAWING NOT TO SCALE FWE224/DJX40/O/MV

TAG: RTU–7 (Indicated as RTU-3 on TCE's Drawings) 16" HIGH CURB FOR HORIZONTAL DISCHARGE UNITS

EngA® ENGINEERED AIR®

REVISIONS:			
DATE:	DRWN BY:	CHKD BY:	DRWG NO.:
JAN 02 2014	NSS		06927C–07–1

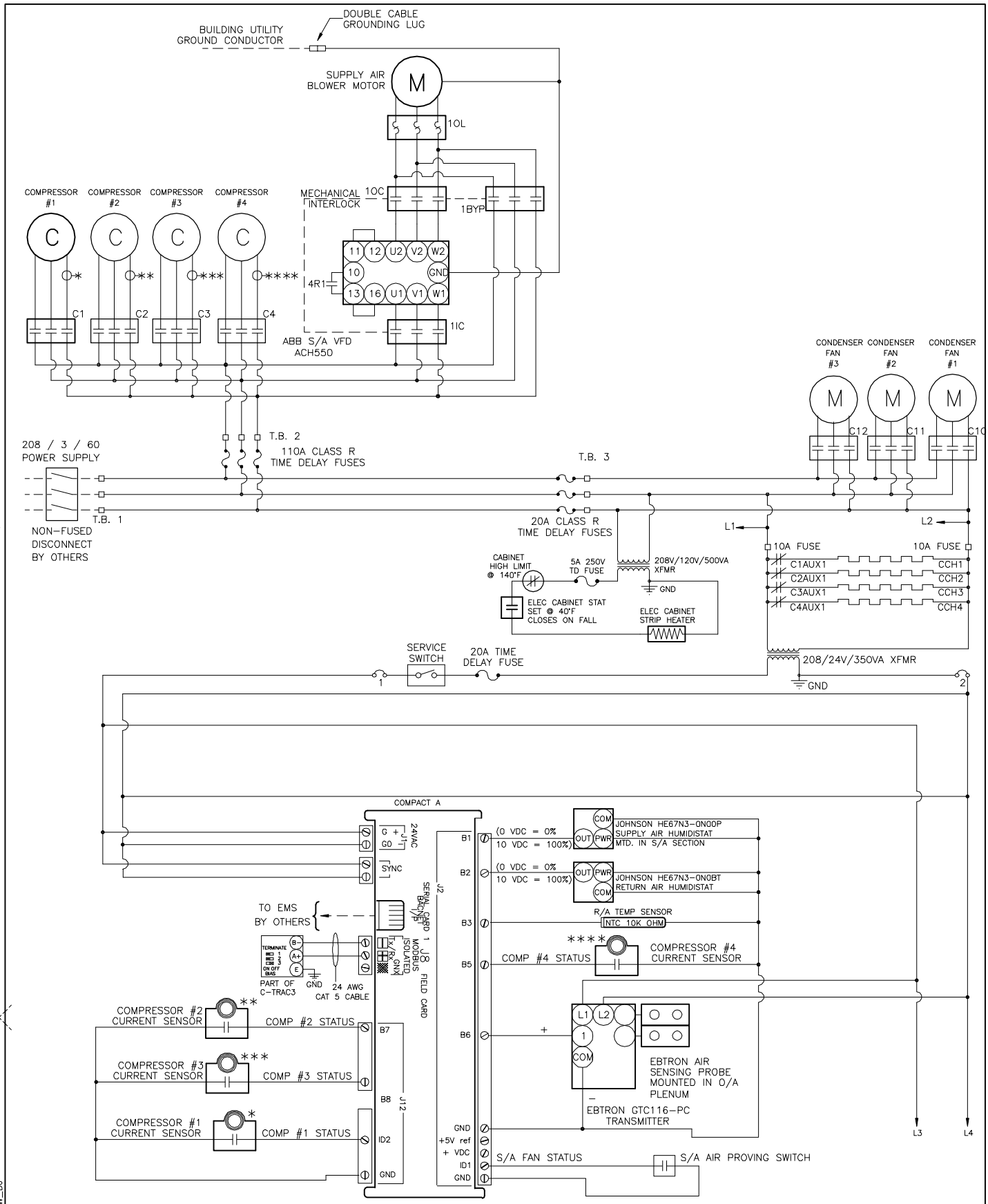

- - - - - - - - - - DENOTES FIELD WIRING. REPLACEMENT WIRE MUST BE EQUIVALENT TO ORIGINAL WIRE SUPPLIED.

TAG: RTU-7 *(Indicated as RTU-3 on TCE's Drawings)*

PAGE 1 OF 2

INTERNAL WIRING
FW_DJ SERIES

EngA®

ENGINEERED AIR®

REVISIONS:			
DATE:	DRN.BY:	CHKD.BY:	DRWG.NO.:
JAN 3 2014	NSS		06927E-07-1

DK6927 (RV655) U:\CAD\DRAWINGS\FW_DJ

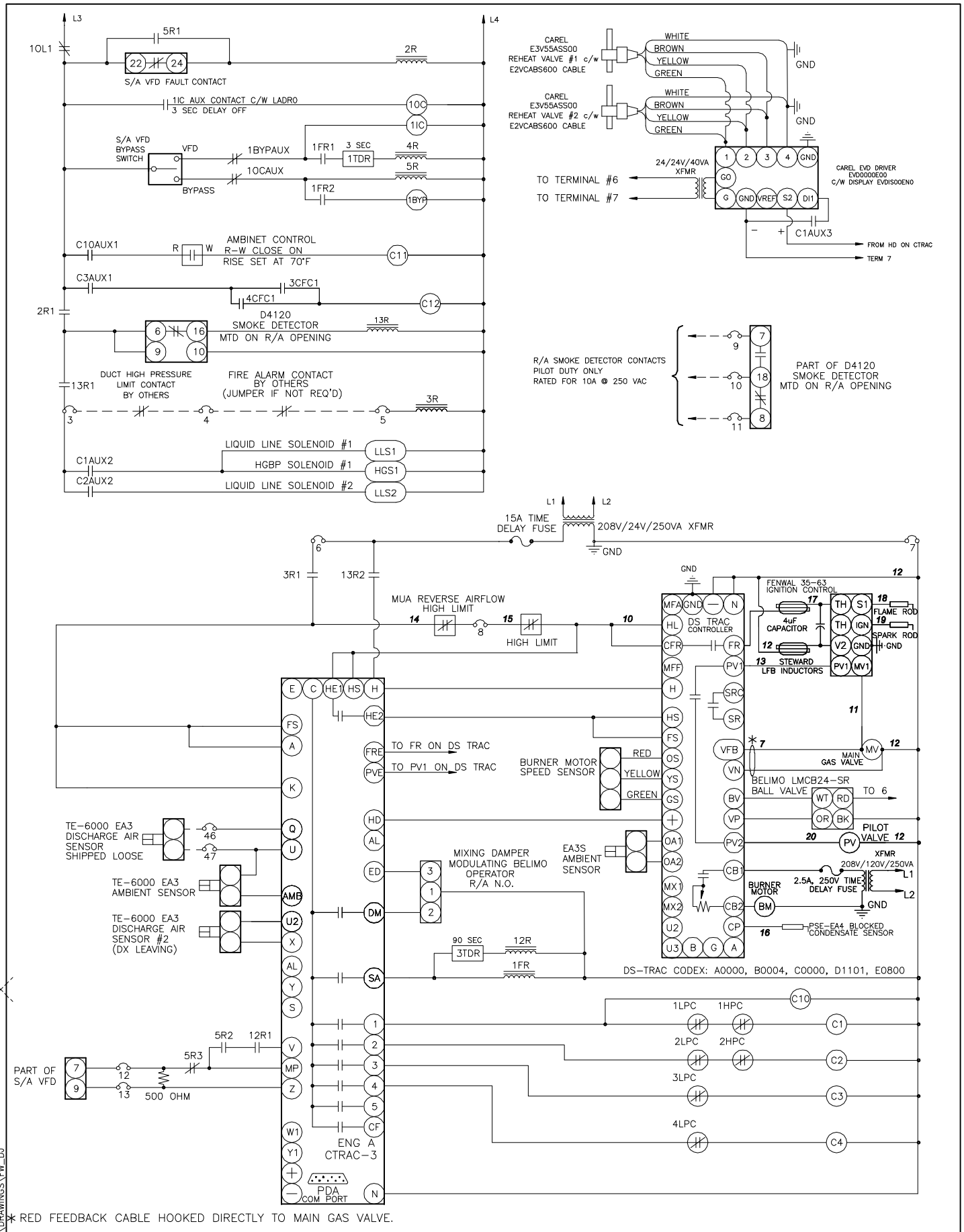

- - - - - - - - - DENOTES FIELD WIRING. REPLACEMENT WIRE MUST BE EQUIVALENT TO ORIGINAL WIRE SUPPLIED.

DK6927 (RV655) U:\CAD\DRAWINGS\FW_DJ

TAG: RTU-7 (Indicated as RTU-3 on TCE's Drawings)

PROGRAM #31

PAGE 2 OF 2

INTERNAL WIRING
FW_DJ SERIES

EngA®

ENGINEERED AIR®

REVISIONS:			
DATE:	DRN.BY:	CHKD.BY:	DRWG.NO.:
JAN 3 2014	NSS		06927E-07-2

EngA ENGINEERED AIR

ELECTRICAL DATA

JOB NAME: GRAFTON BETHEL ES PHASE III] **JOB NO:** DK6927(RV655)

EngA MODEL: FWE224/DJX40/O **QTY:** 1 **TAG:** RTU-7

(Indicated as RTU-3 on TCE's Drawings)

Power Supply	Minimum Circuit Ampacity	Terminal Block to Accept	Maximum Fuse (Dual Element)	Maximum Breaker	Minimum Unfused Conductor
208 / 3 / 60	113.9 AMPS	2 Awg	125 AMPS	125 AMPS	8 Awg

Components	Circuit No	Model	Minimum Conductor Size	Ampacity FLA / LRA	SubFuse Group	Subfuse Group Fuse Size	Terminal Block to Subfuse
Supply Fan Motor	1	Super 'E' ODP (1750) 5 HP	8 Awg	15.3	1	110	2 Awg
Compressors #1 to #4	1	ZR61KCE-TF5-250	8 Awg	18.6 / 128.0			
Burner Motor(Xfmr)	1	PSC(Use Xfmr) 1/12 HP	14(14) Awg	1.32 @ 120/1/60	2	20	14 Awg
Condenser Fan Motors #1 to #3	1	OPAO 1 HP	14 Awg	3.9			
Crankcase Heaters (4 total)	1		14 Awg	.3			
Main Control Xfmr	1		14 Awg	1.7			
Control Xfmr	1		14 Awg	1.2			
Heater Xfmr	1		14 Awg	2.4			

UNIT CONTROL PANEL(S) SHORT CIRCUIT CURRENT RATING (SCCR)
Short circuit current 5 kA rms symmetrical, 208 V maximum

WIRING DRAWING LEGEND					
AFS	Auto Fan Switch	DM	Damper Motor	LAR	Low Ambient Relay
C	Contactor	FR	Fan Relay	NFD	Non Fused Disconnect
CCH	Compressor Crankcase Heater	GV1	Low Stage Gas Valve	OL	Thermal Overload
CFC	Condenser Fan Control	GV2	High Stage Gas Valve	OP	Oil Failure Switch
CLC	Compressor Loading Control	HR	Heating Relay	PV	Pilot Gas Valve
CPM	Compressor Protection Module	HLPC	High/Low Pressure Control	R	Relay or Contactor
CP	Internal Compressor Protection	HL	High Limit Control	SS	Sail Switch
CR	Cooling Relay	IGN	Ignition Control	TB	Terminal Block
CUC	Cylinder Unloading Control	LAC	Low Ambient Control	TDR	Time Delay Relay
CUS	Cylinder Unloading Solenoid	LPC	Low Pressure Control	TC	Time Clock

UNIT FUNCTION

CTRAC-3 Program #31

EMS HAS FULL CONTROL OF CTRAC-3

Non fused disconnect switch (by others) 'on', service switch 'on', VFD fault contacts 'closed', smoke detector contact (supplied by others, installed by EngA) 'closed', duct high pressure limit (by others) 'closed', fire alarm contacts (by others) 'closed' (jumper if not required). EMS enable unit 'ON' (BV42). Outside and Return air dampers 'open'. The blower is enabled and run continuously c/w VFD for air balancing only.

The C-TRAC3 controller, with an adjustable discharge air setpoint from EMS (AV25), will modulate the heating or cooling (and cycle 4 stages of compressors) to maintain the required discharge air temperature from 50°F to 90°F.

EMS will adjust minimum position of dampers (AV1045) to 100% return air for a morning warm-up cycle. Once return air temperature (AV003) above 70°F, EMS will adjust minimum position of dampers to 25% outside air (AV1045) and will be normal operation.

(Continued on second page) **DATE:** 17-JAN-2014 **SUBMITTED BY:** STEVE JONES / NSS

EngA ENGINEERED AIR

ELECTRICAL DATA

JOB NAME: GRAFTON BETHEL ES PHASE III] **JOB NO:** DK6927(RV655)

EngA MODEL: FWE224/DJX40/O **QTY:** 1 **TAG:** RTU-7

(Indicated as RTU-3 on TCE's Drawings)

UNIT FUNCTION CONTINUED

EMS cool mode enabled

If there is a call for cooling (BV47), the C-TRAC3 will begin staging on the mechanical cooling. The DX coil leaving temperature control band is from 50°F to 90°F, controlled via EMS cooling setpoint signal (AV25). Mechanical cooling is locked out below 50°F ambient temperature

EMS heat mode enabled

If the C-TRAC3 is in heating mode (BV48) and there is a call for heating, the C-TRAC3 will close the HE contacts and output a 0 - 10 vdc modulating heating signal directly to the DS-TRAC heating controller to operate all aspects of burner operation. The discharge temperature will be controlled via EMS D/A setpoint signal (AV25), and the discharge air temperature control band is from 50°F to 90°F. Gas heating is disabled above 120°F ambient temperature.

EMS Economizer Mode Enabled

In economizer mode (BV45), the C-TRAC3 will modulate the mixing dampers to maintain the required discharge air temperature. The outside air damper minimum position is set at 25% outside air (AV1045) . Economizer is disabled (BV45) -or- above 68°F ambient temperature -or- when in cooling or heating mode, to minimum position of 25% outside air (AV1045).

EMS dehumidification mode enabled

When in dehumidification mode (BV43), the C-TRAC3 will enable the cooling to maintain the desired leaving DX coil temperature set by EMS signal (AV27) to achieve the required room relative humidity. The heating is also enabled for reheat to satisfy the required discharge air temperature (AV25).

EMS enable unit 'OFF' (BV45), C-TRAC3 begins shutdown cycle, dampers close, blowers delay off and shut down. If the fire alarm contacts 'open' -or- smoke detector contact (supplied by others, installed by EngA) 'open' -or- duct high pressure limit contact 'open', equipment operation is disabled immediately. If the discharge air temperature falls below 40°F, the C-TRAC3 will shut down fans, close dampers and indicate alarm.

Refer to the C-TRAC3 face mounted LED's for mode indication and status.

Note 1. Compressor(s) cycle has minimum run time, minimum off time and interstage timing.

Note 2. Refer to manuals shipped with unit for more detailed explanation of maintenance, components and controls.

Note 3. Go to www.engineeredair.com/manuals/manuals.asp for online manual details.

Note 4. VFD is equipped with external bypass and will be sent to 60hz.

BACNET control and status variable points list: (See C-TRAC3 BACnet IO&M for additional points)

DATE: 17-JAN-2014 **SUBMITTED BY:** STEVE JONES / NSS

EngA® ENGINEERED AIR®

JOB NUMBER: DK6927 (RV655)

TAG: RTU-7

Network Control Variable List - C-TRAC3 BACnet

(Indicated as RTU-3 on TCE's Drawings)

Variable	Description	Note
BV36	Air Flow Problem	R
BV26	Ambient Sensor Alarm	R
AV11	Ambient Temperature	R
BV10	Blower Status	R
BV13	Cooling Lockout - Low Ambient Temperature	R
BV5	Cooling Mode - A	R
AV18	Cooling Modulated Output	R
AV17	Cooling Stages % On	R
BV50	Cooling Status - Mechanical Cooling On/Off	R
AV19	Damper % Open	R
BV16	Damper Contact DM closed	R
AV7	Damper Minimum Position	R
BV11	Damper Override Low Discharge Temperature	R
BV19	Discharge Air Low Limit Lockout	R
BV24	Discharge Air Sensor Alarm	R
AV12	Discharge Air Temperature	R
AV14	Discharge Air Temperature Setpoint	R
BV22	DJ or DG Flame Failure Alarm	R
BV21	DJ or DG Prepurge Alarm	R
BV17	Economizer At Minimum Due to High Ambient	R
BV15	Economizer Mode	R
BV6	Economizer Mode - E	R
BV47	EMS Cooling Enabled	R/W
AV1045	EMS Damper Minimum Position Setpoint	R/W
BV43	EMS Dehumidification Enabled	R/W
AV25	EMS Discharge Air Setpoint	W
AV26	EMS Discharge Air Setpoint	R
BV45	EMS Economizer Enabled	R/W
BV48	EMS Heating Enabled	R/W
AV27	EMS Secondary Discharge Air Setpoint	W
AV28	EMS Secondary Discharge Air Setpoint	R
BV42	EMS Unit Command On/Off	R/W
BV14	External Cooling Lockout - A	R
BV41	Heat Fail Lockout	R
BV20	Heat Failure Lockout	R
BV40	Heating Lockout High Ambient Temperature	R
BV7	Heating Mode - HS	R
AV20	Heating Modulating % Output	R
BV39	Heating Status	R
BV23	LMK or HE Failure Alarm	R
BV4	Occupied Mode - FS	R
BV25	Secondary Discharge Air Sensor Alarm	R
AV13	Secondary Discharge Air Temperature	R
BV35	Sensor Failure Alarm	R

DATE: 1/16/2014

SUBMITTED BY: NSS

EngA® ENGINEERED AIR®

JOB NUMBER: DK6927 (RV655)

TAG: RTU-7

Network Control Variable List - C-TRAC3 BACnet

(Indicated as RTU-3 on TCE's Drawings)

Variable	Description	
AV1044	Unit On/Off Status	R
BV8	Unoccupied Mode - K	R
Bv18	VFD Cooling Lockout - Limit Stages due to Low Air Volume	R
AV10	VFD Speed Feedback	R
BV49	Write to Flash	R/W
ADDITIONAL POINTS	----------	
AV001	Supply Air Humidity	R
AV003	Return Air Temperature	R
AV002	Return Air Humidity	R
AV006	Outside Air CFM	R
BV003	Supply Air Fan Status	R
BV058	Compressor 1 Status	R
BV071	Compressor 2 Status	R
BV072	Compressor 3 Status	R

DATE: 1/16/2014

SUBMITTED BY: NSS

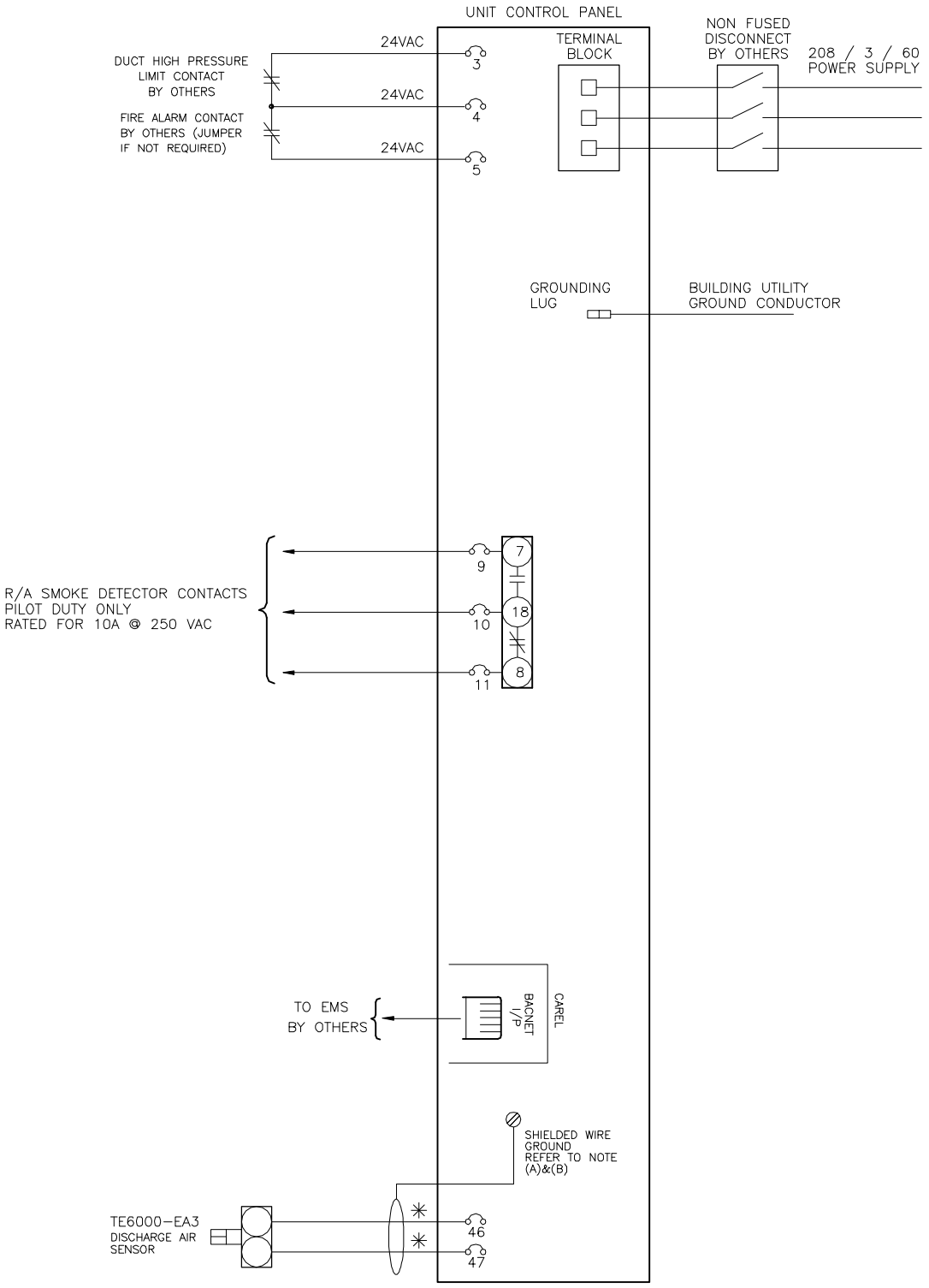

MAXIMUM CONTROL CIRCUIT AMPACITY 14.6 AMPS AT 24 VAC

✳✳ SHIELDED WIRE IS REQUIRED WITH BMS ANALOG SIGNALS.
TAPE OTHER END OF GROUND WIRE & SHIELD ENDS OF ANY UNUSED WIRES.

✳ SHIELDED WIRE IS REQUIRED WITH ELECTRONIC COMPONENTS.

(A) SHIELDED WIRE TO BE GROUNDED AT MAIN ENG A CONTROL CABINET END ONLY.
TAPE OTHER END OF GROUND WIRE & SHIELD ENDS OF ANY UNUSED WIRES.

(B) ENGINEERED AIR STRONGLY RECOMMENDS THAT THE SHIPPED LOOSE DISCHARGE AIR SENSOR BE MOUNTED 5-10 FT. DOWN STREAM OF HEAT EXCHANGER DISCHARGE OPENING TO AVOID TEMPERATURE SWING CAUSED BY RADIANT HEAT.

1. FIELD WIRING VOLTAGE DROP NOT TO EXCEED 10%.
2. ALL WIRING SHOWN SHALL BE COMPLETED BY INSTALLER.
3. ALL WIRING TO COMPLY WITH THE NATIONAL ELECTRICAL CODE.

TAG: RTU-7 *(Indicated as RTU-3 on TCE's Drawings)*

FIELD WIRING DIAGRAM
FW_DJSERIES

EngA®

ENGINEERED AIR®

REVISIONS:

DATE:	DRN.BY:	CHKD.BY:	DRWG.NO.:
JAN 8 2014	NSS		06927F-07-1

DK6927 (RV655) U:CAD\DRAWINGS\FW_DJ

EngA ENGINEERED AIR

SUBMITTAL RECORD

JOB NAME: GRAFTON BETHEL ES PHASE III] **JOB NO:** DK6927(RV655)

CUSTOMER: YORK COUNTY SCHOOLS **ENGINEER:** THOMPSON CONSULTING ENGINEERS

EngA MODEL: FWE143/DJX20/HRW1200/HRP/C/O/MV **QTY:** 1 **TAG:** RVU-5

(Indicated as RVU-3 on TCE's Drawings)

SHIPPING AND APPROVAL INFORMATION

MOUNTING Outdoor Base Mounted c/w Prefab Roof Curb **ACCESS** As Per Drawing

UNIT MINIMUM AMBIENT -20°F **SHIPPING WEIGHT** 8550 lb **OPERATING WEIGHT** 8850 lb

NO. OF PIECES 3 (Unit + Curb + Hood)

- ETL approval.
- Operating weight includes curb.

SUPPLY AIR DATA

AIR FLOW	3,485 CFM	**FAN SIZE**	(1) 122 BAE-DIDW	**TSP**	4.8 in w.c.	**RPM**	3558
MOTOR SIZE	5 HP	**TYPE (RPM)**	Super 'E' ODP (3450)	**ESP**	0.75 in w.c.	**BHP**	3.98 BHP

- Supply air fan/motor c/w spring vibration isolation, piezometer ring w/ transducer, scroll access and pillow block bearings.
- Unit mounted ABB adjustable speed drive (air balancing only) c/w integral line reactors, vented control cabinet, control cabinet heater and manual bypass.

EXHAUST AIR DATA

AIR FLOW	3,329 CFM	**FAN SIZE**	(1) 10/10 FC DIDW	**TSP**	3.6 in w.c.	**RPM**	1857
MOTOR SIZE	5 HP	**TYPE (RPM)**	Super 'E' ODP (1750)	**ESP**	0.75 in w.c.	**BHP**	3.44 BHP

- Exhaust air fan/motor c/w spring vibration isolation and pillow block bearings.
- Unit mounted ABB adjustable speed drive (air balancing only) c/w integral line reactors, vented control cabinet, control cabinet heater and manual bypass.
- Exhaust air data includes 344 CFM purge (ie 2985 CFM + 344 CFM purge = 3,329 CFM)

AIR OPENING DATA

AIR OPENING	LOCATION	DAMPER TYPE	OPERATION
SUPPLY AIR	See Below [1]		
RETURN AIR	See Below [1]		
OUTSIDE AIR	See Below [1]	RUSKIN CD-50 Low Leakage Aluminum Air-foil Parallel Blade	Two Position
EXHAUST AIR	See Below [1]	RUSKIN CD-50 Low Leakage Aluminum Air-foil Opposed Blade	Two Position

- [1] - See Mechanical Drawing

CONSTRUCTION DATA

UNIT CABINET	18 gauge satin coat galvanized sheet metal c/w 2" 3 lb/ft³ insulation on entire unit casing.
UNIT LINER	22 gauge solid liner throughout but not including unit underside.
UNIT FLOOR	18 gauge satin coat galvanized sheet metal on entire unit floor. Floor c/w floor drain connection through base frame (see mechanical drawing for locations)
EXTERIOR PAINT	DTM Polyurethane paint finish (color to be advised) on all exterior surface but not including unit underside.
AIRSIDE DOOR	All access - deluxe welded steel framed hinged c/w lever type door handles , stainless steel piano hinges, handles interlocked, and bulb seal gasket.
SERVICE DOOR	Electrical, burner and compressor access - hinged c/w lever type door handle
DRAIN PAN	18 gauge 304L stainless steel drain pan c/w floor drain connection through casing on DX coil section, DX coil header section and heat pipe supply and exhaust leaving section. 18 gauge satin coat galvanized drain pan c/w floor drain connection through base frame on heat wheel supply and exhaust leaving section.

- Expanded steel grating over return air floor opening.
- EngA drainable weather louvre(s) c/w 1" bird screen.

DATE 17-Jan-2014

Continued on page 2

EngA ENGINEERED AIR

SUBMITTAL RECORD

JOB NAME: GRAFTON BETHEL ES PHASE III] **JOB NO:** DK6927(RV655)

CUSTOMER: YORK COUNTY SCHOOLS **ENGINEER:** THOMPSON CONSULTING ENGINEERS

EngA MODEL: FWE143/DJX20/HRW1200/HRP/C/O/MV **QTY:** 1 **TAG:** RVU-5

(Indicated as RVU-3 on TCE's Drawings)

CONSTRUCTION DATA (CONTINUED)

- 6" x 6" electrical chase.
- Heat Pipe : (1) QDT Heat pipe energy reclaim coil installed (See attached performance data).
- Heat wheel : (1) HRW enthalpy wheel c/w AC motor(See attached performance data).
- Humid Climate Construction c/w slope roof.

ELECTRICAL DATA

POWER SUPPLY	MINIMUM CIRCUIT AMPACITY	MAXIMUM FUSE(D.E.)	MAXIMUM BREAKER
208 / 3 / 60	102.9 AMPS	110 AMPS	110 AMPS

- See Electrical Data Sheet for details.
- Smoke detector provided by others. Installed by EngA mounted in return air opening.
- MCA based on ABB VFD amps for supply and exhaust motor.

SUPPLY FILTER SECTION DATA - Side Loaded

FILTER TYPE Pleated Filter with MERV 8 rating c/w Metal Frame

QTY/SIZE 2 - 24 x 24 x 2" **QTY/SIZE**

TOTAL GROSS AREA 8.00 SQ.FT. **FACE VELOCITY** 479 FPM @ 3829 CFM

- Filters may be shipped loose or mounted in the tracks.
- 1 spare set of filters - shipped loose

RETURN FILTER SECTION DATA - Side Loaded

FILTER TYPE Pleated Filter with MERV 8 rating

QTY/SIZE 2 - 24 x 24 x 2" **QTY/SIZE**

TOTAL GROSS AREA 8.00 SQ.FT. **FACE VELOCITY** 373 FPM @ 2985 CFM

- Filters may be shipped loose or mounted in the tracks.
- 1 spare set of filters - shipped loose

BURNER HEATING DATA - INDIRECT FIRED (DJX-20)

POWER BURNER EngA 'HT' Series **HEAT EXCH. MATERIAL** Stainless Steel

FUEL Natural Gas **INLET PRESSURE** 7 in wc. **GAS FIELD CONN.** 0.75"

HEAT INPUT 150,000 Btuh **HEAT OUTPUT** 135,000 Btuh **TEMP. RISE** 36.0 °F

- EngA (15 : 1) high turndown burner
- Three pass heat exchanger c/w condensate drain connection. Condensate drain piping must be fully piped to a suitable drain before starting unit.
- Heat exchanger section has 1" 1.5 lb/ft³ insulation with 22 gauge solid liner
- Modulating combustion air and gas control.
- Heating is controlled by CTRAC controller.
- Condensate drain connection through curb. See roof curb drawing for details..

AIR COOLED DX SYSTEM DATA

COIL SIZE 37.5 x 27 x 8R x 8 FPI **VELOCITY** 496 FPM

CAPACITY 166,200 Btuh **AIR P.D.** 0.9 in.wc.

ENTERING AIR DB / WB 71.8°F / 66.9°F **LEAVING AIR DB / WB** 51.2°F / 51.1°F

DESIGN AMBIENT TEMP 95°F **SST/SCT** 44.2°F / 114.7°F **REFRIGERANT TYPE** R-407C

COMPRESSOR TYPE Hermetic Scroll **MODEL** ZR54K5E-TF5-130 **QUANTITY** 3

- DX cooling coil c/w alternate tube circuiting, hot gas bypass on lead compressor circuit and stainless steel drain pan.

Continued on page 3

JOB NAME: GRAFTON BETHEL ES PHASE III] **JOB NO:** DK6927(RV655)

EngA MODEL: FWE143/DJX20/HRW1200/HRP/C/O/MV **QTY:** 1 **TAG:** RVU-5

(Indicated as RVU-3 on TCE's Drawings)

AIR COOLED DX SYSTEM DATA (CONTINUED)

- CTRAC discharge air control c/w EMS reset - provides 3 stages of mechanical cooling modulates economizer for free cooling and interfaces with heating control.
- CTRAC Integral low limit auto bypass; set @ 40°F.
- Mechanical cooling operates down to 50°F ambient temperature.
- DX coil compressor circuits c/w insulated suction line, TX valve, sight glass, low pressure control and liquid line filter/drier.
- Condenser coil c/w hail guard.

SHIPPED LOOSE ITEMS (See filter sections for filters and spare filters)

1 - Pre fabricated roof curb (See drawing for details).
1 - Exhaust hood c/w 1" birdscreen.
1 - Flue Diverter
1 - DJX condensate drain pipe - 42"
1 - Axiom NT25 Tank Condensate Neutralization
1 - Discharge Air Temperature Sensor

EngA ENGINEERED AIR

PACKAGED AIR COOLED SYSTEM PERFORMANCE DATA - EEV UNIT

Version 3.4.3E

Job Name: _____ **Job No.:** 6927 (RV655)

Customer: _____ **Tag No.:** _____

Location: Richmond, VA **Altitude:** 0 feet

(Indicated as RVU-3 on TCE's Drawings)

Coil Tag	RVU-5 FIN
Unit Model	FWE143
Compressor Qty & Model(s) [Refrigerant]	(3) ZR54K5E [R-407C]
Summer Ambient / Roof Effect, °F	92.0 / 15.0
Cond. Coil Size, in (H x L x R x FPI)	(1 @ 64) x 82 x 3R 16 (3/8" c/w 1" space)
Cond. Header Qty. & Size, in	(3) 7/8
Cond. Coil Circuiting / Ton/Circ (Ton)	15P - 12C - 12(subC + B) / 1.15
Cond. Fan Qty & Type or BHP, Eff.	(2) 26E c/w 1.0 HP
Cond. Tube PD, PSI / Comp HOC	6.4 / 1.26
Cond. Fx / Airflow, CFM, PD, in.wc.	0.75 / 14337, 0.16
DX Coil Size, in (H x L x R x FPI)	37.5 x 27 x 8R 8 (Alternate)
DX Coil Size, mm (H x L x R x FPI)	-
DX Coil Circuiting	16P - 15C - 0B
Header Qty. & Size, in	(3) 7/8
DX Tube PD, PSI / Velocity, FPM	1.6 / 1283.5
Distributors Qty. & Size	(3) 4-3-5
Distributors Pressure Drop, PSI	51.9
Distributors Nominal Load (%)	126
# of HGBP / Ton/Circ (Ton)	1 / 0.92
Design Ambient, °F DB	95.0
Net Capacity, MBH	163.0
Total / Sensible Capacity, MBH	166.2 / 77.4
Air Flow Conditions	Standard CFM
Total / DX Air Flow, CFM	3485 / 3485
Air EDBT, °F / EWBT, °F	71.8 / 66.9
DX LDBT / LWBT, °F	51.2 / 51.1
D/A LDBT / LWBT, °F	52.1 / 51.3
Water Removal, lb/h	80.0
Drain Pan, in / No. of Mid. Pan	6 / 0
Leaving Coil Velocity, AFPM	481
Coil Pressure Drop, in.wc.	0.90
SST / SCT, °F	44.2 / 114.7
S/A Motor Information	1.07 BHP @ 86.5% Draw Thru
R/A Motor Information	
EER/ IEER Under design condition	-
CSA C746-06 EER	11.00
AHRI 340/360-2007 EER / IEER	11.0 / 11.2
Notes	2,6

Notes:
[2] The coil performance data is based on R-407C refrigerant.
[6] Mixed air application.

Submitted By: NSS Date: 1/16/2014

EngA ENGINEERED AIR

HEAT PIPE PERFORMANCE DATA
Version 1.2.9

JOB NAME: GRAFTON BETHEL ES PHASE III] **JOB NO:** DK6927(RV655)

CUSTOMER: YORK COUNTY SCHOOLS **ENGINEER:** THOMPSON CONSULTING ENGINEERS

LOCATION: Richmond, VA **ALTITUDE:** 0 ft (.0 m)

EngA MODEL: FWE143/DJX20/HRW1200/C/O **QTY:** 1 **TAG:** RVU-5

(Indicated as RVU-3 on TCE's Drawings)

Heat Pipe Selection Data - HVAC			
		Supply	Exhaust
Summer Design Without Evaporative Cooling	Fan Location	Heat Pipe Outlet	Heat Pipe Outlet
	Air Flow Through Pipe	3485 SCFM	2985 SCFM
	Standard Velocity Thr Pipe	412 fpm	409 fpm
	Entering Temp. DB/WB	51.2/51.1°F	78.0/65.0°F
	Leaving Temp. DB/WB(RH)	66.1/57.0°F(57%)	60.6/59.0°F(91%)
	Air Pressure Drop	0.45"wc	0.46"wc
	Energy Recovery	56.1 Mbh	
	Supply Recovery Factor	55.7%	
Winter Design	Fan Location	Heat Pipe Outlet	Heat Pipe Outlet
	Air Flow Through Pipe	3485 SCFM	2985 SCFM
	Standard Velocity Thr Pipe	412 fpm	409 fpm
	Entering Temp. DB/WB	37.4/35.4°F	68.0/54.0°F
	Leaving Temp. DB/WB(RH)	54.4/44.2°F(42%)	48.1/45.2°F(80%)
	Air Pressure Drop	0.44"wc	0.45"wc
	Energy Recovery	64.1 Mbh	
	Supply Recovery Factor	55.7%	
	Tilt Control Factor		3052
	Moisture Condensed Out		0.00 Lbs/Min
	Frost Point		9.5°F

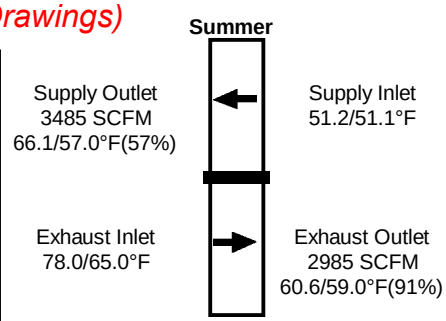

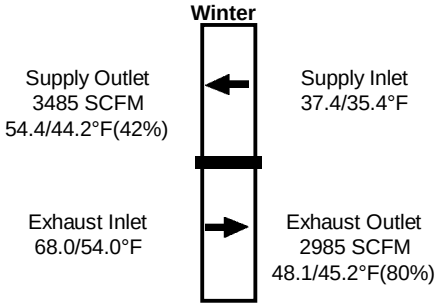

System: (1) Tru in an integrated tilt package
Type: Corrugate Aluminum fin, 5/8" O.D. aluminum tube

Unit ID	TRU Model	Face Height	Face Length	Row	Exh FPI	Sup FPI	Type	Exh Length	Sup Length	Weight (LBS)
1	**TRU-120**	**- 42**	**- 54**	**- 6**	**- 12E**	**- 12S**	**- AC5**	**- 25**	29	360

Unit(Dimensions are in inches)	Length	Width	Height
Integrated tilt package model: TP-120-3F-10	78	36	56
Integrated tilt package crated dimensions:	84	40	59

Unit	Weight in lbs
TRU unit weight	360
Integrated tilt package w/o Tru(s)	552
Total system weight	912
Crated system weight	1188

DATE: 16-Jan-2014 **SUBMITTED BY:** NSS

ENTHALPY WHEEL PERFORMANCE DATA

Version 1.1.4

JOB NAME: GRAFTON BETHEL ES PHASE III] **JOB NO:** DK6927(RV655)

CUSTOMER: YORK COUNTY SCHOOLS **ENGINEER:** THOMPSON CONSULTING ENGINEERS

LOCATION: Richmond, VA **ALTITUDE:** 0 ft (.0 m)

EngA MODEL: FWE143/DJX20/HRW1200/C/O **QTY:** 1 **TAG:** RVU-5

(Indicated as RVU-3 on TCE's Drawings)

Enthalpy Wheel Selection Data - Model AEW-1200 (Note 1)			
		Supply	Exhaust
Summer Design	Inlet Static Pressure	-0.8"Wc	-1.75"Wc
	Air Flow Through wheel	3485 Scfm Outlet	2985 Scfm Inlet
	Entering Temperature DB(RH)/WB	95.0/78.0°F	60.6/59.0°F
	Leaving Temperature DB/WB(RH)	71.8/66.9°F(77%)	87.7/73.9°F(52%)
	Air Pressure Drop	0.99"Wc	0.83"Wc
	Enthalpy Recovery	157.58 Mbh	
	Sensible Recovery	87.30 Mbh	
	Moisture Removal	59.74 Lb/Hr	
	S/A Sensible/Total Efficiency	67.4% / 63.8%	
	ASHRAE Sensible/Total Effectiveness	78.7% / 74.4%	
Winter Design (Note 2)	Inlet Static Pressure	-0.8"Wc	-1.75"Wc
	Air Flow Through wheel	3485 Scfm Outlet	2985 Scfm Inlet
	Entering Temperature DB(RH)/WB	15.0/12.0°F	48.1/45.2°F
	Leaving Temperature DB/WB(RH)	37.3/35.3°F(82%)	22.0/21.3°F(89%)
	Air Pressure Drop	0.88"Wc	0.76"Wc
	Enthalpy Recovery	136.52 Mbh	
	Sensible Recovery	84.00 Mbh	
	Moisture Addition	48.4 Lb/Hr	
	Frost Point	14.5°F	
	ASHRAE Sensible/Total Effectiveness	Note 3	

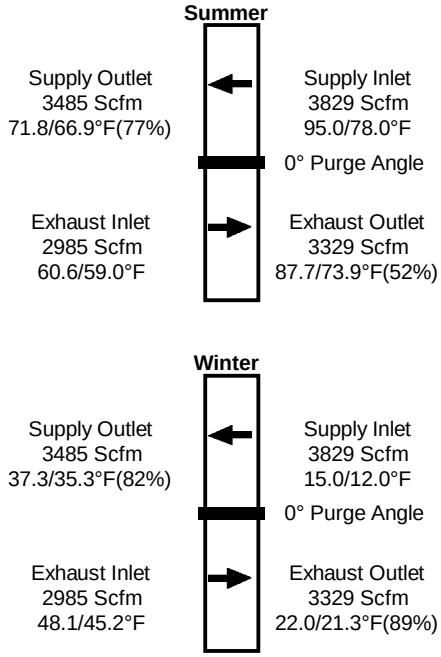

Notes:
1. Energy recovery component certified to the ARI Air-to-Air Energy Recovery Ventilation Equipment Certification Program in accordance with ARI Standard 1060-2001
2. Wheel performance in the winter design section includes the effects of frost control.
3. Without taking frost control into account, the ASHRAE Sensible/Total effectiveness is 78.7% / 76.4%. The supply leaving db/wb will be 37.3/35.3°F and the exhaust leaving db/wb will be 22.0/22.0°F.

DATE: 16-Jan-2014 **SUBMITTED BY:** NSS

Customer: GRAFTON BETHEL ES PHASE III	Fan Tag: RVU-5 SA
Job ID: DK6927	Model: 122 BAE-DW
CL K	*(Indicated as RVU-3 on TCE's Drawings)*

94

TWIN CITY FAN AND BLOWER PERFORMANCE CURVE

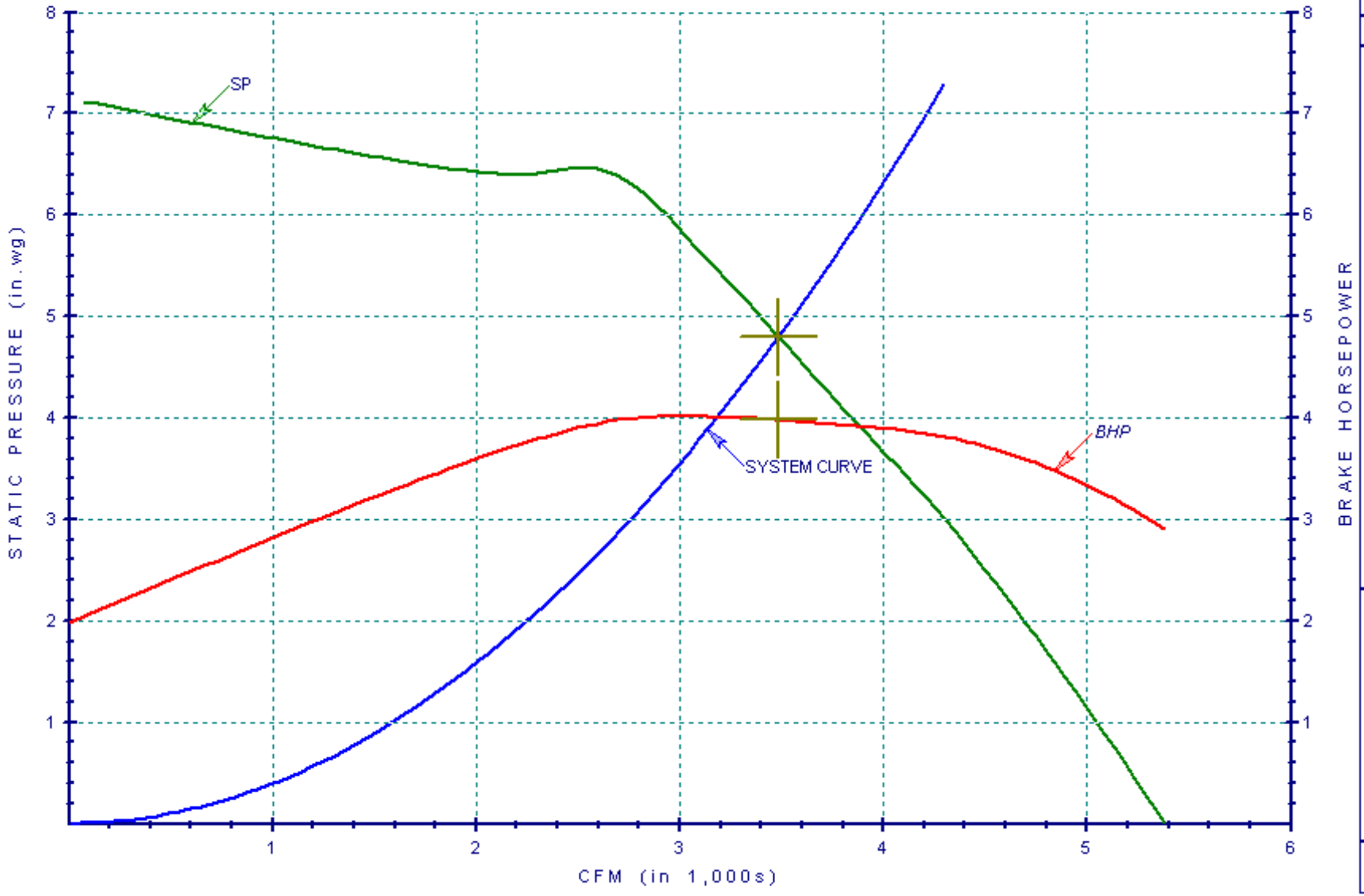

CFM:	3,485
SP:	4.8 in.wg
RPM:	3558
BHP:	3.98
Outlet Velocity:	2,248
Density:	0.075

Sound Power Level

Octave	In/Out
1	85 / 94
2	86 / 92
3	89 / 90
4	94 / 91
5	87 / 89
6	84 / 87
7	80 / 81
8	74 / 75

in db re 10^{-12} watts

1/2/2014

RVU-5

(Indicated as RVU-3 on TCE's Drawings)

MODEL A10-10A

Selection Input	Input Flow 3297 CFM	Input Pressure 3.60 in-wg	Temperature 70 F	Altitude 0 ft	Q Derate 0 CFM	P Derate 0.00 in-wg	VAV Set Point 0.00 in-wg		Date 01-02-2014
Selection Output	Flow 3297 CFM	Pressure 3.60 in-wg	Power 3.39 hp	Static Efficiency 55.1 %	Total Efficiency 64.6 %	Speed 1855 rpm	Outlet Velocity 3232 fpm		
	Impeller Diameter 10.0 in	Outlet Area 1.02 ft²	Max Speed 2518 rpm	AMCA Class II	Drive Belt Drive	Blades 48	P Volume 3.9 ft³	Turndown 100 %	

Performance

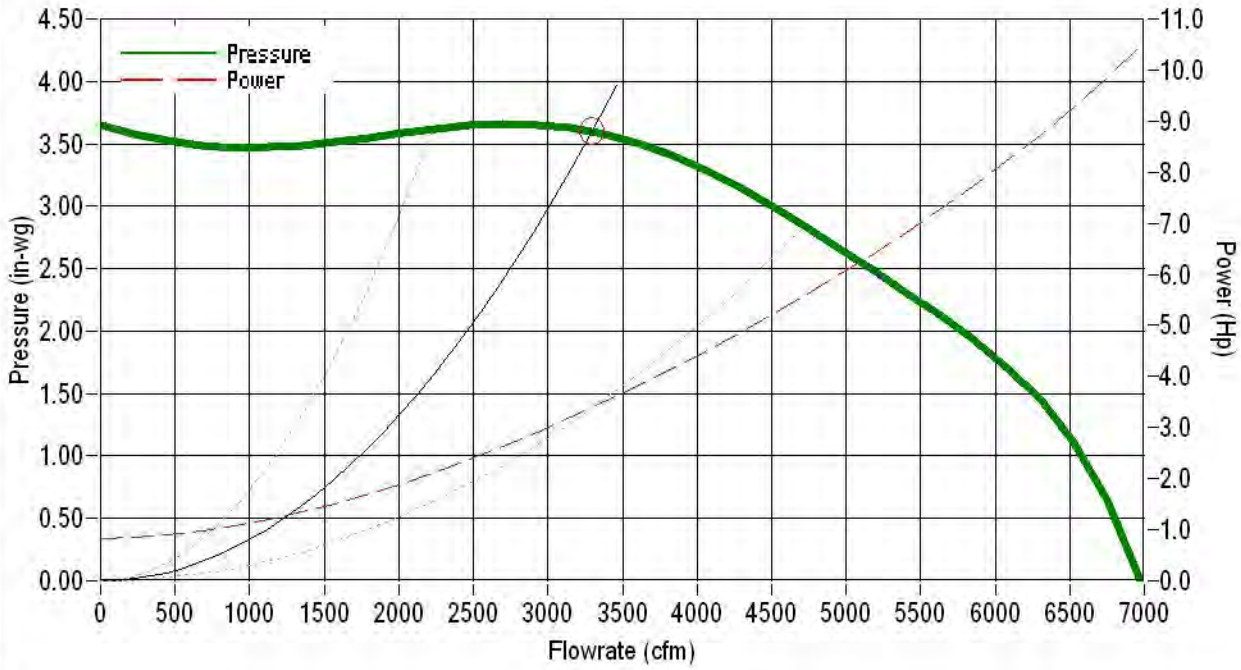

Sound (Lwi)	63	125	250	500	1000	2000	4000	8000	Lw	LwA
	90	90	87	84	83	83	80	78	95	90

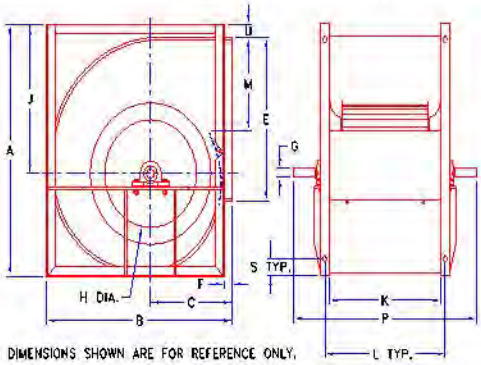

Options

Available Bore (9 inch diameter wheels): 3/4, 1, 1-3/16, 1-7/16, 1-11/16, 1-15/16, 2-1/4, 3 inch
Available Bore (11 inch diameter wheels): 3/4, 1 and 1-3/16 inch
Additional Bores (12 inch diameter wheels): 3, 4, and 4-1/2 inch
Additional Bores (15 through 20 inch diameter wheels): 3, 4, 4-1/2, 5 inch
Center disc lock style: Preslok
Adjustable motor base

A	B	C	E	F	G	H	J	K	L	M	P	S	U
18.62	16.81	7.94	11.38	1.00	0.75	8.81	10.69	13.12	14.88	7.00	21.38	1.00	1.00

Dimensions in inches

Notes: Airflow performance data are obtained in accordance with AMCA 210-07. Installed performance will vary depending on extent of cabinet geometry

Sound data are estimated from industry experience for the type of product selected. Data should be used for comparison purposes only and do not represent installed values.

VIEW A–A

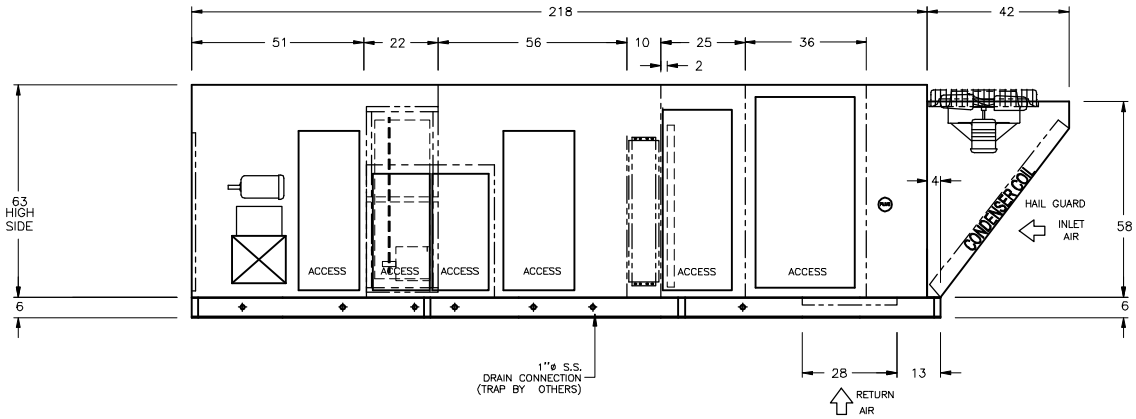

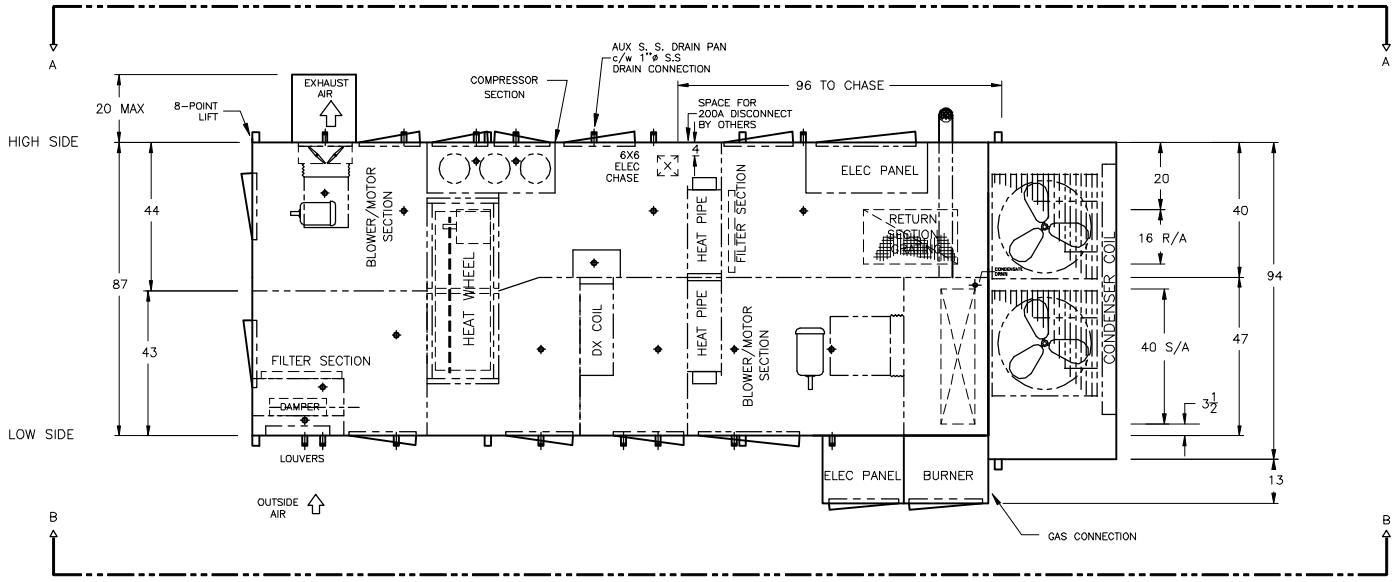

VIEW B–B

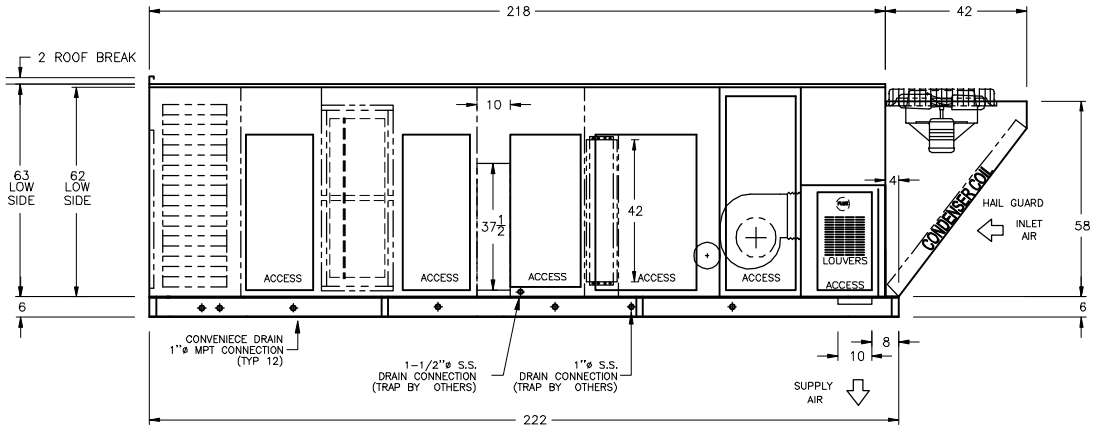

DOOR SIZES AND INTERNAL COMPONENTS ARE APPROX. VALUES. DIMENSIONS SHOWN IN INCHES ONLY UNLESS OTHERWISE NOTED.

DK6927 (RV655)

TAG: RVU-5 *(Indicated as RVU-3 on TCE's Drawings)*

FWE143/DJX20/HRW1200/HRP/C/O/MV

HEAT/COOL UNIT

EngA® ENGINEERED AIR®

REVISIONS:			
DATE: JAN 2 2014	DRWN BY: NSS	CHKD BY:	DRWG NO.: 06927M-05-1

U:\CAD\DRAWINGS\HRW\DK6382

ProUnit™

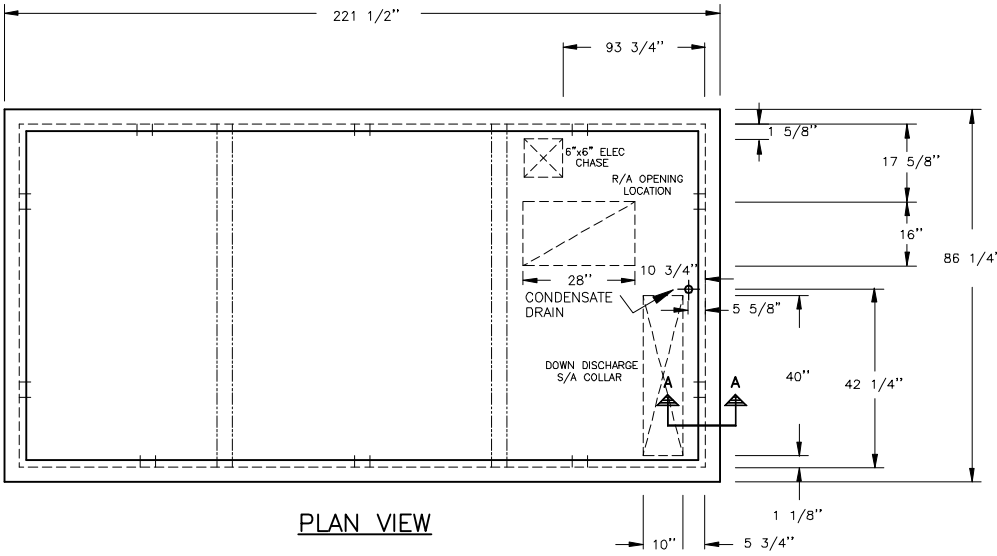

PLAN VIEW

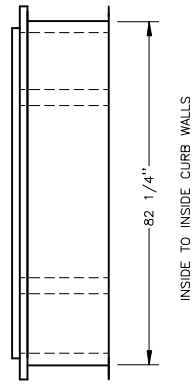

END VIEW

ELEVATION

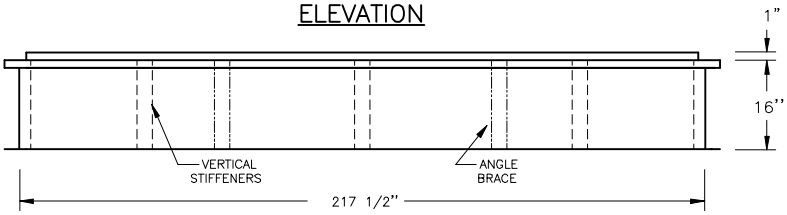

INSIDE TO INSIDE CURB WALLS

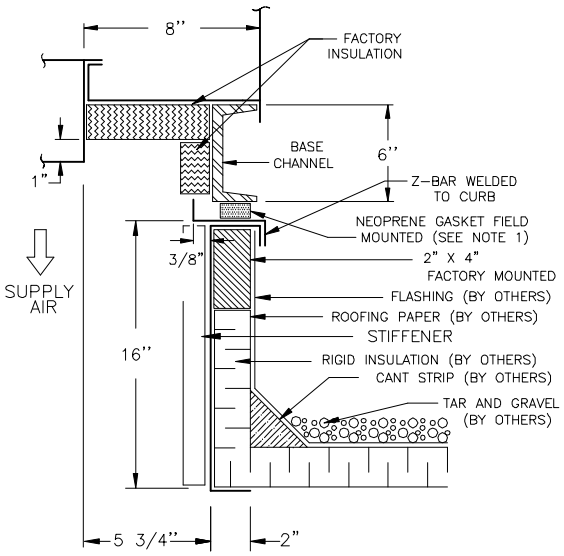

SECTION A–A

NOTES:

1. 3/8" X 3/4" NEOPRENE GASKET FOR 2" TO 4" CHANNELS, OR 3/8" X 1-1/2" NEOPRENE GASKET FOR CHANNELS 6" AND OVER.
2. CURB MAY BE BROKEN DOWN FOR SHIPPING. IN THESE CASES, FIELD ASSEMBLY WILL BE REQUIRED BY INSTALLING CONTRACTOR.
3. CONTINUOUS BASE SUPPORT TO CURB PANELS, INCLUDING THE CENTER SUPPORT PANEL IF SUPPLIED, IS REQUIRED BY OTHERS.
4. DIMENSIONS GIVEN IN INCHES ONLY

AutoCurb™ Phase II version 2.2.10

JOB# DK6927 DRAWING NOT TO SCALE FWE143/DJX20/HRW1200/HRP/O/C/MV

TAG: RVU-5 *(Indicated as RVU-3 on TCE's Drawings)* 16" HIGH CURB FOR DOWN DISCHARGE UNITS

EngA® ENGINEERED AIR®

REVISIONS:			
DATE:	DRWN BY:	CHKD BY:	DRWG NO.:
JAN 02 2014	NSS		06927C-05-1

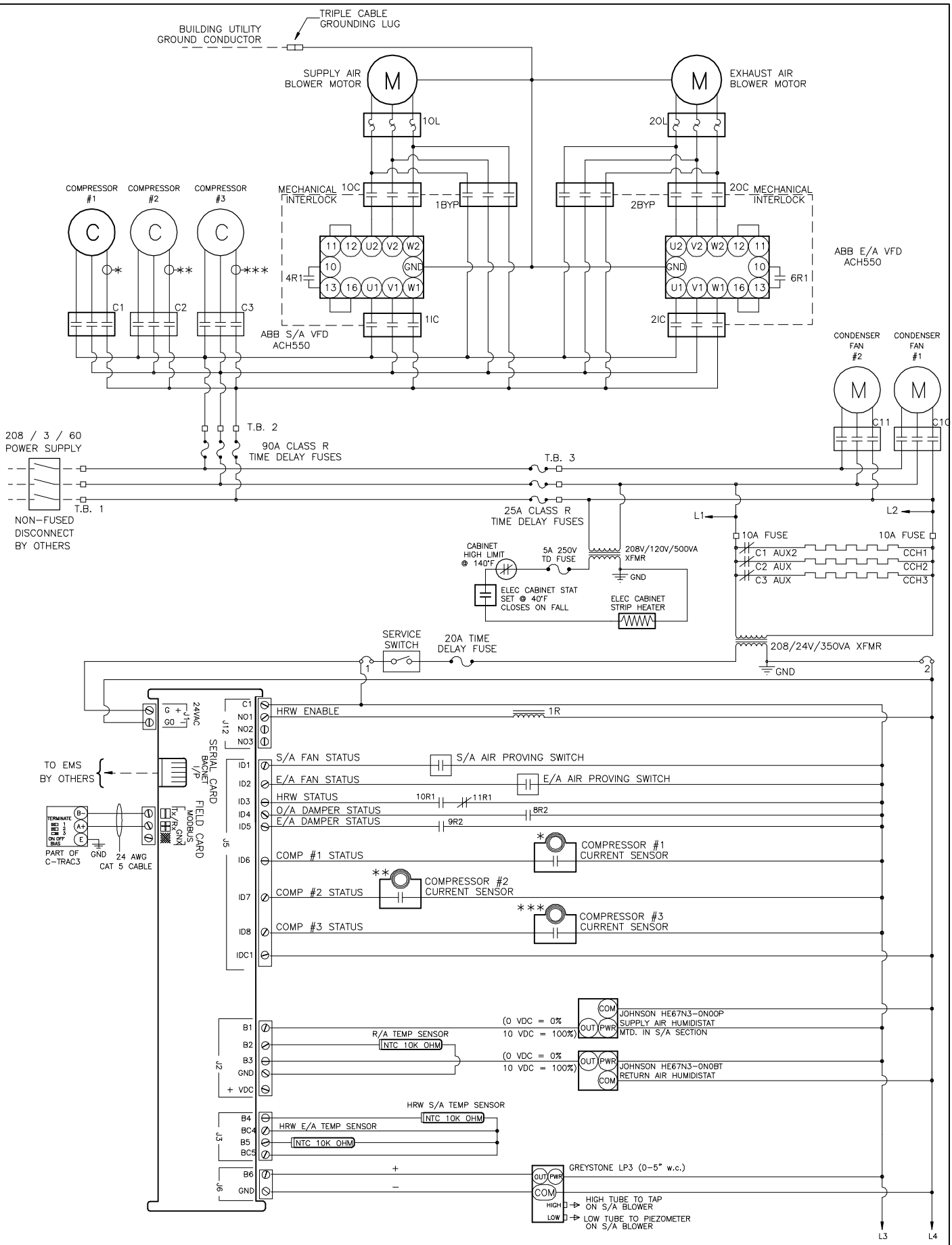

DENOTES FIELD WIRING. REPLACEMENT WIRE MUST BE EQUIVALENT TO ORIGINAL WIRE SUPPLIED.

TAG: RVU-5,-6 *(Indicated as RVU-3, -4, respectively on TCE's Drawings)*

PAGE 1 OF 3

INTERNAL WIRING
FW_DJ SERIES

EngA®

ENGINEERED AIR®

REVISIONS:			
DATE:	DRN.BY:	CHKD.BY:	DRWG.NO.:
JAN 3 2014	NSS		06927E-05-1

DK6927 (RV655) U:\CAD\DRAWINGS\FW_DJ

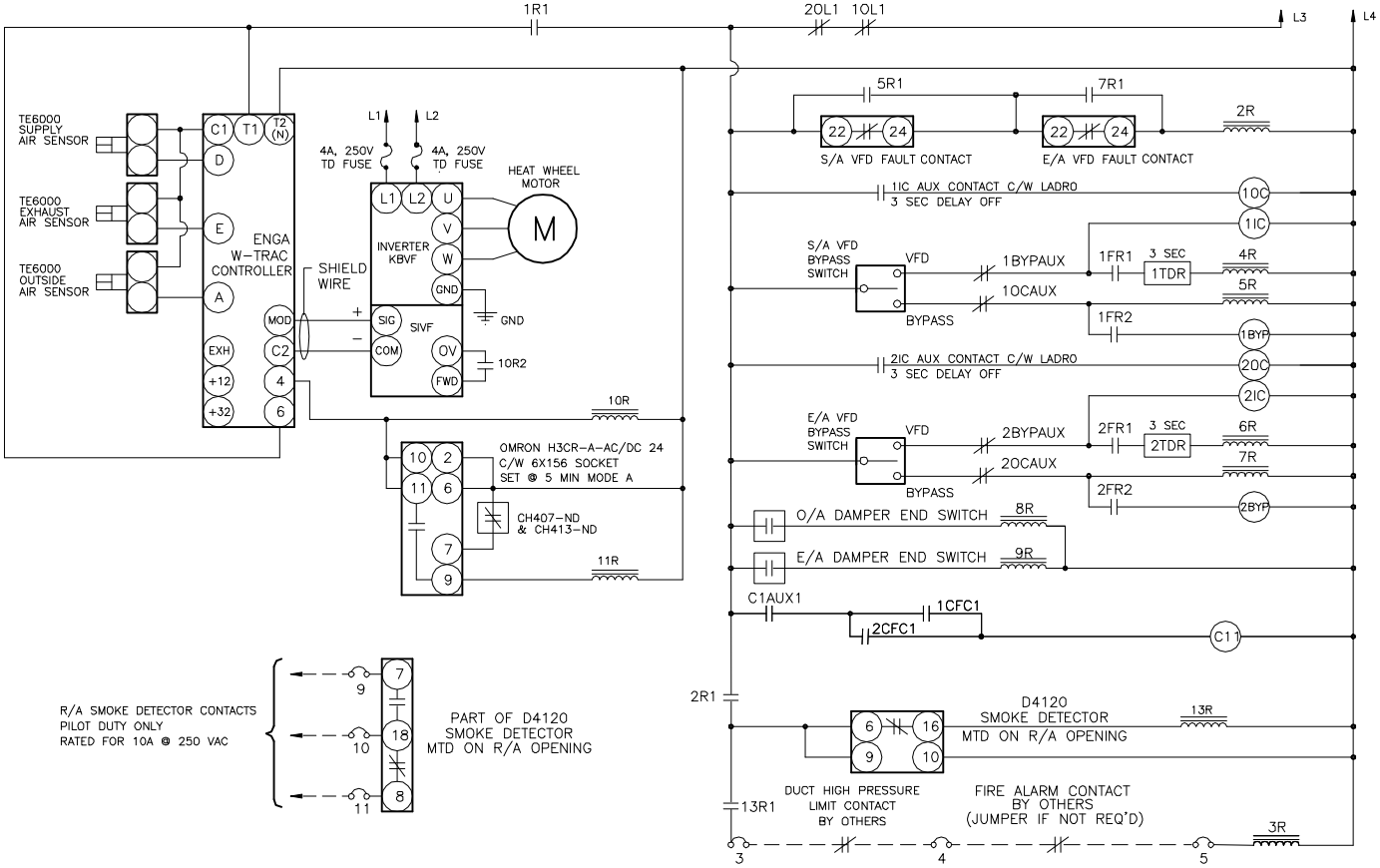

- - - - - - - - DENOTES FIELD WIRING. REPLACEMENT WIRE MUST BE EQUIVALENT TO ORIGINAL WIRE SUPPLIED.

TAG: RVU-5,-6 *(Indicated as RVU-3, -4, respectively on TCE's Drawings)*

PAGE 2 OF 3

INTERNAL WIRING
FW_DJ SERIES

EngA®

ENGINEERED AIR®

REVISIONS:			
DATE:	DRN.BY:	CHKD.BY:	DRWG.NO.:
JAN 3 2014	NSS		06927E-05-2

DK6927 (RV655) U:\CAD\DRAWINGS\FW_DJ

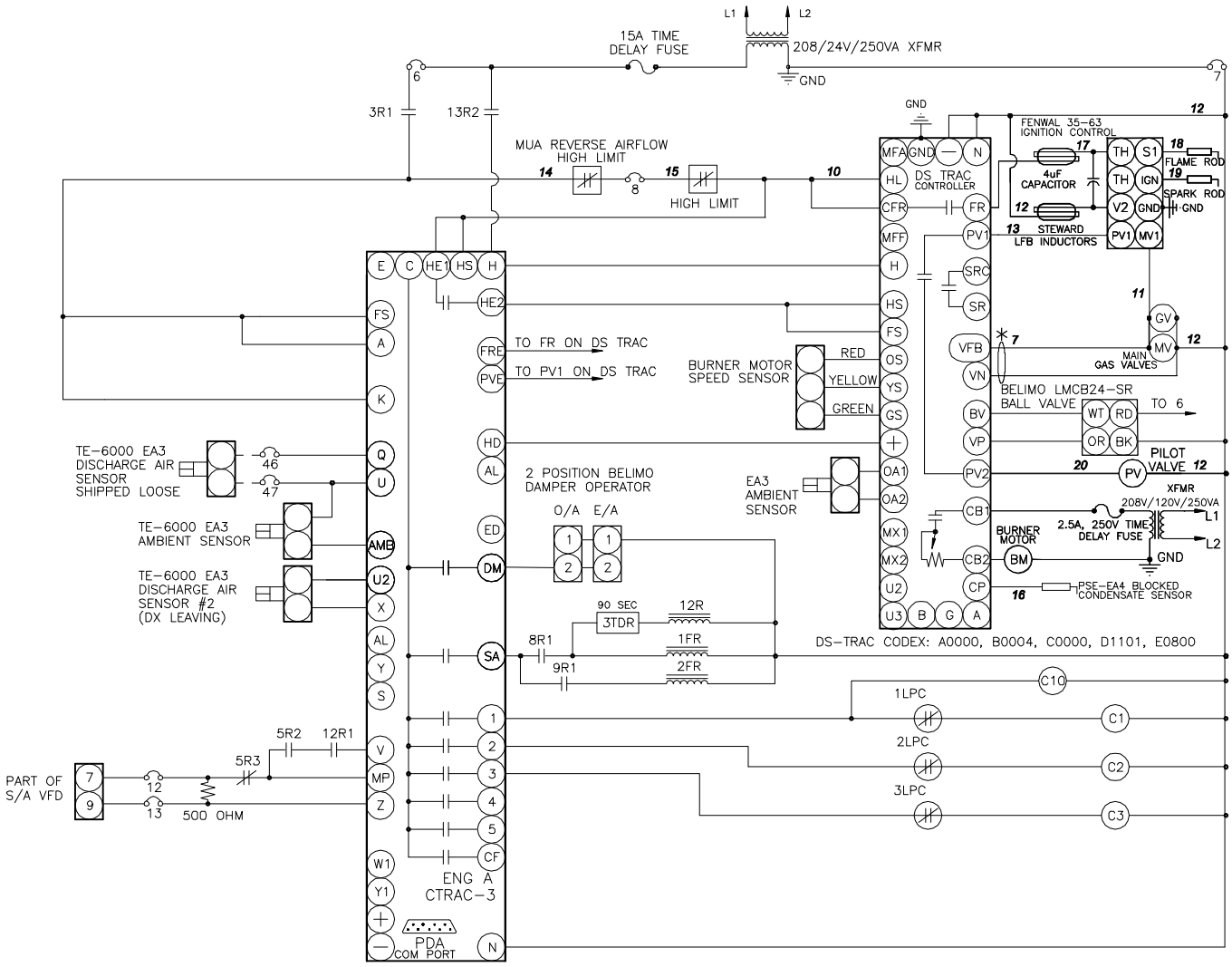

DENOTES FIELD WIRING. REPLACEMENT WIRE MUST BE EQUIVALENT TO ORIGINAL WIRE SUPPLIED.

(Indicated as RVU-3, -4, respectively on TCE's Drawings)

* RED FEEDBACK CABLE HOOKED DIRECTLY TO MAIN GAS VALVE.

TAG: RVU-5,-6

PROGRAM #21

PAGE 3 OF 3

INTERNAL WIRING
FW_DJ SERIES

EngA®

ENGINEERED AIR®

REVISIONS:			
DATE:	DRN.BY:	CHKD.BY:	DRWG.NO.:
JAN 3 2014	NSS		06927E-05-3

DK6927 (RV655) U:\CAD\DRAWINGS\FW_DJ

EngA ENGINEERED AIR

ELECTRICAL DATA

JOB NAME: GRAFTON BETHEL ES PHASE III] **JOB NO:** DK6927(RV655)

EngA MODEL: FWE143/DJX20/HRW1200/HRP/C/O/MV **QTY:** 1 **TAG:** RVU-5

(Indicated as RVU-3 on TCE's Drawings)

Power Supply	Minimum Circuit Ampacity	Terminal Block to Accept	Maximum Fuse (Dual Element)	Maximum Breaker	Minimum Unfused Conductor
208 / 3 / 60	102.9 AMPS	2 Awg	110 AMPS	110 AMPS	8 Awg

Components	Circuit No	Model	Minimum Conductor Size	Ampacity FLA / LRA	SubFuse Group	Subfuse Group Fuse Size	Terminal Block to Subfuse
Supply Fan Motor	1	Super 'E' ODP (3450) 5 HP	8 Awg	12.8	1	90	4 Awg
Exhaust Fan Motor	1	Super 'E' ODP (1750) 5 HP	8 Awg	15.3			
Compressors #1 to #3	1	ZR54K5E-TF5-130	8 Awg	15.4 / 114.0			
Burner Motor(Xfmr)	1	PSC(Use Xfmr) 1/12 HP	14(14) Awg	1.32 @ 120/1/60	2	25	14 Awg
Condenser Fan Motors #1 and #2	1	OPAO 1 HP	14 Awg	3.9			
Crankcase Heaters (3 total)	1		14 Awg	.2			
Main Control Xfmr	1		14 Awg	1.7			
Control Xfmr #1	1		14 Awg	1.2			
Control Xfmr #2	1		14 Awg	4.8			
Heater Xfmr	1		14 Awg	2.4			

UNIT CONTROL PANEL(S) SHORT CIRCUIT CURRENT RATING (SCCR)
Short circuit current 5 kA rms symmetrical, 208 V maximum

WIRING DRAWING LEGEND					
AFS	Auto Fan Switch	DM	Damper Motor	LAR	Low Ambient Relay
C	Contactor	FR	Fan Relay	NFD	Non Fused Disconnect
CCH	Compressor Crankcase Heater	GV1	Low Stage Gas Valve	OL	Thermal Overload
CFC	Condenser Fan Control	GV2	High Stage Gas Valve	OP	Oil Failure Switch
CLC	Compressor Loading Control	HR	Heating Relay	PV	Pilot Gas Valve
CPM	Compressor Protection Module	HLPC	High/Low Pressure Control	R	Relay or Contactor
CP	Internal Compressor Protection	HL	High Limit Control	SS	Sail Switch
CR	Cooling Relay	IGN	Ignition Control	TB	Terminal Block
CUC	Cylinder Unloading Control	LAC	Low Ambient Control	TDR	Time Delay Relay
CUS	Cylinder Unloading Solenoid	LPC	Low Pressure Control	TC	Time Clock

(Continued on second page)

DATE: 17-JAN-2014 **SUBMITTED BY:** STEVE JONES / NSS

EngA ENGINEERED AIR

ELECTRICAL DATA

JOB NAME: GRAFTON BETHEL ES PHASE III] **JOB NO:** DK6927(RV655)

EngA MODEL: FWE143/DJX20/HRW1200/HRP/C/O/MV **QTY:** 1 **TAG:** RVU-5

(Indicated as RVU-3 on TCE's Drawings)

UNIT FUNCTION

CTRAC-3 Program #21

EMS HAS FULL CONTROL OF CTRAC-3

Non fused disconnect switch (by others) 'on', service switch 'on', VFD fault contacts 'closed', smoke detector contact (supplied by others, installed by EngA) 'closed', duct high pressure limit (by others) 'closed', fire alarm contacts (by others) 'closed' (jumper if not required). EMS enable unit 'ON' (BV42). Outside air and exhaust air dampers 'open'. Damper end switches 'closed', the blowers are enabled and run continuously c/w supply and exhaust VFD's for air balancing only.

EMS HRW enable 'on' (BV001), the WTRAC with an adjustable integral set point set at 55°F will modulate the wheel rotation speed to maintain the heat wheel supply air leaving temperature. The heat/cool/vent changeover will automatically switch between heating, cooling, and venting modes as required. WTRAC reduces wheel rotation speed in frost control mode to prevent frost formation.

The C-TRAC3 controller, with an adjustable discharge air setpoint from EMS (AV25), will modulate the heating or cooling (and cycle 3 stages of compressors) to maintain the required discharge air temperature from 50°F to 90°F.

EMS cool mode enabled

If there is a call for cooling (BV47), the C-TRAC3 will begin staging on the mechanical cooling. The DX coil leaving temperature control band is from 50°F to 90°F, controlled via EMS cooling setpoint signal (AV25). Mechanical cooling is locked out below 50°F ambient temperature

EMS heat mode enabled

If the C-TRAC3 is in heating mode (BV48) and there is a call for heating, the C-TRAC3 will close the HE contacts and output a 0 - 10 vdc modulating heating signal directly to the DS-TRAC heating controller to operate all aspects of burner operation. The discharge temperature will be controlled via EMS D/A setpoint signal (AV25), and the discharge air temperature control band is from 50°F to 90°F. Gas heating is disabled above 120°F ambient temperature.

EMS dehumidification mode enabled

When in dehumidification mode (BV43), the C-TRAC3 will enable the cooling to maintain the desired leaving DX coil temperature set by EMS signal (AV27) to achieve the required room relative humidity. The heating is also enabled for reheat to satisfy the required discharge air temperature (AV25).

EMS enable unit 'OFF' (BV42), C-TRAC3 begins shutdown cycle, dampers close, blowers delay off and shut down. If the fire alarm contacts 'open' -or- smoke detector contact (supplied by others, installed by EngA) 'open' -or- duct high pressure limit contact 'open', equipment operation is disabled immediately. If the discharge air temperature falls below 40°F, the C-TRAC3 will shut down fans, close dampers and indicate alarm.

Refer to the C-TRAC3 face mounted LED's for mode indication and status.

Note 1. Compressor(s) cycle has minimum run time, minimum off time and interstage timing.

Note 2. Refer to manuals shipped with unit for more detailed explanation of maintenance, components and controls.

Note 3. Go to www.engineeredair.com/manuals/manuals.asp for online manual details.

Note 4. VFD's have external manual bypass and will go to 60hz.

BACNET control and status variable points list: (See C-TRAC3 BACnet IO&M for additional points)

DATE: 17-JAN-2014 **SUBMITTED BY:** STEVE JONES / NSS

EngA ENGINEERED AIR

JOB NUMBER: DK6927 (RV655)

TAG: RVU-5

Network Control Variable List - C-TRAC3 BACnet

(Indicated as RVU-3 on TCE's Drawings)

Variable	Description	Note
BV36	Air Flow Problem	R
BV26	Ambient Sensor Alarm	R
AV11	Ambient Temperature	R
BV10	Blower Status	R
BV13	Cooling Lockout - Low Ambient Temperature	R
BV5	Cooling Mode - A	R
AV18	Cooling Modulated Output	R
AV17	Cooling Stages % On	R
BV50	Cooling Status - Mechanical Cooling On/Off	R
AV19	Damper % Open	R
BV16	Damper Contact DM closed	R
AV7	Damper Minimum Position	R
BV11	Damper Override Low Discharge Temperature	R
BV19	Discharge Air Low Limit Lockout	R
BV24	Discharge Air Sensor Alarm	R
AV12	Discharge Air Temperature	R
AV14	Discharge Air Temperature Setpoint	R
BV22	DJ or DG Flame Failure Alarm	R
BV21	DJ or DG Prepurge Alarm	R
BV17	Economizer At Minimum Due to High Ambient	R
BV15	Economizer Mode	R
BV6	Economizer Mode - E	R
BV47	EMS Cooling Enabled	R/W
AV1045	EMS Damper Minimum Position Setpoint	R/W
BV43	EMS Dehumidification Enabled	R/W
AV25	EMS Discharge Air Setpoint	W
AV26	EMS Discharge Air Setpoint	R
BV45	EMS Economizer Enabled	R/W
BV48	EMS Heating Enabled	R/W
AV27	EMS Secondary Discharge Air Setpoint	W
AV28	EMS Secondary Discharge Air Setpoint	R
BV42	EMS Unit Command On/Off	R/W
BV14	External Cooling Lockout - A	R
BV41	Heat Fail Lockout	R
BV20	Heat Failure Lockout	R
BV40	Heating Lockout High Ambient Temperature	R
BV7	Heating Mode - HS	R
AV20	Heating Modulating % Output	R
BV39	Heating Status	R
BV23	LMK or HE Failure Alarm	R
BV4	Occupied Mode - FS	R
BV25	Secondary Discharge Air Sensor Alarm	R
AV13	Secondary Discharge Air Temperature	R
BV35	Sensor Failure Alarm	R

DATE: 1/16/2014

SUBMITTED BY: NSS

EngA® ENGINEERED AIR®

JOB NUMBER: DK6927 (RV655)

TAG: RVU-5

Network Control Variable List - C-TRAC3 BACnet

(Indicated as RVU-3 on TCE's Drawings)

Variable	Description	
AV1044	Unit On/Off Status	R
BV8	Unoccupied Mode - K	R
Bv18	VFD Cooling Lockout - Limit Stages due to Low Air Volume	R
AV10	VFD Speed Feedback	R
BV49	Write to Flash	R/W
ADDITIONAL POINTS	----------	
AV001	Supply Air Humidity	R
AV002	Return Air Temperature	R
AV003	Return Air Humidity	R
AV004	Heat Wheel Supply Temp	R
AV005	Heat Wheel Exhaust Temp	R
AV006	Supply Air CFM	R
BV003	Supply Air Fan Status	R
BV058	Exhaust Air Fan Status	R
BV059	Heat Wheel Status	R
BV060	Outside Air Damper Status	R
BV061	Exhaust Air Damper Status	R
BV062	Compressor 1 Status	R
BV063	Compressor 2 Status	R
BV064	Compressor 3 Status	R
BV001	Heat Wheel Enable	R/W

DATE: 1/16/2014

SUBMITTED BY: NSS

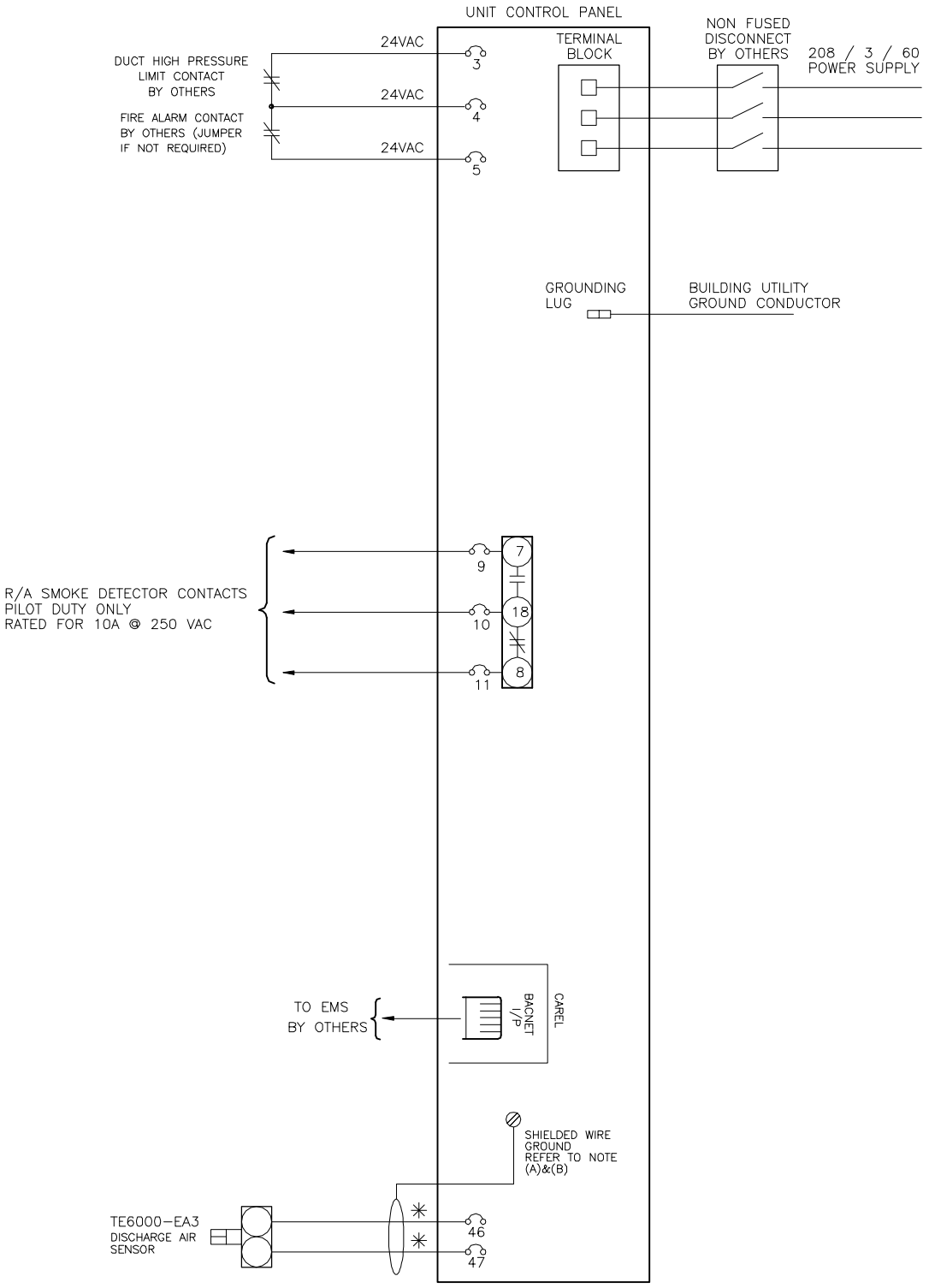

MAXIMUM CONTROL CIRCUIT AMPACITY 14.6 AMPS AT 24 VAC

✳✳ SHIELDED WIRE IS REQUIRED WITH BMS ANALOG SIGNALS.
TAPE OTHER END OF GROUND WIRE & SHIELD ENDS OF ANY UNUSED WIRES.

✳ SHIELDED WIRE IS REQUIRED WITH ELECTRONIC COMPONENTS.

(A) SHIELDED WIRE TO BE GROUNDED AT MAIN ENG A CONTROL CABINET END ONLY.
TAPE OTHER END OF GROUND WIRE & SHIELD ENDS OF ANY UNUSED WIRES.

(B) ENGINEERED AIR STRONGLY RECOMMENDS THAT THE SHIPPED LOOSE DISCHARGE AIR SENSOR BE MOUNTED 5–10 FT. DOWN STREAM OF HEAT EXCHANGER DISCHARGE OPENING TO AVOID TEMPERATURE SWING CAUSED BY RADIANT HEAT.

1. FIELD WIRING VOLTAGE DROP NOT TO EXCEED 10%.
2. ALL WIRING SHOWN SHALL BE COMPLETED BY INSTALLER.
3. ALL WIRING TO COMPLY WITH THE NATIONAL ELECTRICAL CODE.

FIELD WIRING DIAGRAM

TAG: RVU–5,–6 *(Indicated as RVU-3, -4, respectively on TCE's Drawings)*

FW_DJSERIES

EngA®

ENGINEERED AIR®

REVISIONS:			
DATE:	DRN.BY:	CHKD.BY:	DRWG.NO.:
JAN 8 2014	NSS		06927F–05–1

DK6927 (RV655) U:CAD\DRAWINGS\FW_DJ

EngA ENGINEERED AIR

SUBMITTAL RECORD

JOB NAME: GRAFTON BETHEL ES PHASE III] **JOB NO:** DK6927(RV655)

CUSTOMER: YORK COUNTY SCHOOLS **ENGINEER:** THOMPSON CONSULTING ENGINEERS

EngA MODEL: FWE143/DJX20/HRW1200/HRP/C/O/MV **QTY:** 1 **TAG:** RVU-6

(Indicated as RVU-4 on TCE's Drawings)

SHIPPING AND APPROVAL INFORMATION

MOUNTING Outdoor Base Mounted c/w Prefab Roof Curb **ACCESS** As Per Drawing

UNIT MINIMUM AMBIENT -20°F **SHIPPING WEIGHT** 8800 lb **OPERATING WEIGHT** 9000 lb

NO. OF PIECES 3 (Unit + Curb + Hood)

- ETL approval.
- Operating weight includes curb.

SUPPLY AIR DATA

AIR FLOW	3,570 CFM	**FAN SIZE**	(1) 122 BAE-DIDW	**TSP**	4.9 in w.c.	**RPM**	3617
MOTOR SIZE	5 HP	**TYPE (RPM)**	Super 'E' ODP (3450)	**ESP**	0.75 in w.c.	**BHP**	4.18 BHP

- Supply air fan/motor c/w spring vibration isolation, piezometer ring w/ transducer, scroll access and pillow block bearings.
- Unit mounted ABB adjustable speed drive (air balancing only) c/w integral line reactors, vented control cabinet, control cabinet heater and manual bypass.

EXHAUST AIR DATA

AIR FLOW	3,544 CFM	**FAN SIZE**	(1) 10/10 FC DIDW	**TSP**	3.7 in w.c.	**RPM**	1893
MOTOR SIZE	5 HP	**TYPE (RPM)**	Super 'E' ODP (1750)	**ESP**	0.75 in w.c.	**BHP**	3.86 BHP

- Exhaust air fan/motor c/w spring vibration isolation and pillow block bearings.
- Unit mounted ABB adjustable speed drive (air balancing only) c/w integral line reactors, vented control cabinet, control cabinet heater and manual bypass.
- Exhaust air data includes 344 CFM purge (ie 3200 CFM + 344 CFM purge = 3,544 CFM)

AIR OPENING DATA

AIR OPENING	LOCATION	DAMPER TYPE	OPERATION
SUPPLY AIR	See Below [1]		
RETURN AIR	See Below [1]		
OUTSIDE AIR	See Below [1]	RUSKIN CD-50 Low Leakage Aluminum Air-foil Parallel Blade	Two Position
EXHAUST AIR	See Below [1]	RUSKIN CD-50 Low Leakage Aluminum Air-foil Opposed Blade	Two Position

- [1] - See Mechanical Drawing

CONSTRUCTION DATA

UNIT CABINET	18 gauge satin coat galvanized sheet metal c/w 2" 3 lb/ft³ insulation on entire unit casing.
UNIT LINER	22 gauge solid liner throughout but not including unit underside.
UNIT FLOOR	18 gauge satin coat galvanized sheet metal on entire unit floor. Floor c/w floor drain connection through base frame (see mechanical drawing for locations)
EXTERIOR PAINT	DTM Polyurethane paint finish (color to be advised) on all exterior surface but not including unit underside.
AIRSIDE DOOR	All access - deluxe welded steel framed hinged c/w lever type door handles , stainless steel piano hinges, handles interlocked, and bulb seal gasket.
SERVICE DOOR	Electrical, burner and compressor access - hinged c/w lever type door handle
DRAIN PAN	18 gauge 304L stainless steel drain pan c/w floor drain connection through casing on DX coil section, DX coil header section, and heat pipe supply and exhaust leaving section. 18 gauge satin coat galvanized drain pan c/w floor drain connection through base frame on heat wheel supply and exhaust leaving section.

- Expanded steel grating over return air floor opening.
- EngA drainable weather louvre(s) c/w 1" bird screen.

DATE 17-Jan-2014

Continued on page 2

EngA ENGINEERED AIR

SUBMITTAL RECORD

JOB NAME: GRAFTON BETHEL ES PHASE III] **JOB NO:** DK6927(RV655)

CUSTOMER: YORK COUNTY SCHOOLS **ENGINEER:** THOMPSON CONSULTING ENGINEERS

EngA MODEL: FWE143/DJX20/HRW1200/HRP/C/O/MV **QTY:** 1 **TAG:** RVU-6

(Indicated as RVU-4 on TCE's Drawings)

CONSTRUCTION DATA (CONTINUED)

- 6" x 6" electrical chase.
- Heat Pipe : (1) QDT Heat pipe energy reclaim coil installed (See attached performance data).
- Heat wheel : (1) HRW enthalpy wheel c/w AC motor(See attached performance data).
- Humid Climate Construction c/w slope roof.

ELECTRICAL DATA

POWER SUPPLY	MINIMUM CIRCUIT AMPACITY	MAXIMUM FUSE(D.E.)	MAXIMUM BREAKER
208 / 3 / 60	102.9 AMPS	110 AMPS	110 AMPS

- See Electrical Data Sheet for details.
- Smoke detector provided by others. Installed by EngA mounted in return air opening.
- MCA based on ABB VFD amps for supply and exhaust motors.

SUPPLY FILTER SECTION DATA - Side Loaded

FILTER TYPE Pleated Filter with MERV 8 rating c/w Metal Frame

QTY/SIZE 4 - 24 x 20 x 2" **QTY/SIZE**

TOTAL GROSS AREA 13.33 SQ.FT. **FACE VELOCITY** 294 FPM @ 3914 CFM

- Filters may be shipped loose or mounted in the tracks.
- 1 spare set of filters - shipped loose

RETURN FILTER SECTION DATA - Side Loaded

FILTER TYPE Pleated Filter with MERV 8 rating

QTY/SIZE 4 - 24 x 20 x 2" **QTY/SIZE**

TOTAL GROSS AREA 13.33 SQ.FT. **FACE VELOCITY** 240 FPM @ 3200 CFM

- Filters may be shipped loose or mounted in the tracks.
- 1 spare set of filters - shipped loose

BURNER HEATING DATA - INDIRECT FIRED (DJX-20)

POWER BURNER EngA 'HT' Series **HEAT EXCH. MATERIAL** Stainless Steel

FUEL Natural Gas **INLET PRESSURE** 7 in wc. **GAS FIELD CONN.** 0.75"

HEAT INPUT 150,000 Btuh **HEAT OUTPUT** 135,000 Btuh **TEMP. RISE** 35.0 °F

- EngA (15 : 1) high turndown burner
- Three pass heat exchanger c/w condensate drain connection. Condensate drain piping must be fully piped to a suitable drain before starting unit.
- Heat exchanger section has 1" 1.5 lb/ft³ insulation with 22 gauge solid liner
- Modulating combustion air and gas control.
- Heating is controlled by CTRAC controller.
- Condensate drain connection through curb. See roof curb drawing for details..

AIR COOLED DX SYSTEM DATA

COIL SIZE 37.5 x 27 x 8R x 8 FPI **VELOCITY** 508 FPM

CAPACITY 166,300 Btuh **AIR P.D.** 0.93 in.wc.

ENTERING AIR DB / WB 71.6°F / 66.6°F **LEAVING AIR DB / WB** 51.2°F / 51.0°F

DESIGN AMBIENT TEMP 95°F **SST/SCT** 44.2°F / 114.7°F **REFRIGERANT TYPE** R-407C

COMPRESSOR TYPE Hermetic Scroll **MODEL** ZR54K5E-TF5-130 **QUANTITY** 3

- DX cooling coil c/w alternate tube circuiting, hot gas bypass on lead compressor circuit and stainless steel drain pan.

Continued on page 3

EngA ENGINEERED AIR

SUBMITTAL RECORD

JOB NAME: GRAFTON BETHEL ES PHASE III] **JOB NO:** DK6927(RV655)

EngA MODEL: FWE143/DJX20/HRW1200/HRP/C/O/MV **QTY:** 1 **TAG:** RVU-6

(Indicated as RVU-4 on TCE's Drawings)

AIR COOLED DX SYSTEM DATA (CONTINUED)

- CTRAC discharge air control c/w EMS reset - provides 3 stages of mechanical cooling modulates economizer for free cooling and interfaces with heating control.
- CTRAC Integral low limit auto bypass; set @ 40°F.
- Mechanical cooling operates down to 50°F ambient temperature.
- DX coil compressor circuits c/w insulated suction line, TX valve, sight glass, low pressure control and liquid line filter/drier.
- Condenser coil c/w hail gaurd.

SHIPPED LOOSE ITEMS (See filter sections for filters and spare filters)

1 - Pre fabricated roof curb (See drawing for details).
1 - Exhaust hood c/w 1" birdscreen.
1 - Flue Diverter
1 - DJX condensate drain pipe - 42"
1 - Axiom NT25 Tank Condensate Neutralization
1 - Discharge Air Temperature Sensor

EngA ENGINEERED AIR

PACKAGED AIR COOLED SYSTEM PERFORMANCE DATA - EEV UNIT

Version 3.4.3E

Job Name: _____ **Job No.:** 6927 (RV655)

Customer: _____ **Tag No.:** _____

Location: Richmond, VA **Altitude:** 0 feet

Coil Tag	RVU-6 FIN
Unit Model	FWE143
Compressor Qty & Model(s) [Refrigerant]	(3) ZR54K5E [R-407C]
Summer Ambient / Roof Effect, °F	92.0 / 15.0
Cond. Coil Size, in (H x L x R x FPI)	(1 @ 64) x 82 x 3R 16 (3/8" c/w 1" space)
Cond. Header Qty. & Size, in	(3) 7/8
Cond. Coil Circuiting / Ton/Circ (Ton)	15P - 12C - 12(subC + B) / 1.15
Cond. Fan Qty & Type or BHP, Eff.	(2) 26E c/w 1.0 HP
Cond. Tube PD, PSI / Comp HOC	6.4 / 1.26
Cond. Fx / Airflow, CFM, PD, in.wc.	0.75 / 14337, 0.16
DX Coil Size, in (H x L x R x FPI)	37.5 x 27 x 8R 8 (Alternate)
DX Coil Size, mm (H x L x R x FPI)	-
DX Coil Circuiting	16P - 15C - 0B
Header Qty. & Size, in	(3) 7/8
DX Tube PD, PSI / Velocity, FPM	1.6 / 1283.5
Distributors Qty. & Size	(3) 4-3-5
Distributors Pressure Drop, PSI	52.0
Distributors Nominal Load (%)	126
# of HGBP / Ton/Circ (Ton)	1 / 0.92
Design Ambient, °F DB	95.0
Net Capacity, MBH	166.3
Total / Sensible Capacity, MBH	166.3 / 78.6
Air Flow Conditions	Standard CFM
Total / DX Air Flow, CFM	3570 / 3570
Air EDBT, °F / EWBT, °F	71.6 / 66.6
DX LDBT / LWBT, °F	51.2 / 51.0
D/A LDBT / LWBT, °F	51.2 / 51.0
Water Removal, lb/h	79.4
Drain Pan, in / No. of Mid. Pan	6 / 0
Leaving Coil Velocity, AFPM	493
Coil Pressure Drop, in.wc.	0.93
SST / SCT, °F	44.2 / 114.7
S/A Motor Information	0 BHP @ 82% Draw Thru
R/A Motor Information	
EER/ IEER Under design condition	-
CSA C746-06 EER	11.00
AHRI 340/360-2007 EER / IEER	11.0 / 11.2
Notes	2,6

(Indicated as RVU-4 on TCE's Drawings)

Notes:
[2] The coil performance data is based on R-407C refrigerant.
[6] Mixed air application.

Submitted By: NSS Date: 1/2/2014

EngA ENGINEERED AIR

HEAT PIPE PERFORMANCE DATA
Version 1.2.9

JOB NAME: GRAFTON BETHEL ES PHASE III] **JOB NO:** DK6927(RV655)

CUSTOMER: YORK COUNTY SCHOOLS **ENGINEER:** THOMPSON CONSULTING ENGINEERS

LOCATION: Richmond, VA **ALTITUDE:** 0 ft (.0 m)

EngA MODEL: FWE143/DJX20/HRW1200/C/O **QTY:** 1 **TAG:** RVU-6

(Indicated as RVU-4 on TCE's Drawings)

Heat Pipe Selection Data - HVAC			
		Supply	Exhaust
Summer Design Without Evaporative Cooling	Fan Location	Heat Pipe Outlet	Heat Pipe Outlet
	Air Flow Through Pipe	3570 SCFM	3200 SCFM
	Standard Velocity Thr Pipe	437 fpm	422 fpm
	Entering Temp. DB/WB	51.2/51.0°F	78.0/65.0°F
	Leaving Temp. DB/WB(RH)	66.3/57.0°F(56%)	61.1/59.2°F(89%)
	Air Pressure Drop	0.50"wc	0.48"wc
	Energy Recovery	58.3 Mbh	
	Supply Recovery Factor	56.4%	
Winter Design	Fan Location	Heat Pipe Outlet	Heat Pipe Outlet
	Air Flow Through Pipe	3570 SCFM	3200 SCFM
	Standard Velocity Thr Pipe	437 fpm	422 fpm
	Entering Temp. DB/WB	38.8/36.4°F	68.0/54.0°F
	Leaving Temp. DB/WB(RH)	55.3/44.8°F(42%)	49.6/45.9°F(75%)
	Air Pressure Drop	0.49"wc	0.47"wc
	Energy Recovery	63.5 Mbh	
	Supply Recovery Factor	56.4%	
	Tilt Control Factor		3024
	Moisture Condensed Out		0.00 Lbs/Min
	Frost Point		8.2°F

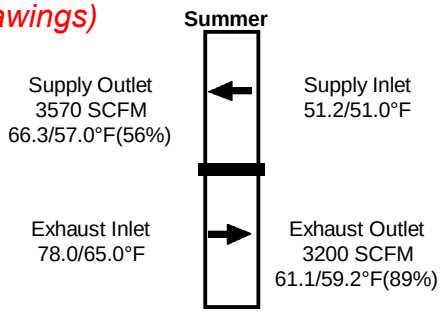

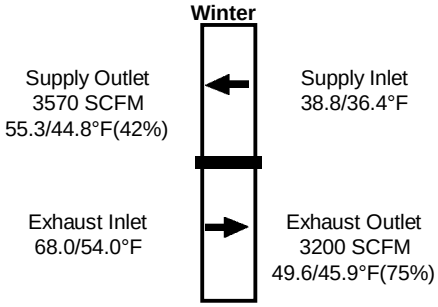

System: (1) Tru in an integrated tilt package
Type: Corrugate Aluminum fin, 5/8" O.D. aluminum tube

Unit ID	TRU Model	Face Height	Face Length	Row	Exh FPI	Sup FPI	Type	Exh Length	Sup Length	Weight (LBS)
1	**TRU-120**	**- 42**	**- 54**	**- 6**	**- 12E**	**- 12S**	**- AC5**	**- 26**	28	360

Unit(Dimensions are in inches)	Length	Width	Height
Integrated tilt package model: TP-120-3F-10	78	36	56
Integrated tilt package crated dimensions:	84	40	59

Unit	Weight in lbs
TRU unit weight	360
Integrated tilt package w/o Tru(s)	552
Total system weight	912
Crated system weight	1188

DATE: 16-Jan-2014 **SUBMITTED BY:** NSS

ENTHALPY WHEEL PERFORMANCE DATA

Version 1.1.4

JOB NAME: GRAFTON BETHEL ES PHASE III]
JOB NO: DK6927(RV655)
CUSTOMER: YORK COUNTY SCHOOLS
ENGINEER: THOMPSON CONSULTING ENGINEERS
LOCATION: Richmond, VA
ALTITUDE: 0 ft (.0 m)
EngA MODEL: FWE143/DJX20/HRW1200/C/O
QTY: 1
TAG: RVU-6

(Indicated as RVU-4 on TCE's Drawings)

Enthalpy Wheel Selection Data - Model AEW-1200 (Note 1)			
		Supply	Exhaust
Summer Design	Inlet Static Pressure	-0.8"Wc	-1.75"Wc
	Air Flow Through wheel	3570 Scfm Outlet	3200 Scfm Inlet
	Entering Temperature DB(RH)/WB	95.0/78.0°F	61.2/59.2°F
	Leaving Temperature DB/WB(RH)	71.6/66.6°F(77%)	87.3/73.7°F(52%)
	Air Pressure Drop	1.01"Wc	0.89"Wc
	Enthalpy Recovery	164.11 Mbh	
	Sensible Recovery	90.09 Mbh	
	Moisture Removal	63.05 Lb/Hr	
	S/A Sensible/Total Efficiency	69.1% / 65.4%	
	ASHRAE Sensible/Total Effectiveness	77.1% / 72.9%	
Winter Design (Note 2)	Inlet Static Pressure	-0.8"Wc	-1.75"Wc
	Air Flow Through wheel	3570 Scfm Outlet	3200 Scfm Inlet
	Entering Temperature DB(RH)/WB	15.0/12.0°F	49.6/45.9°F
	Leaving Temperature DB/WB(RH)	38.9/36.4°F(79%)	22.9/22.1°F(89%)
	Air Pressure Drop	0.90"Wc	0.82"Wc
	Enthalpy Recovery	147.29 Mbh	
	Sensible Recovery	92.22 Mbh	
	Moisture Addition	50.7 Lb/Hr	
	Frost Point	14.3°F	
	ASHRAE Sensible/Total Effectiveness	Note 3	

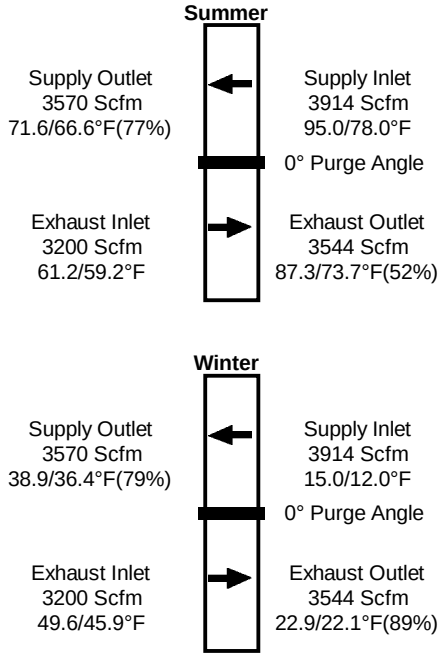

Notes:
1. Energy recovery component certified to the ARI Air-to-Air Energy Recovery Ventilation Equipment Certification Program in accordance with ARI Standard 1060-2001
2. Wheel performance in the winter design section includes the effects of frost control.
3. Without taking frost control into account, the ASHRAE Sensible/Total effectiveness is 77.1% / 74.9%. The supply leaving db/wb will be 38.9/36.4°F and the exhaust leaving db/wb will be 22.9/22.9°F.

DATE: 16-Jan-2014
SUBMITTED BY: NSS

Customer: GRAFTON BETHEL ES PHASE III	Fan Tag: RVU-6 SA
Job ID: DK6927	Model: 122 BAE-DW
CL I	*(Indicated as RVU-4 on TCE's Drawings)*

94

CFM:	3,570
SP:	4.9 in.wg
RPM:	3617
BHP:	4.18
Outlet Velocity:	2,303
Density:	0.075

TWIN CITY FAN AND BLOWER PERFORMANCE CURVE

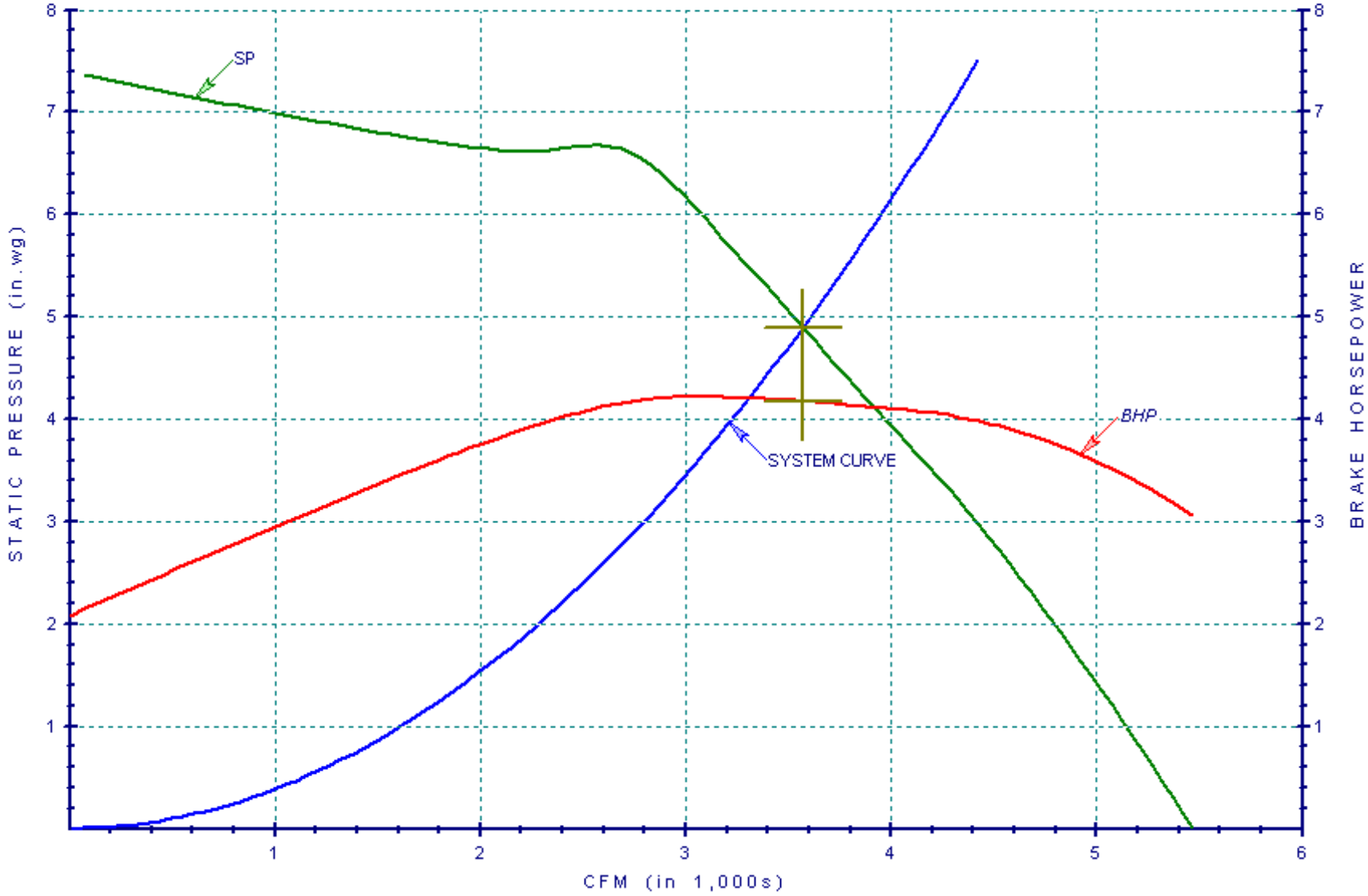

Sound Power Level Octave	In/Out
1	86 / 94
2	87 / 93
3	89 / 91
4	94 / 91
5	88 / 89
6	85 / 88
7	81 / 81
8	74 / 75

in db re 10^{-12} watts

1/2/2014

RVU-6 EA

(Indicated as RVU-4 on TCE's Drawings)

MODEL A10-10A

Selection Input	Input Flow	Input Pressure	Temperature	Attitude	Q Derate	P Derate	VAV Set Point		Date
	3512 CFM	3.70 in-wg	70 F	0 ft	0 CFM	0.00 in-wg	0.00 in-wg		01-02-2014

Selection Output	Flow	Pressure	Power	Static Efficiency	Total Efficiency	Speed	Outlet Velocity		
	3512 CFM	3.70 in-wg	3.81 hp	53.8 %	64.0 %	1890 rpm	3443 fpm		
	Impeller Diameter	Outlet Area	Max Speed	AMCA Class	Drive	Blades	P Volume	Turndown	
	10.0 in	1.02 ft²	1934 rpm	II	Belt Drive	48	2.7 ft³	100 %	

Performance

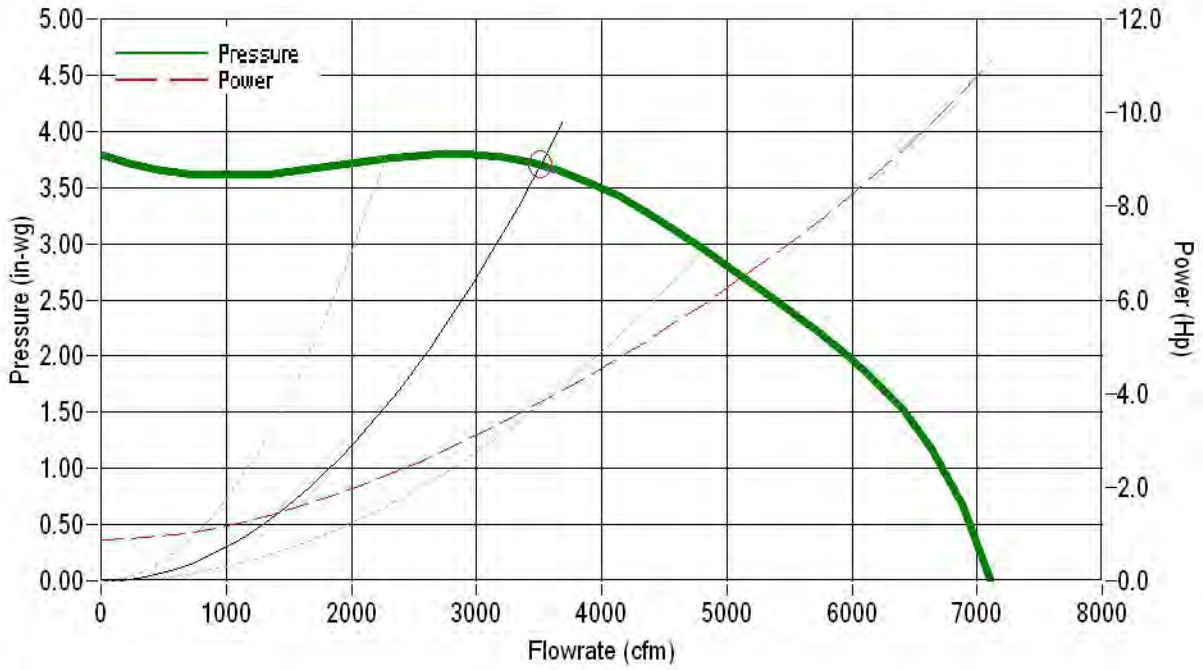

Sound (Lwi)	63	125	250	500	1000	2000	4000	8000	Lw	LwA
	91	90	87	84	84	84	81	78	96	91

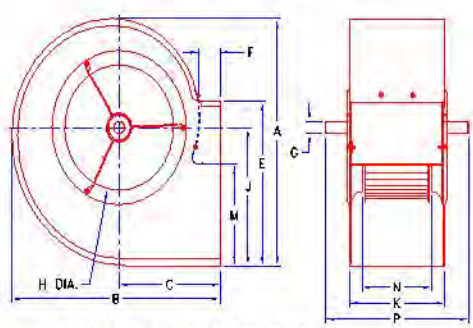

DIMENSIONS SHOWN ARE FOR REFERENCE ONLY.

A	B	C	E	F	G	H	J	K	M	N	P
17.38	16.19	7.94	11.38	1.50	0.75	8.81	9.69	13.12	7.00	11.06	16.50

Dimensions in inches

Notes: Airflow performance data are obtained in accordance with AMCA 210-07. Installed performance will vary depending on extent of cabinet geometry

Sound data are estimated from industry experience for the type of product selected. Data should be used for comparison purposes only and do not represent installed values.

Options

Available Bore: 3/4, 1 and 1-3/16 inch
Center disc lock style: Preslok
Three Piece bearing bracket (Max 3HP) available for 9 - 15" blowers
One piece bearing bracket (Max 10HP) available for 12 - 18" blowers
Standard motor mounting bracket (3/4HP Max) or Reinforced motor mounting bracket (1 1/2Hp Max)

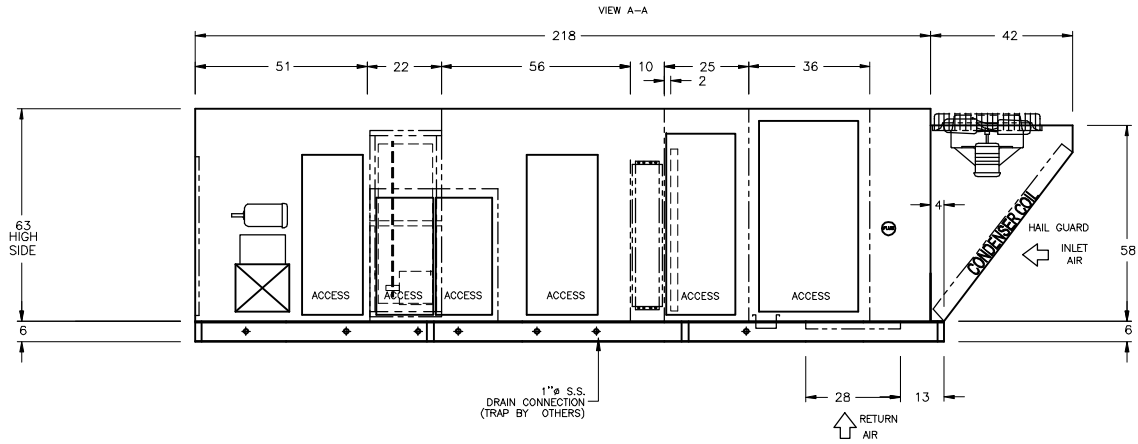

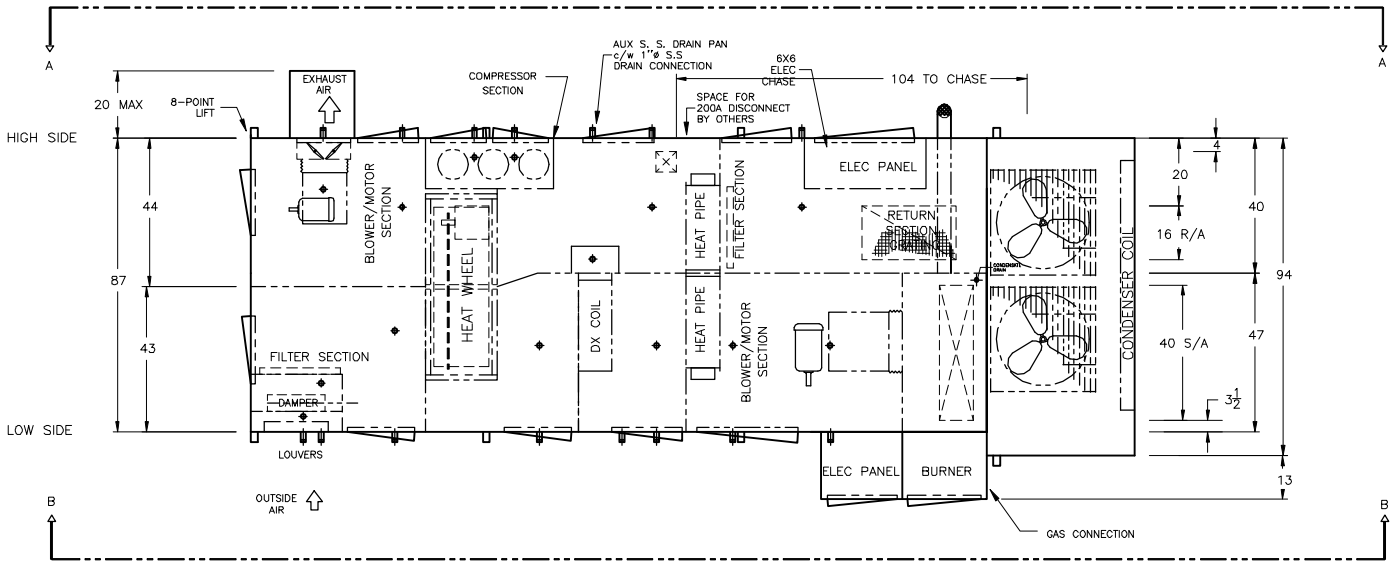

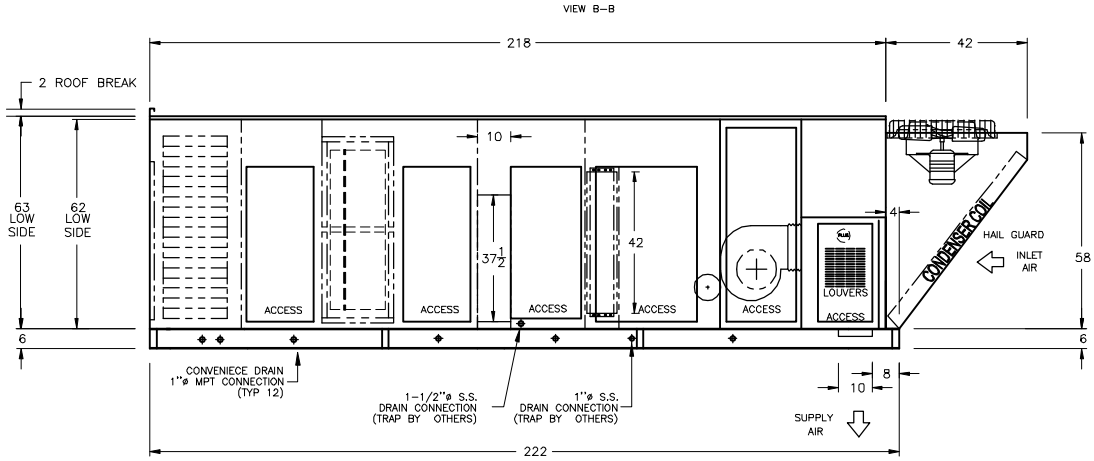

DOOR SIZES AND INTERNAL COMPONENTS ARE APPROX. VALUES. DIMENSIONS SHOWN IN INCHES ONLY UNLESS OTHERWISE NOTED.

DK6927 (RV655)

TAG: RVU-6 *(Indicated as RVU-4 on TCE's Drawings)*

FWE143/DJX20/HRW1200/HRP/C/O/MV

HEAT/COOL UNIT

EngA® ENGINEERED AIR®

REVISIONS:			
DATE: JAN 2 2014	DRWN BY: NSS	CHKD BY:	DRWG NO.: 06927M-06-1

U:\CAD\DRAWINGS\HRW\DK6382

ProUnit™

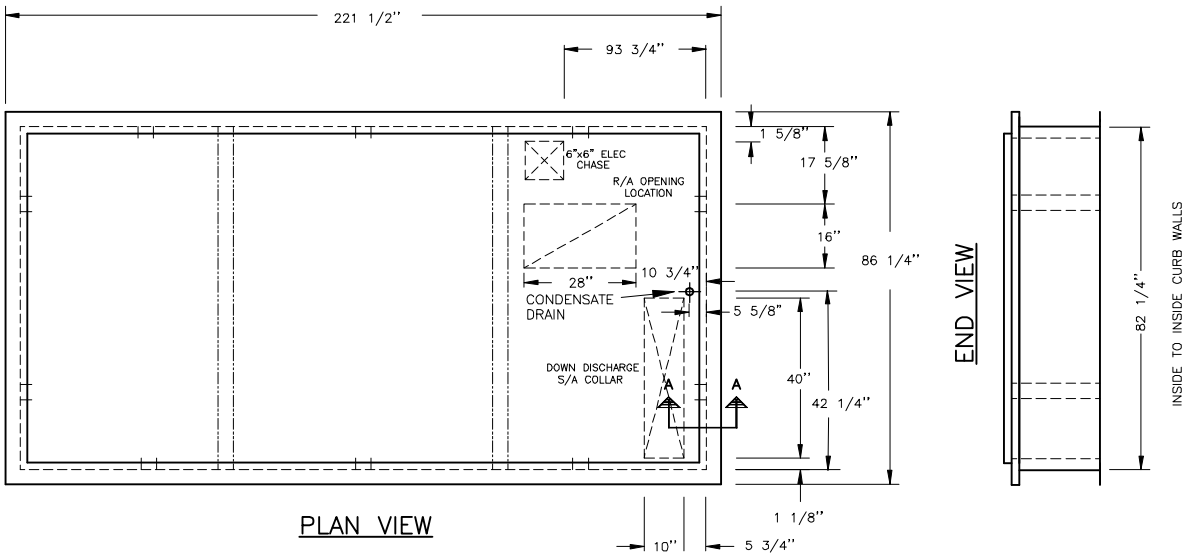

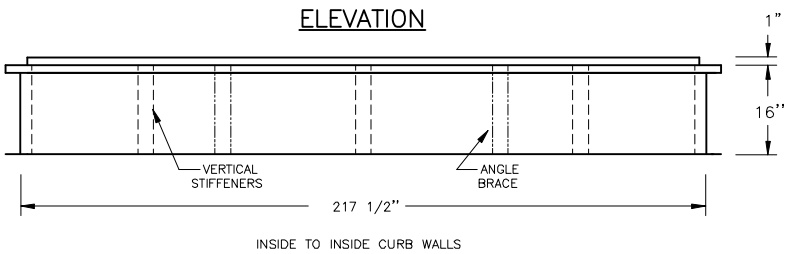

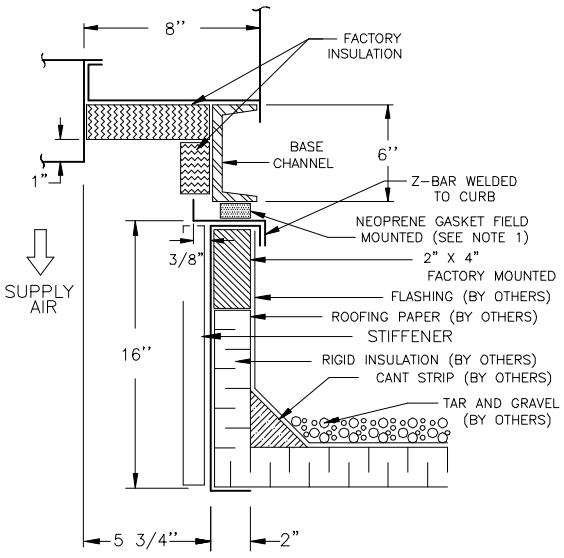

NOTES:

1. 3/8" X 3/4" NEOPRENE GASKET FOR 2" TO 4" CHANNELS, OR 3/8" X 1-1/2" NEOPRENE GASKET FOR CHANNELS 6" AND OVER.
2. CURB MAY BE BROKEN DOWN FOR SHIPPING. IN THESE CASES, FIELD ASSEMBLY WILL BE REQUIRED BY INSTALLING CONTRACTOR.
3. CONTINUOUS BASE SUPPORT TO CURB PANELS, INCLUDING THE CENTER SUPPORT PANEL IF SUPPLIED, IS REQUIRED BY OTHERS.
4. DIMENSIONS GIVEN IN INCHES ONLY

AutoCurb™ Phase II version 2.2.10

U:\CAD\DRAWINGS\FW_DJ

JOB# DK6927 DRAWING NOT TO SCALE FWE143/DJX20/HRW1200/HRP/O/C/MV

TAG: RVU-6 *(Indicated as RVU-4 on TCE's Drawings)* 16" HIGH CURB FOR DOWN DISCHARGE UNITS

EngA® ENGINEERED AIR®

REVISIONS:			
DATE:	DRWN BY:	CHKD BY:	DRWG NO.:
JAN 02 2014	NSS		06927C-06-1

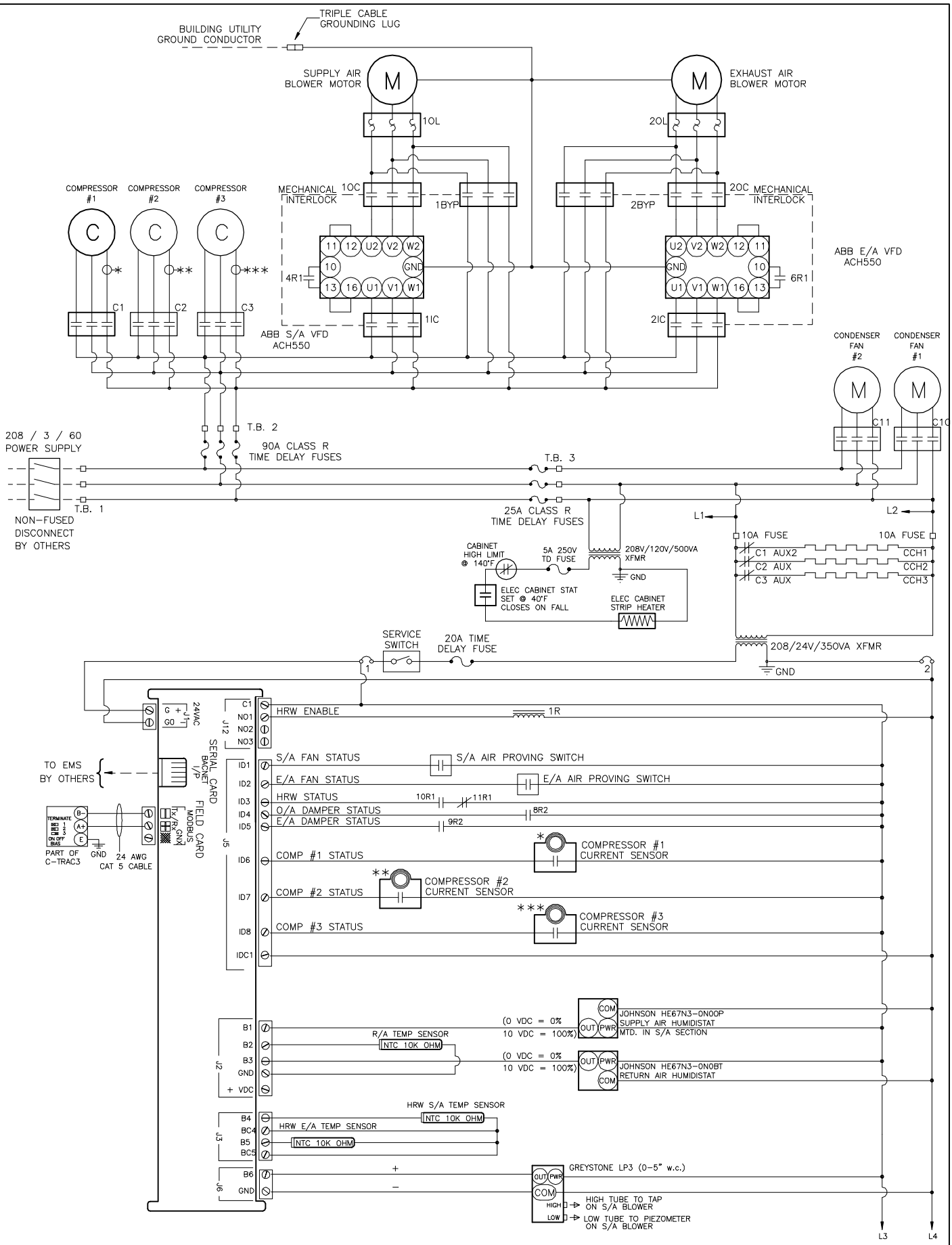

DENOTES FIELD WIRING. REPLACEMENT WIRE MUST BE EQUIVALENT TO ORIGINAL WIRE SUPPLIED.

TAG: RVU-5,-6 *(Indicated as RVU-3, -4, respectively on TCE's Drawings)*

PAGE 1 OF 3

INTERNAL WIRING
FW_DJ SERIES

EngA®

ENGINEERED AIR®

REVISIONS:			
DATE:	DRN.BY:	CHKD.BY:	DRWG.NO.:
JAN 3 2014	NSS		06927E-05-1

DK6927 (RV655) U:\CAD\DRAWINGS\FW_DJ

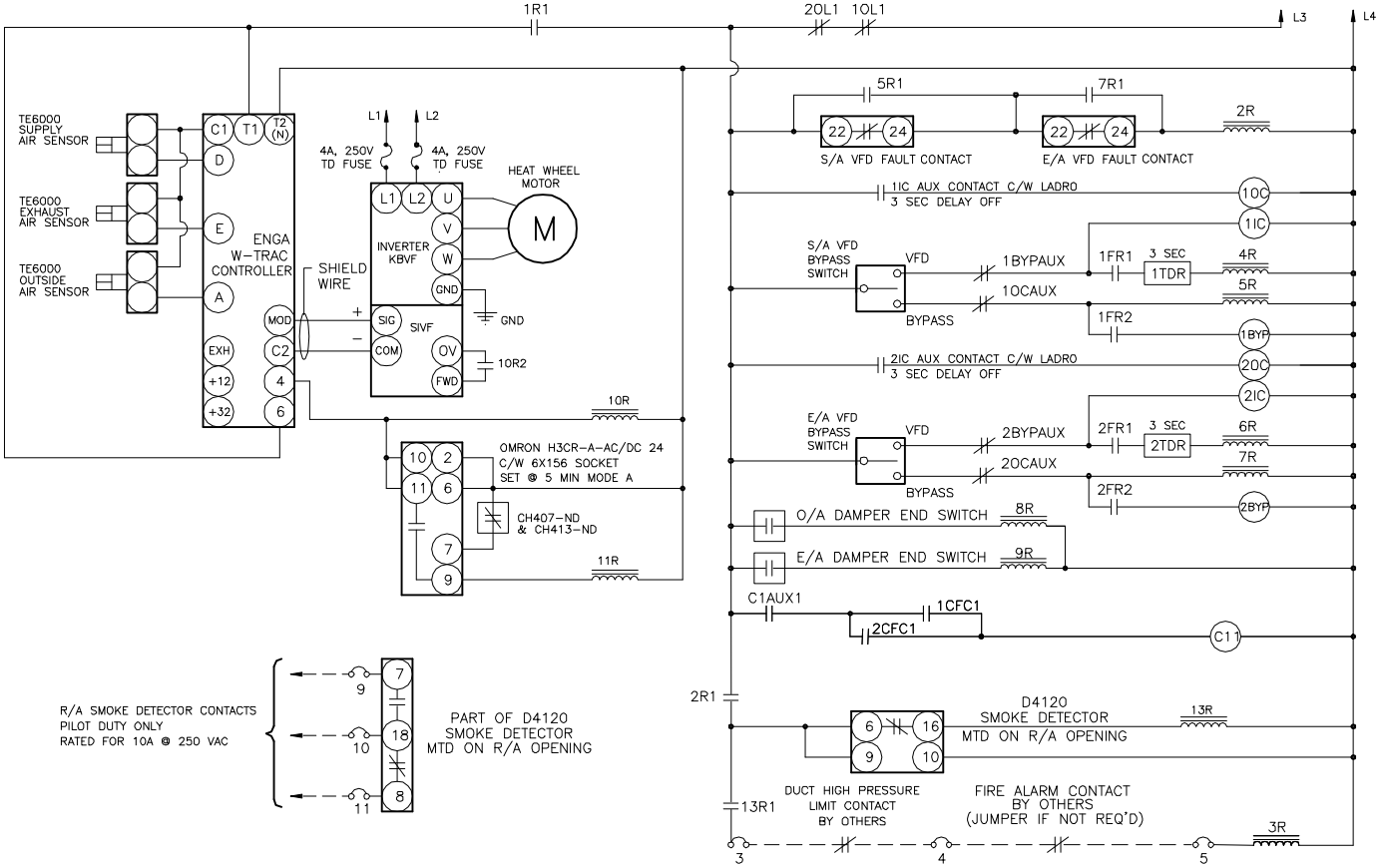

- - - - - - - - DENOTES FIELD WIRING. REPLACEMENT WIRE MUST BE EQUIVALENT TO ORIGINAL WIRE SUPPLIED.

TAG: RVU-5,-6 *(Indicated as RVU-3, -4, respectively on TCE's Drawings)*

PAGE 2 OF 3

INTERNAL WIRING
FW_DJ SERIES

EngA®

ENGINEERED AIR®

REVISIONS:			
DATE:	DRN.BY:	CHKD.BY:	DRWG.NO.:
JAN 3 2014	NSS		06927E-05-2

DK6927 (RV655) U:\CAD\DRAWINGS\FW_DJ

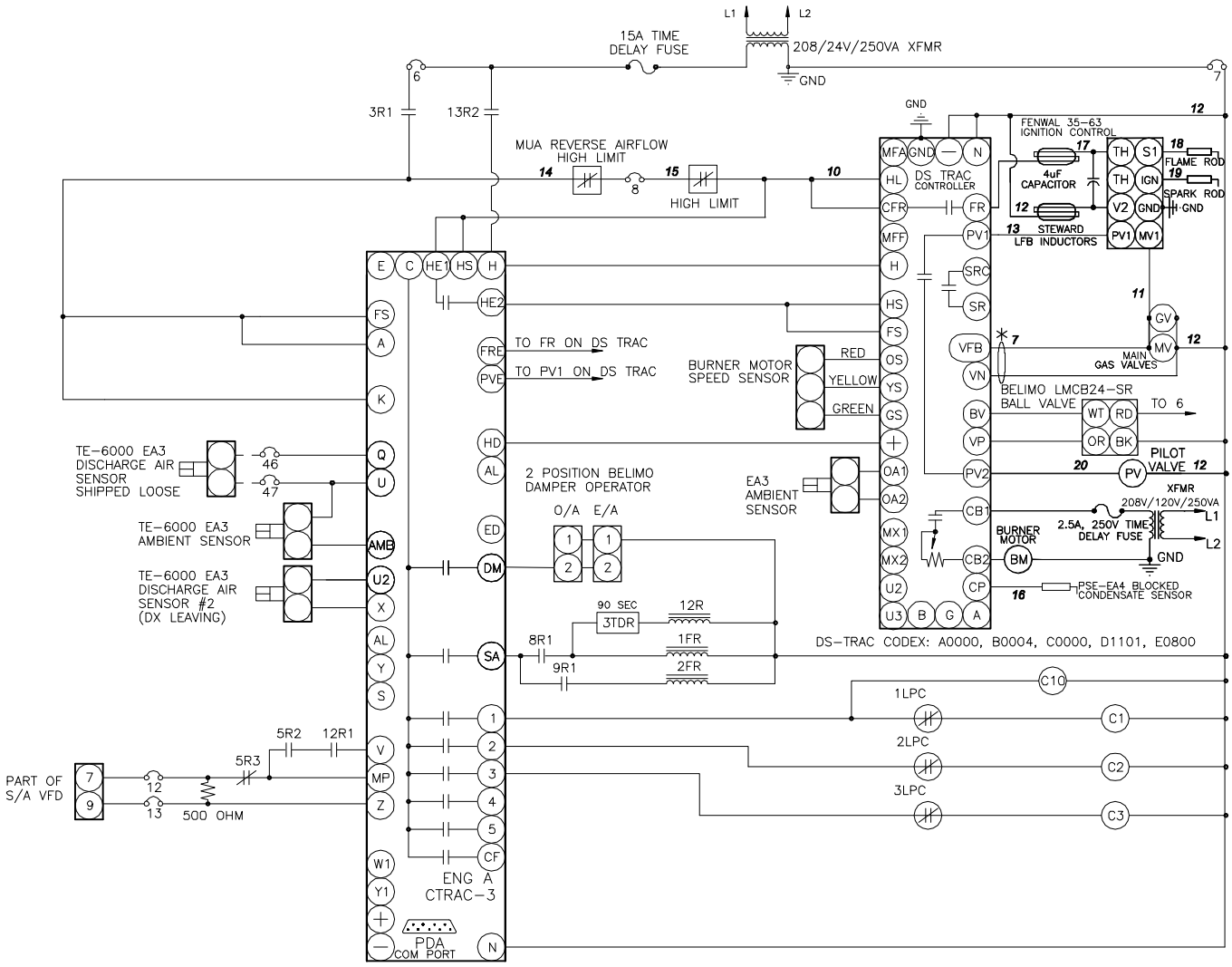

(Indicated as RVU-3, -4, respectively on TCE's Drawings)

* RED FEEDBACK CABLE HOOKED DIRECTLY TO MAIN GAS VALVE.

DENOTES FIELD WIRING. REPLACEMENT WIRE MUST BE EQUIVALENT TO ORIGINAL WIRE SUPPLIED.

TAG: RVU-5,-6

PROGRAM #21

PAGE 3 OF 3

INTERNAL WIRING
FW_DJ SERIES

EngA®

ENGINEERED AIR®

REVISIONS:			
DATE:	DRN.BY:	CHKD.BY:	DRWG.NO.:
JAN 3 2014	NSS		06927E-05-3

DK6927 (RV655) U:\CAD\DRAWINGS\FW_DJ

EngA ENGINEERED AIR

ELECTRICAL DATA

JOB NAME: GRAFTON BETHEL ES PHASE III] **JOB NO:** DK6927(RV655)

EngA MODEL: FWE143/DJX20/HRW1200/HRP/C/O/MV **QTY:** 1 **TAG:** RVU-6

(Indicated as RVU-4 on TCE's Drawings)

Power Supply	Minimum Circuit Ampacity	Terminal Block to Accept	Maximum Fuse (Dual Element)	Maximum Breaker	Minimum Unfused Conductor
208 / 3 / 60	102.9 AMPS	2 Awg	110 AMPS	110 AMPS	8 Awg

Components	Circuit No	Model	Minimum Conductor Size	Ampacity FLA / LRA	SubFuse Group	Subfuse Group Fuse Size	Terminal Block to Subfuse
Supply Fan Motor	1	Super 'E' ODP (3450) 5 HP	8 Awg	12.8	1	90	4 Awg
Exhaust Fan Motor	1	Super 'E' ODP (1750) 5 HP	8 Awg	15.3			
Compressors #1 to #3	1	ZR54K5E-TF5-130	8 Awg	15.4 / 114.0			
Burner Motor(Xfmr)	1	PSC(Use Xfmr) 1/12 HP	14(14) Awg	1.32 @ 120/1/60	2	25	14 Awg
Condenser Fan Motors #1 and #2	1	OPAO 1 HP	14 Awg	3.9			
Crankcase Heaters (3 total)	1		14 Awg	.2			
Main Control Xfmr	1		14 Awg	1.7			
Control Xfmr #1	1		14 Awg	1.2			
Control Xfmr #2	1		14 Awg	4.8			
Heater Xfmr	1		14 Awg	2.4			

UNIT CONTROL PANEL(S) SHORT CIRCUIT CURRENT RATING (SCCR)
Short circuit current 5 kA rms symmetrical, 208 V maximum

WIRING DRAWING LEGEND					
AFS	Auto Fan Switch	DM	Damper Motor	LAR	Low Ambient Relay
C	Contactor	FR	Fan Relay	NFD	Non Fused Disconnect
CCH	Compressor Crankcase Heater	GV1	Low Stage Gas Valve	OL	Thermal Overload
CFC	Condenser Fan Control	GV2	High Stage Gas Valve	OP	Oil Failure Switch
CLC	Compressor Loading Control	HR	Heating Relay	PV	Pilot Gas Valve
CPM	Compressor Protection Module	HLPC	High/Low Pressure Control	R	Relay or Contactor
CP	Internal Compressor Protection	HL	High Limit Control	SS	Sail Switch
CR	Cooling Relay	IGN	Ignition Control	TB	Terminal Block
CUC	Cylinder Unloading Control	LAC	Low Ambient Control	TDR	Time Delay Relay
CUS	Cylinder Unloading Solenoid	LPC	Low Pressure Control	TC	Time Clock

(Continued on second page)

DATE: 17-JAN-2014 **SUBMITTED BY:** STEVE JONES / NSS

EngA ENGINEERED AIR

ELECTRICAL DATA

JOB NAME: GRAFTON BETHEL ES PHASE III] **JOB NO:** DK6927(RV655)

EngA MODEL: FWE143/DJX20/HRW1200/HRP/C/O/MV **QTY:** 1 **TAG:** RVU-6

(Indicated as RVU-4 on TCE's Drawings)

UNIT FUNCTION

CTRAC-3 Program #21
EMS HAS FULL CONTROL OF CTRAC-3

Non fused disconnect switch (by others) 'on', service switch 'on', VFD fault contacts 'closed', smoke detector contact (supplied by others, installed by EngA) 'closed', fire alarm contacts (by others) 'closed' (jumper if not required). EMS enable unit 'ON' (BV42). Outside air and exhaust air dampers 'open'. Damper end switches 'closed', the blowers are enabled and run continuously c/w supply and exhaust VFD's for air balancing only.

EMS HRW enable 'on' (BV001), the WTRAC with an adjustable integral set point set at 55°F will modulate the wheel rotation speed to maintain the heat wheel supply air leaving temperature. The heat/cool/vent changeover will automatically switch between heating, cooling, and venting modes as required. WTRAC reduces wheel rotation speed in frost control mode to prevent frost formation.

The C-TRAC3 controller, with an adjustable discharge air setpoint from EMS (AV25), will modulate the heating or cooling (and cycle 3 stages of compressors) to maintain the required discharge air temperature from 50°F to 90°F.

EMS cool mode enabled
If there is a call for cooling (BV47), the C-TRAC3 will begin staging on the mechanical cooling. The DX coil leaving temperature control band is from 50°F to 90°F, controlled via EMS cooling setpoint signal (AV25). Mechanical cooling is locked out below 50°F ambient temperature

EMS heat mode enabled
If the C-TRAC3 is in heating mode (BV48) and there is a call for heating, the C-TRAC3 will close the HE contacts and output a 0 - 10 vdc modulating heating signal directly to the DS-TRAC heating controller to operate all aspects of burner operation. The discharge temperature will be controlled via EMS D/A setpoint signal (AV25), and the discharge air temperature control band is from 50°F to 90°F. Gas heating is disabled above 120°F ambient temperature.

EMS dehumidification mode enabled
When in dehumidification mode (BV43), the C-TRAC3 will enable the cooling to maintain the desired leaving DX coil temperature set by EMS signal (AV27) to achieve the required room relative humidity. The heating is also enabled for reheat to satisfy the required discharge air temperature (AV25).

EMS enable unit 'OFF' (BV42), C-TRAC3 begins shutdown cycle, dampers close, blowers delay off and shut down. If the fire alarm contacts 'open' -or- smoke detector contact (supplied by others, installed by EngA) 'open' -or- duct high pressure limit contact 'open', equipment operation is disabled immediately. If the discharge air temperature falls below 40°F, the C-TRAC3 will shut down fans, close dampers and indicate alarm.

Refer to the C-TRAC3 face mounted LED's for mode indication and status.
Note 1. Compressor(s) cycle has minimum run time, minimum off time and interstage timing.
Note 2. Refer to manuals shipped with unit for more detailed explanation of maintenance, components and controls.
Note 3. Go to www.engineeredair.com/manuals/manuals.asp for online manual details.
Note 4. VFD's have external manual bypass and will go to 60hz.

BACNET control and status variable points list: (See C-TRAC3 BACnet IO&M for additional points)

DATE: 17-JAN-2014 **SUBMITTED BY:** STEVE JONES / NSS

EngA ENGINEERED AIR

JOB NUMBER: DK6927 (RV655)

TAG: RVU-6

Network Control Variable List - C-TRAC3 BACnet

(Indicated as RVU-4 on TCE's Drawings)

Variable	Description	Note
BV36	Air Flow Problem	R
BV26	Ambient Sensor Alarm	R
AV11	Ambient Temperature	R
BV10	Blower Status	R
BV13	Cooling Lockout - Low Ambient Temperature	R
BV5	Cooling Mode - A	R
AV18	Cooling Modulated Output	R
AV17	Cooling Stages % On	R
BV50	Cooling Status - Mechanical Cooling On/Off	R
AV19	Damper % Open	R
BV16	Damper Contact DM closed	R
AV7	Damper Minimum Position	R
BV11	Damper Override Low Discharge Temperature	R
BV19	Discharge Air Low Limit Lockout	R
BV24	Discharge Air Sensor Alarm	R
AV12	Discharge Air Temperature	R
AV14	Discharge Air Temperature Setpoint	R
BV22	DJ or DG Flame Failure Alarm	R
BV21	DJ or DG Prepurge Alarm	R
BV17	Economizer At Minimum Due to High Ambient	R
BV15	Economizer Mode	R
BV6	Economizer Mode - E	R
BV47	EMS Cooling Enabled	R/W
AV1045	EMS Damper Minimum Position Setpoint	R/W
BV43	EMS Dehumidification Enabled	R/W
AV25	EMS Discharge Air Setpoint	W
AV26	EMS Discharge Air Setpoint	R
BV45	EMS Economizer Enabled	R/W
BV48	EMS Heating Enabled	R/W
AV27	EMS Secondary Discharge Air Setpoint	W
AV28	EMS Secondary Discharge Air Setpoint	R
BV42	EMS Unit Command On/Off	R/W
BV14	External Cooling Lockout - A	R
BV41	Heat Fail Lockout	R
BV20	Heat Failure Lockout	R
BV40	Heating Lockout High Ambient Temperature	R
BV7	Heating Mode - HS	R
AV20	Heating Modulating % Output	R
BV39	Heating Status	R
BV23	LMK or HE Failure Alarm	R
BV4	Occupied Mode - FS	R
BV25	Secondary Discharge Air Sensor Alarm	R
AV13	Secondary Discharge Air Temperature	R
BV35	Sensor Failure Alarm	R

DATE: 1/16/2014

SUBMITTED BY: NSS

EngA® ENGINEERED AIR®

JOB NUMBER: DK6927 (RV655)

Network Control Variable List - C-TRAC3 BACnet

(Indicated as RVU-4 on TCE's Drawings)

TAG: RVU-6

Variable	Description	
AV1044	Unit On/Off Status	R
BV8	Unoccupied Mode - K	R
Bv18	VFD Cooling Lockout - Limit Stages due to Low Air Volume	R
AV10	VFD Speed Feedback	R
BV49	Write to Flash	R/W
ADDITIONAL POINTS	----------	
AV001	Supply Air Humidity	R
AV002	Return Air Temperature	R
AV003	Return Air Humidity	R
AV004	Heat Wheel Supply Temp	R
AV005	Heat Wheel Exhaust Temp	R
AV006	Supply Air CFM	R
BV003	Supply Air Fan Status	R
BV058	Exhaust Air Fan Status	R
BV059	Heat Wheel Status	R
BV060	Outside Air Damper Status	R
BV061	Exhaust Air Damper Status	R
BV062	Compressor 1 Status	R
BV063	Compressor 2 Status	R
BV064	Compressor 3 Status	R
BV001	Heat Wheel Enable	R/W

DATE: 1/16/2014

SUBMITTED BY: NSS

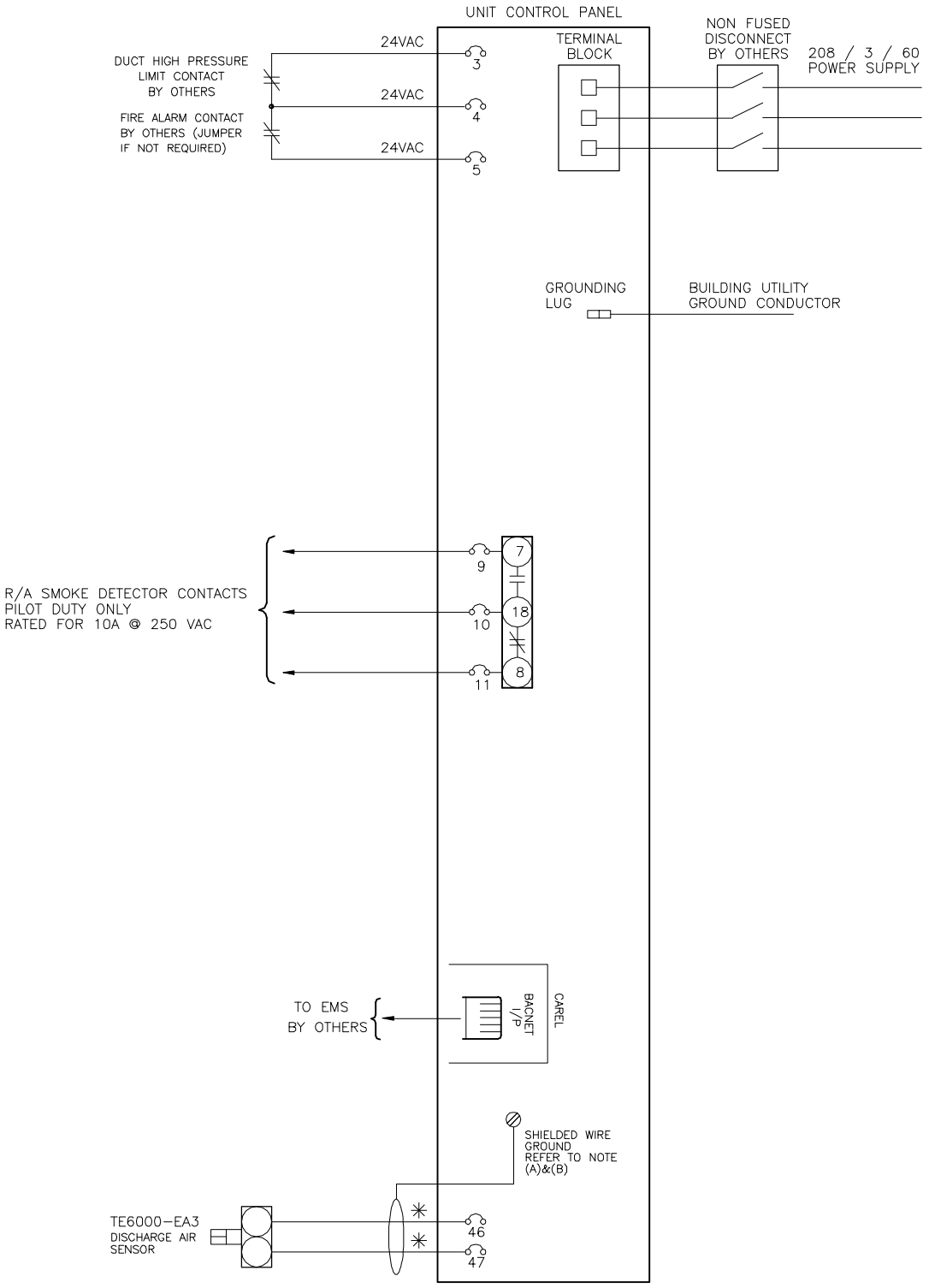

MAXIMUM CONTROL CIRCUIT AMPACITY 14.6 AMPS AT 24 VAC

✳✳ SHIELDED WIRE IS REQUIRED WITH BMS ANALOG SIGNALS.
TAPE OTHER END OF GROUND WIRE & SHIELD ENDS OF ANY UNUSED WIRES.

✳ SHIELDED WIRE IS REQUIRED WITH ELECTRONIC COMPONENTS.

(A) SHIELDED WIRE TO BE GROUNDED AT MAIN ENG A CONTROL CABINET END ONLY.
TAPE OTHER END OF GROUND WIRE & SHIELD ENDS OF ANY UNUSED WIRES.

(B) ENGINEERED AIR STRONGLY RECOMMENDS THAT THE SHIPPED LOOSE DISCHARGE AIR SENSOR BE MOUNTED 5–10 FT. DOWN STREAM OF HEAT EXCHANGER DISCHARGE OPENING TO AVOID TEMPERATURE SWING CAUSED BY RADIANT HEAT.

1. FIELD WIRING VOLTAGE DROP NOT TO EXCEED 10%.
2. ALL WIRING SHOWN SHALL BE COMPLETED BY INSTALLER.
3. ALL WIRING TO COMPLY WITH THE NATIONAL ELECTRICAL CODE.

FIELD WIRING DIAGRAM

TAG: RVU–5,–6 *(Indicated as RVU-3, -4, respectively on TCE's Drawings)*

FW_DJSERIES

EngA®

ENGINEERED AIR®

REVISIONS:			
DATE:	DRN.BY:	CHKD.BY:	DRWG.NO.:
JAN 8 2014	NSS		06927F–05–1

DK6927 (RV655) U:CAD\DRAWINGS\FW_DJ

GENERAL DEMOLITION NOTES

1. DEMOLITION NOTES DIRECTED TO AN "X" ACROSS AN AREA INDICATES THE NOTE APPLIES TO THE AREA DESCRIBED BY THE "X"
2. IN GENERAL, ITEMS SHOWN DASHED ARE TO BE REMOVED COORDINATE W/ DEMOLITION PLAN LEGEND AND NOTES
3. PROTECT ALL MATERIALS, FURNISHINGS AND EQUIPMENT, TO REMAIN, THROUGHOUT THE CONSTRUCTION PROCESS. DAMAGE TO THESE ITEMS IS THE RESPONSIBILITY OF THE CONTRACTOR. REPAIRS OR REPLACEMENTS SHALL BE DONE BY THE CONTRACTOR AT NO EXPENSE TO THE OWNER.

ROOF DEMOLITION LEGEND

- REMOVE VTR FLASHING
- REMOVE ROOF DRAIN
- REMOVE ROOF HATCH
- REMOVE RELIEF HOOD
- REMOVE EXHAUST FAN
- REMOVE PITCH POCKET
- REMOVE GRAVITY VENT
- REMOVE ABANDONED CURB OR HVAC UNIT, SEE RTE SCHEDULE & DETAIL B2/A1.05
- XXX ROOF TOP EQUIPMENT TAG
- PHOTO REFERENCE
- REMOVE BOILER FLUE

ROOF DEMOLITION NOTES X

1. REMOVE ROOF MEMBRANE & INSULATION SYSTEM DOWN TO GYP & METAL DECK TO REMAIN
2. REMOVE LEADER HEADS, GUTTER & DOWNSPOUT COMPLETE.
3. REMOVE METAL REVERSE COPING COMPLETE.
4. REMOVE AND SALVAGE METAL SIDING ON INSIDE FACE OF PARAPET.
5. REMOVE, SALVAGE & REINSTALL SPLIT JACK FLASHING AROUND PLATFORM SUPPORT POSTS.
6. REMOVE 2 PLY MOD BIT ROOF SYSTEM TO RETROFIT AND PROVIDE NEW ROOF DRAINS.
7. REMOVE, SALVAGE & REINSTALL METAL SOFFIT FOR RAIN LEADER INSTALLATION.
8. REMOVE ROOF LADDER AND SUPPORTS COMPLETE.
9. REMOVE STANDING SEAM METAL ROOF AS INDICATED.
10. REMOVE ONLY CONTINUOUS METAL COPING.
11. REMOVE CONTINUOUS METAL COPING & WOOD BLOCKING
12. REMOVE MASONRY PARAPET WALL COMPLETE.
13. REMOVE ROOF MEMBRANE, INSULATION SYSTEM DOWN TO ACOUSTICAL METAL DECK TO REMAIN.
14. REMOVE PARTIAL WALL FOR PIPE PASSAGE.
15. REMOVE PARTIAL MASONRY WALL FOR NEW RAIN LEADER.
16. REMOVE FOAM BOARD INSULATION, METAL ZEE FURRING AND METAL SIDING AS INDICATED.
17. REMOVE ROOF MEMBRANE, INSULATION SYSTEM DOWN TO METAL DECK TO REMAIN.
18. REMOVE & SALVAGE DOWNSPOUT FOR FMP INSTALLATION
19. REMOVE, SALVAGE & STORE FOR REINSTALLATION EXISTING METAL SOFFIT BELOW TO ACCESS INTERSTITIAL SPACE AS NEEDED TO REMOVE EXISTING DUCTWORK
20. REMOVE EXISTING ROOFTOP MTD REFRIGERATION EQUIPMENT, REFRIGERANT LINES & POWER LINES COMPLETE
21. PREPARE ROOF STRUCTURE THIS AREA TO RECEIVE NEW ROOFTOP HVAC UNIT, REFER TO MECHANICAL & STRUCTURAL DRAWINGS

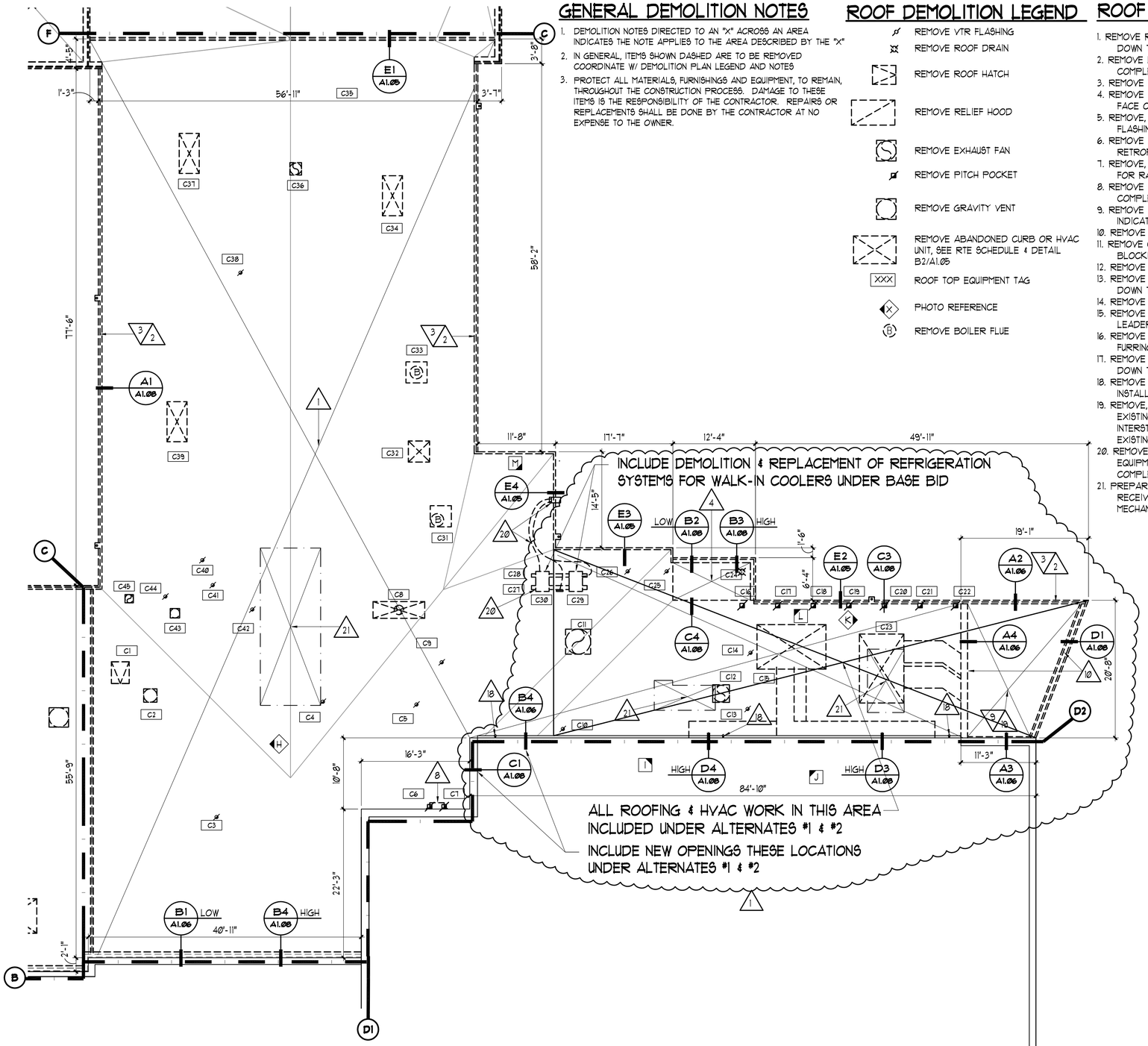

DEMOLITION ROOF PLAN AREA "C" & "D2"
SCALE: 1/8" = 1'-0"

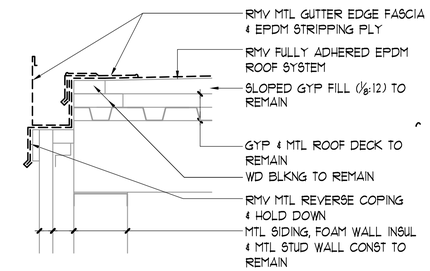

E4 DETAIL
SCALE: 1 1/2"=1'-0"

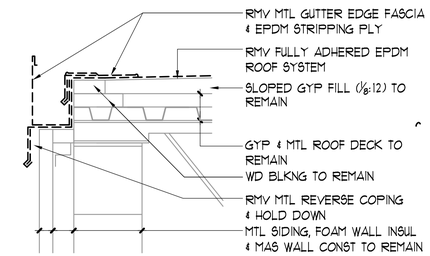

E3 DETAIL
SCALE: 1 1/2"=1'-0"

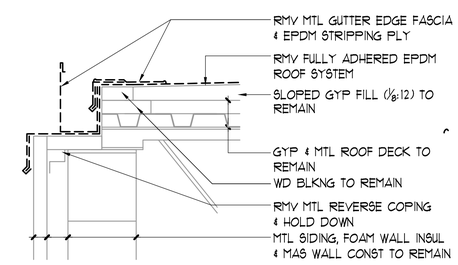

E2 DETAIL
SCALE: 1 1/2"=1'-0"

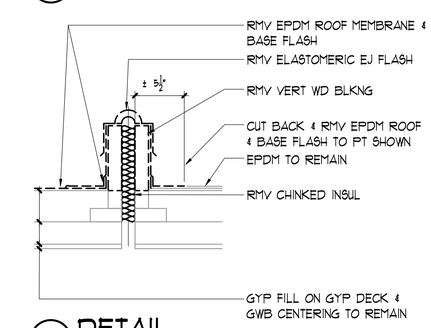

E1 DETAIL
SCALE: 1 1/2"=1'-0"

HUDSON + ASSOCIATES
ARCHITECTS
120 WEST QUEENS WAY SUITE 201 HAMPTON, VA.
(757) 722-1964 23669

1 REV 4/9/14

GRAFTON BETHEL ELEMENTARY PHASE III PARTIAL ROOF & HVAC REPLACEMENT

410 LAKESIDE DRIVE
YORKTOWN, VIRGINIA 23692-3026

STATE PROJECT NO.
098-14-00-103

COMMONWEALTH OF VIRGINIA
RICHARD S. CORNER
Lic. No. 007014
2-14-2014
ARCHITECT

FEBRUARY 14, 2014

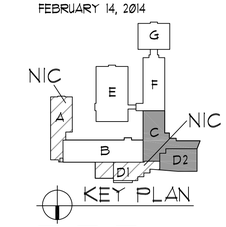

KEY PLAN

DEMO ROOF PLAN AREA "C" & "D2" & DEMO DETAILS

JOB NUMBER 1321

A1.05

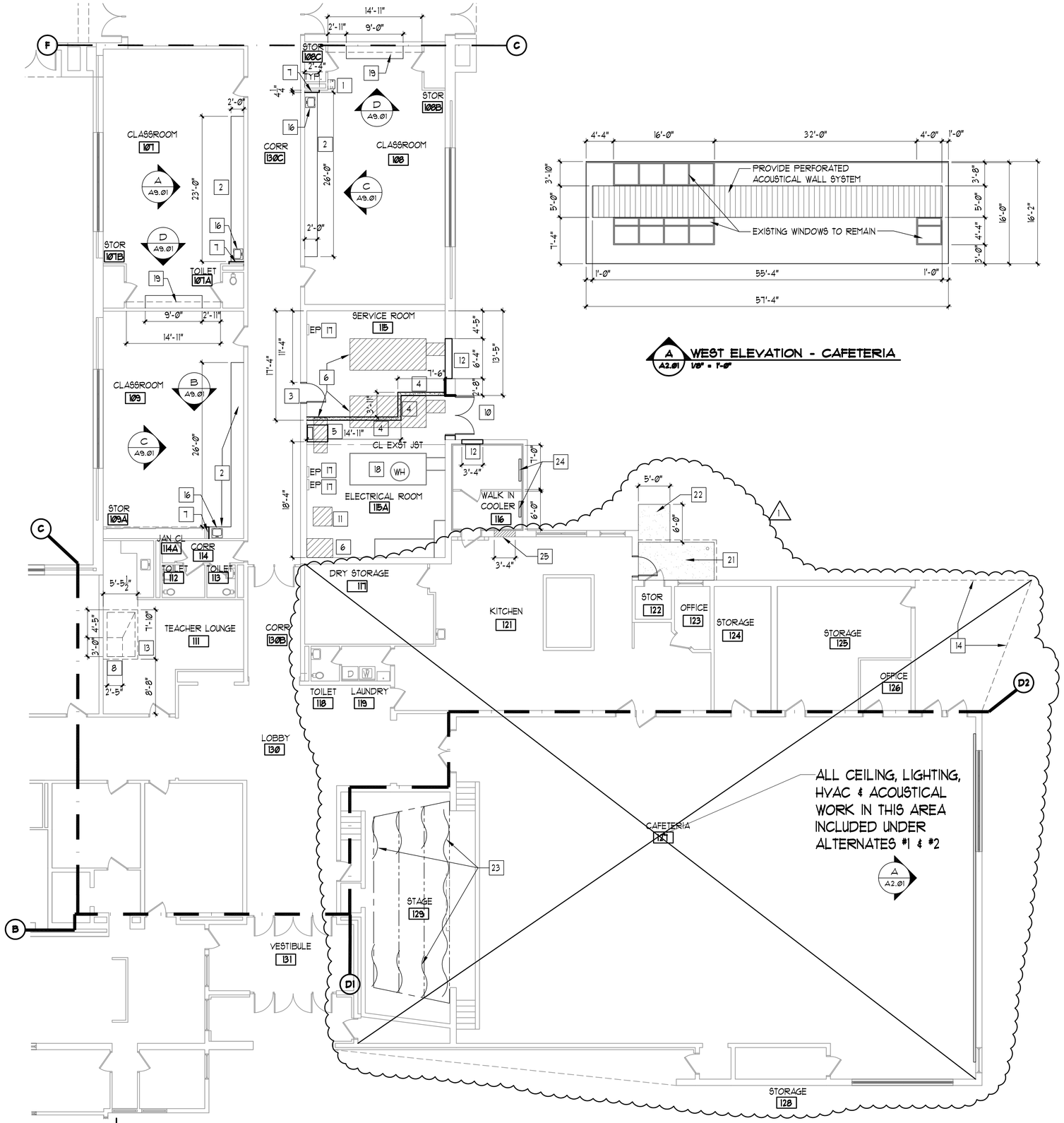

FLOOR PLAN AREAS "C" & "D2"

SCALE: 1/8" = 1'-0"

A2.01 WEST ELEVATION - CAFETERIA

1/8" = 1'-0"

GENERAL NOTES:

1. CONTRACTOR SHALL VERIFY EXISTING CONDITIONS PRIOR TO START WORK. ANY DISCREPANCIES IN THE DRAWINGS SHALL BE BROUGHT TO THE ATTENTION OF THE ARCHITECT PRIOR TO PROCEEDING WITH PORTION OF THE WORK IN QUESTION.
2. DO NOT SCALE DRAWINGS. ALL CONSTRUCTION MUST BE BASED ON DRAWINGS DIMENSIONS. FIELD VERIFY DIMENSION INDICATED.
3. DIMENSIONS ARE FROM FACE OF CMU OR STUD, UNLESS OTHERWISE NOTED.
4. REFER TO MECHANICAL AND ELECTRICAL DRAWINGS FOR COORDINATION ON RESPECTIVE EQUIPMENT, FIXTURE OR SYSTEM.
5. SEAL ALL MECHANICAL, ELECTRICAL AND PLUMBING THRU WALL PENETRATIONS WITH FIRE & SMOKE STOPPING SEALANT. ALL FIRE RATED PARTITIONS SHALL HAVE FIRE-RATED SEALANT TO MATCH RATING OF PARTITION.
6. CONTRACTOR SHALL COORDINATE STRUCTURAL JOIST & JOIST BRIDGING LOCATION WITH THE DUCTWORK LAYOUT TO AVOID CONFLICTS. HOWEVER IF DUCTWORK SHALL PASS BY AN EXISTING JOIST BRIDGING CONTRACTOR SHALL REMOVE BRIDGING & INSTALL A METAL PLATE AT TOP & BOTTOM OF JOIST.
7. REFER TO DRAWING A3.01 FOR FINISH SCHEDULE.
8. REFER TO DRAWING A3.02 FOR ROOFTOP EQUIPMENT SCHEDULE.
9. FIRE ALARM, SMOKE DETECTOR, WIRELESS ROUTE ARE SHOWN IN REFLECTED CEILING PLAN FOR REFERENCE PURPOSES ONLY. A DIFFERENT SCHOOL CONTRACTOR WILL REMOVE AND REINSTALL THOSE ITEMS.
10. DIMENSIONS INDICATED IN NEW WORK FLOOR PLANS PERTAINING TO LAYOUT OF NEW CASEWORK ARE APPROXIMATE AND SHALL BE FIELD VERIFIED BY CONTRACTOR.
11. PAINT INTERIOR OF BUILDING AT ALL AREAS IMPACTED BY NEW HVAC WORK. REFER TO FINISH SCHEDULE ON SHEET A3.01.

NEW WORK NOTES

1. PATCH, REPAIR AND PAINT WALL WHERE EXISTING DRINKING FOUNTAIN, ROOF LADDER ACCESS, EQUIPMENT AND ACCESSORIES HAD BEEN REMOVED.
2. PROVIDE NEW PLASTIC LAMINATE BASE CASEWORK, WALL RUBBER BASE, AND COUNTERTOPS WITH 4" BACK SPLASH. REFER TO DRAWING A9.01.
3. PROVIDE NEW 3'-0" X 7'-0" HOLLOW METAL DOOR, FRAME AND HARDWARE AS INDICATED.
4. 6" METAL STUDS WITH 2 LAYERS OF 5/8" GYPSUM BOARD, IMPACT RESISTANT TO UNDERSIDE OF STRUCTURE.
5. PROVIDE NEW 2'-6" X 3'-0" ROOF HATCH WITH FIXED VERTICAL ROOF ACCESS LADDER. REFER TO DETAILS E2/A6.01, E1, E3 & E4/A6.02.
6. PATCH AND REPAIR CONCRETE FLOOR WHERE EXISTING EQUIPMENT CURB HAD BEEN REMOVED.
7. PROVIDE NEW 3 5/8" 20 GA METAL STUDS @ 16" O.C. WITH IMPACT RESISTANT 5/8" GYPSUM WALL FINISH.
8. PROVIDE NEW SKYLIGHT TO FIT EXISTING ROOF HATCH OPENING AS INDICATED. SEE DETAIL A4/A8.01.
9. PROVIDE NEW FAUCET TO EXISTING CLASSROOM SINKS. REFER TO PLUMBING DRAWINGS.
10. PROVIDE NEW 6'-0" X 7'-0" HOLLOW METAL DOOR, FRAME & HARDWARE AS INDICATED.
11. INFILL FLOOR DRAIN OPENING WITH CEMENT. PATCH AND REPAIR FLOOR TO MATCH REQUIRED FLOOR LEVEL.
12. INFILL EXTERIOR WALL OPENING WITH 8" CMU, RIGID INSULATION AND BRICK. BRICK COLOR & FINISH SHALL BE COMPATIBLE TO ADJACENT EXISTING BRICK.
13. NEW DRYWALL BULKHEAD WALL, 3-5/8" 20 GA METAL STUD WITH GWB, TO ENLARGE WELL OPENING AT CEILING. SEE DETAIL A2/A8.01.
14. PROVIDE NEW STANDING SEAM METAL ROOF AS INDICATED.
15. PROVIDE NEW TAPERED INSULATION AND STANDING SEAM METAL ROOF. REFER TO DETAIL D1/A2.01.
16. PROVIDE A SINGLE BOWL CLASSROOM SINK. REFER TO PLUMBING DRAWINGS.
17. EXISTING ELECTRICAL PANELS TO REMAIN.
18. EXISTING CONCRETE CURB AND WATER HEATER TO REMAIN.
19. PROVIDE NEW PLASTIC LAMINATE BASE AND WALL CABINETS WITH CUBBIES AND COAT HANGERS. REFER TO DRAWING A9.01.
20. PATCH, REPAIR AND MATCH ADJACENT FLOOR FINISHES WHERE BASE CASEWORK HAD BEEN REMOVED.
21. PROVIDE 2" TOPPING OF CONC, SCARIFY EXISTING SURFACE PRIOR TO PLACEMENT
22. PROVIDE 6" THICK CONCRETE RAMP SLOPED @ 1:12 REINFORCED W/ 6X6XW1.4XW1.4 WWM. REFER TO DETAIL D3/A6.02.
23. CLEAN, REFURBISH AND REINSTALL EXISTING STAGE CURTAINS. REFER TO SPEC SECTION 11062.
24. PROVIDE REPLACEMENT REFRIGERATION SYSTEM. REFER TO SPEC SECTION 114120.
25. INFILL INTERIOR MASONRY WALL TO MATCH ADJACENT MATERIAL AND FINISH. PATCH AND REPAIR AS REQUIRED.

HUDSON + ASSOCIATES
ARCHITECTS
120 WEST QUEENS WAY SUITE 201 HAMPTON, VA.
(757) 722-1964 23669

1 REV 4/9/14

GRAFTON BETHEL ELEMENTARY PHASE III PARTIAL ROOF & HVAC REPLACEMENT

410 LAKESIDE DRIVE
YORKTOWN, VIRGINIA 23692-3026

STATE PROJECT NO.
098-14-00-103

COMMONWEALTH OF VIRGINIA
RICHARD S. CORNER
Lic. No. 0057014
2-14-2014
ARCHITECT

FEBRUARY 14, 2014

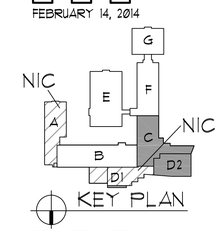

KEY PLAN

FLOOR PLAN AREAS "C" & "D2" & DETAILS

JOB NUMBER 1321

A2.01

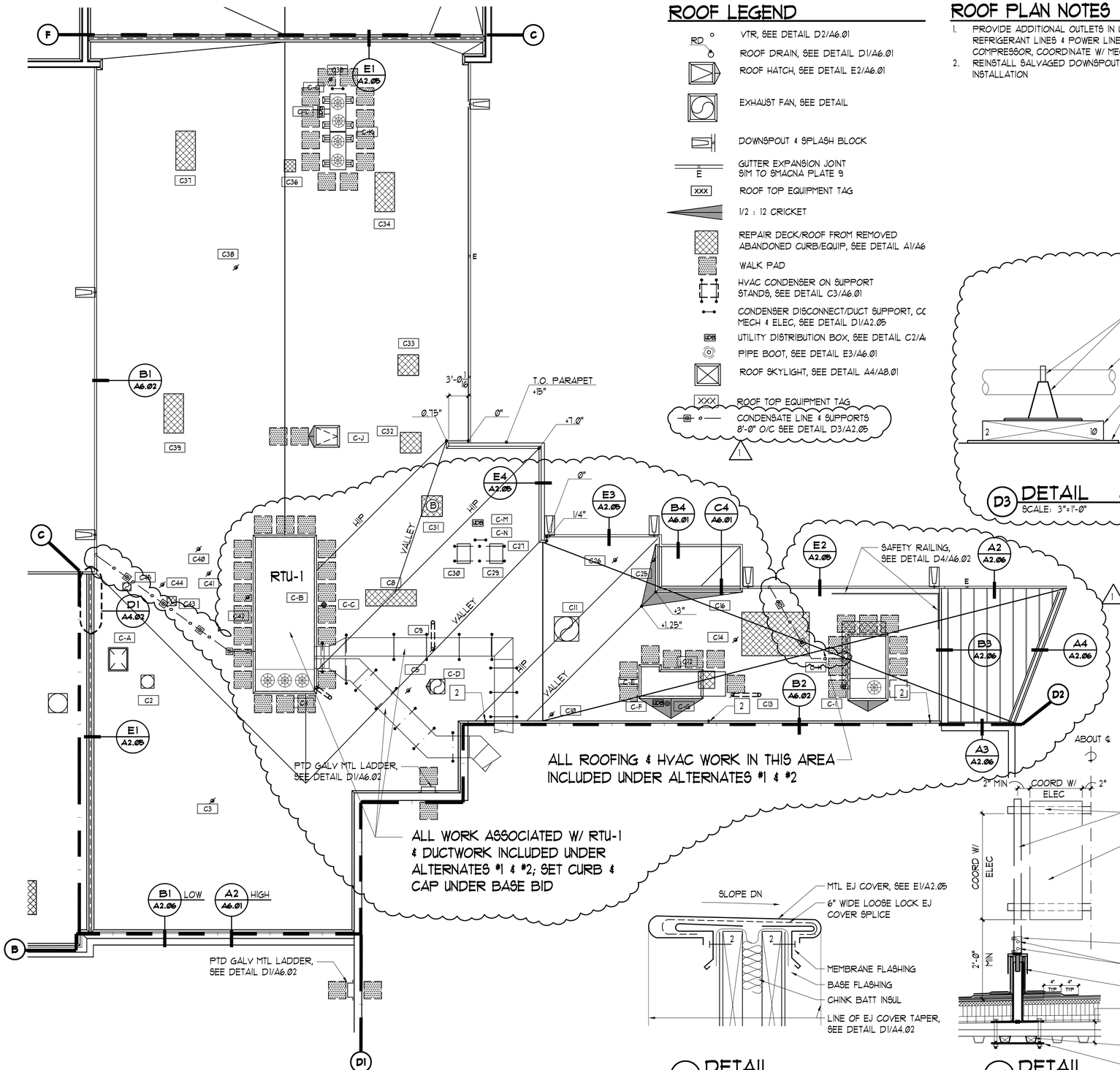

ROOF PLAN AREAS "C" & "D2"

SCALE: 1/8" = 1'-0"

ROOF LEGEND

- RD — VTR, SEE DETAIL D2/A6.01
- ROOF DRAIN, SEE DETAIL D1/A6.01
- ROOF HATCH, SEE DETAIL E2/A6.01
- EXHAUST FAN, SEE DETAIL
- DOWNSPOUT & SPLASH BLOCK
- E — GUTTER EXPANSION JOINT SIM TO SMACNA PLATE 9
- XXX — ROOF TOP EQUIPMENT TAG
- 1/2 : 12 CRICKET
- REPAIR DECK/ROOF FROM REMOVED ABANDONED CURB/EQUIP, SEE DETAIL A1/A6
- WALK PAD
- HVAC CONDENSER ON SUPPORT STANDS, SEE DETAIL C3/A6.01
- CONDENSER DISCONNECT/DUCT SUPPORT, CC MECH & ELEC, SEE DETAIL D1/A2.05
- UDB — UTILITY DISTRIBUTION BOX, SEE DETAIL C2/A
- PIPE BOOT, SEE DETAIL E3/A6.01
- ROOF SKYLIGHT, SEE DETAIL A4/A8.01
- XXX — ROOF TOP EQUIPMENT TAG
- CONDENSATE LINE & SUPPORTS 8'-0" O/C SEE DETAIL D3/A2.05

ROOF PLAN NOTES

X.

1. PROVIDE ADDITIONAL OUTLETS IN UDB FOR REFRIGERANT LINES & POWER LINES CONNECTING TO COMPRESSOR, COORDINATE W/ MECHANICAL
2. REINSTALL SALVAGED DOWNSPOUTS AFTER FMP INSTALLATION

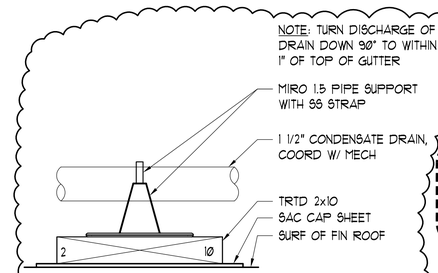

D3 DETAIL — CONDENSATE DRAIN SUPPORT

SCALE: 3"=1'-0"

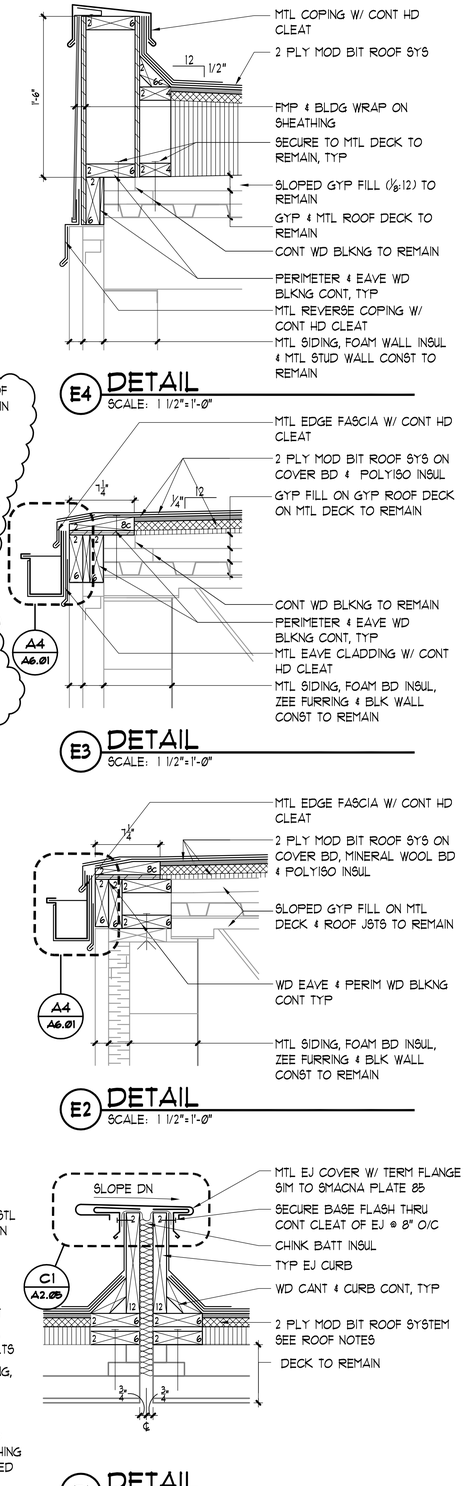

E4 DETAIL

SCALE: 1 1/2"=1'-0"

E3 DETAIL

SCALE: 1 1/2"=1'-0"

E2 DETAIL

SCALE: 1 1/2"=1'-0"

C1 DETAIL

SCALE: 3"=1'-0"

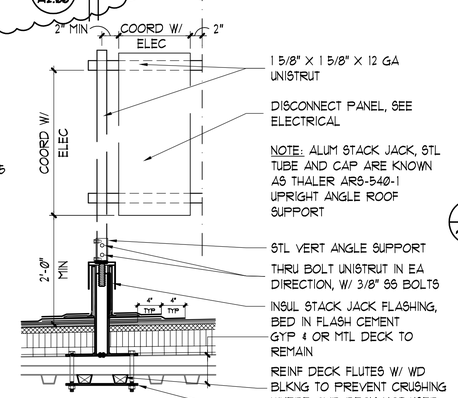

D1 DETAIL

SCALE: 1"=1'-0"

E1 DETAIL

SCALE: 1 1/2"=1'-0"

HUDSON + ASSOCIATES
ARCHITECTS
120 WEST QUEENS WAY SUITE 201 HAMPTON, VA.
(757) 722-1964 23669

1 REV 4/9/14

GRAFTON BETHEL ELEMENTARY PHASE III PARTIAL ROOF & HVAC REPLACEMENT

410 LAKESIDE DRIVE
YORKTOWN, VIRGINIA 23692-3026

STATE PROJECT NO.
098-14-00-103

COMMONWEALTH OF VIRGINIA
RICHARD S. CORNER
Lic. No. 007014
2-14-2014
ARCHITECT

FEBRUARY 14, 2014

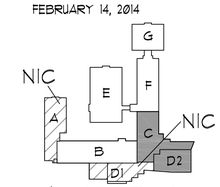

KEY PLAN

ROOF PLAN AREA "C" & "D2" & DETAILS

JOB NUMBER 1321

A2.05

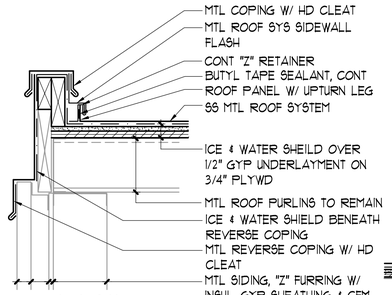

A4 DETAIL
SCALE: 1 1/2"=1'-0"

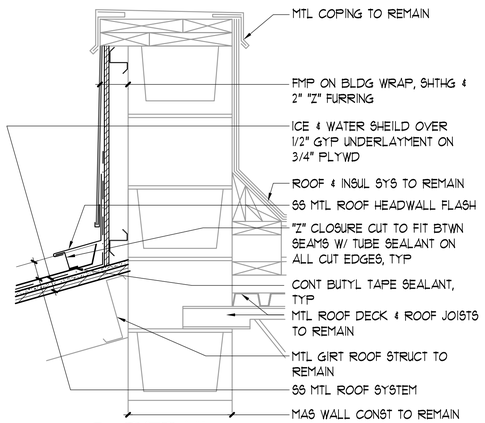

A3 DETAIL
SCALE: 1 1/2"=1'-0"

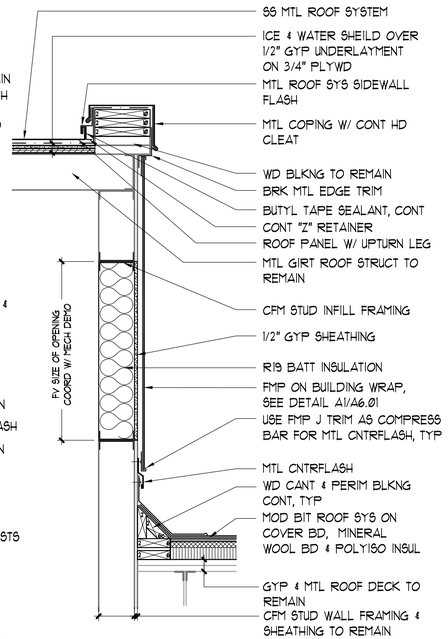

B3 DETAIL
SCALE: 1"=1'-0"

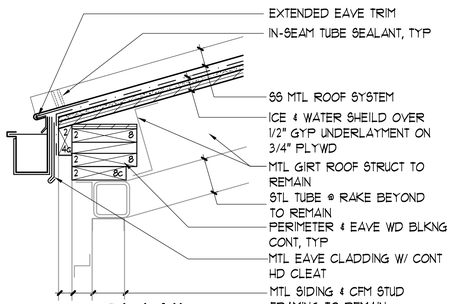

A2 DETAIL
SCALE: 1 1/2"=1'-0"

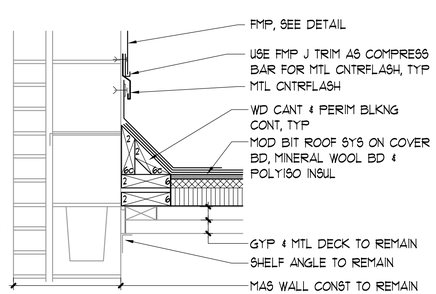

B2 DETAIL
SCALE: 1 1/2"=1'-0"

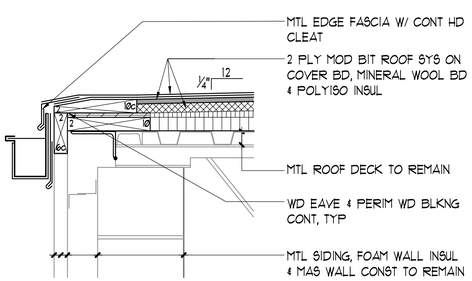

A1 DETAIL
SCALE: 1 1/2"=1'-0"

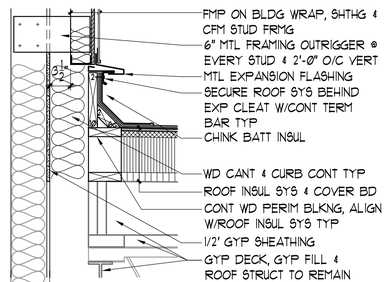

B1 DETAIL
SCALE: 1"=1'-0"

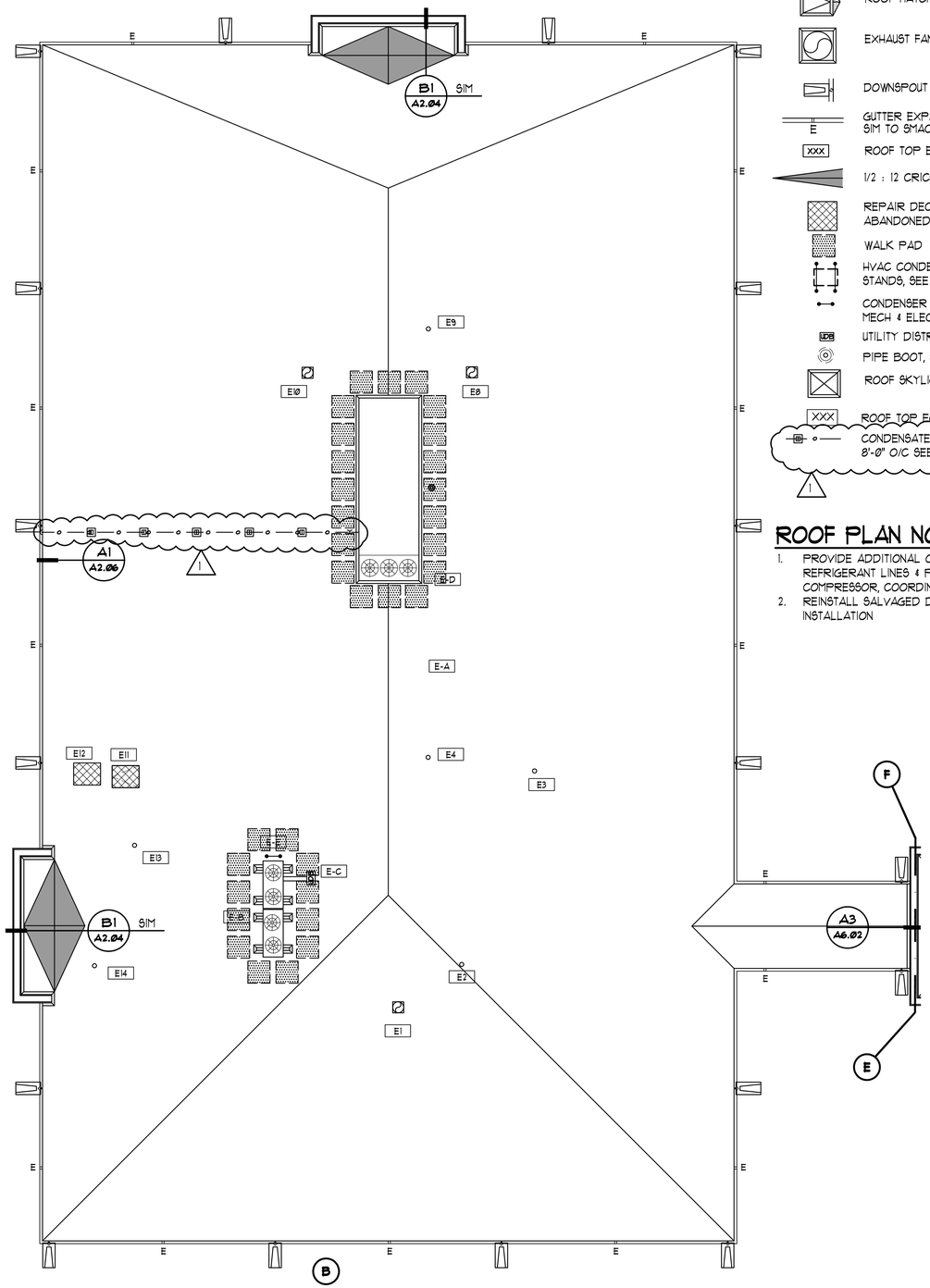

ROOF PLAN AREA "E"
SCALE: 1/8" = 1'-0"

ROOF LEGEND

- RD — VTR, SEE DETAIL D2/A6.01
- ROOF DRAIN, SEE DETAIL D1/A6.01
- ROOF HATCH, SEE DETAIL E2/A6.01
- EXHAUST FAN, SEE DETAIL
- DOWNSPOUT & SPLASH BLOCK
- E — GUTTER EXPANSION JOINT SIM TO SMACNA PLATE 9
- XXX — ROOF TOP EQUIPMENT TAG
- 1/2 : 12 CRICKET
- REPAIR DECK/ROOF FROM REMOVED ABANDONED CURB/EQUIP, SEE DETAIL A1/A6.02
- WALK PAD
- HVAC CONDENSER ON SUPPORT STANDS, SEE DETAIL C3/A6.01
- CONDENSER DISCONNECT/DUCT SUPPORT, COORD W/ MECH & ELEC, SEE DETAIL D1/A2.05
- UDB — UTILITY DISTRIBUTION BOX, SEE DETAIL C2/A6.01
- PIPE BOOT, SEE DETAIL E3/A6.01
- ROOF SKYLIGHT, SEE DETAIL A4/A8.01
- XXX — ROOF TOP EQUIPMENT TAG
- CONDENSATE LINE & SUPPORTS 8'-0" O/C SEE DETAIL D3/A2.05 (1)

ROOF PLAN NOTES

X.

1. PROVIDE ADDITIONAL OUTLETS IN UDB FOR REFRIGERANT LINES & POWER LINES CONNECTING TO COMPRESSOR, COORDINATE W/ MECHANICAL
2. REINSTALL SALVAGED DOWNSPOUTS AFTER FMP INSTALLATION

HUDSON + ASSOCIATES
ARCHITECTS
120 WEST QUEENS WAY SUITE 201 HAMPTON, VA.
(757) 722-1964 23669

1 REV 4/9/14

GRAFTON BETHEL ELEMENTARY PHASE III PARTIAL ROOF & HVAC REPLACEMENT

410 LAKESIDE DRIVE
YORKTOWN, VIRGINIA 23692-3026

STATE PROJECT NO.
098-14-00-103

COMMONWEALTH OF VIRGINIA
RICHARD S. CORNER
Lic. No. 007014
2-14-2014
ARCHITECT

FEBRUARY 14, 2014

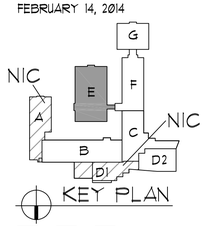

KEY PLAN

ROOF PLAN
AREA "E"
& DETAILS

JOB NUMBER 1321

A2.06

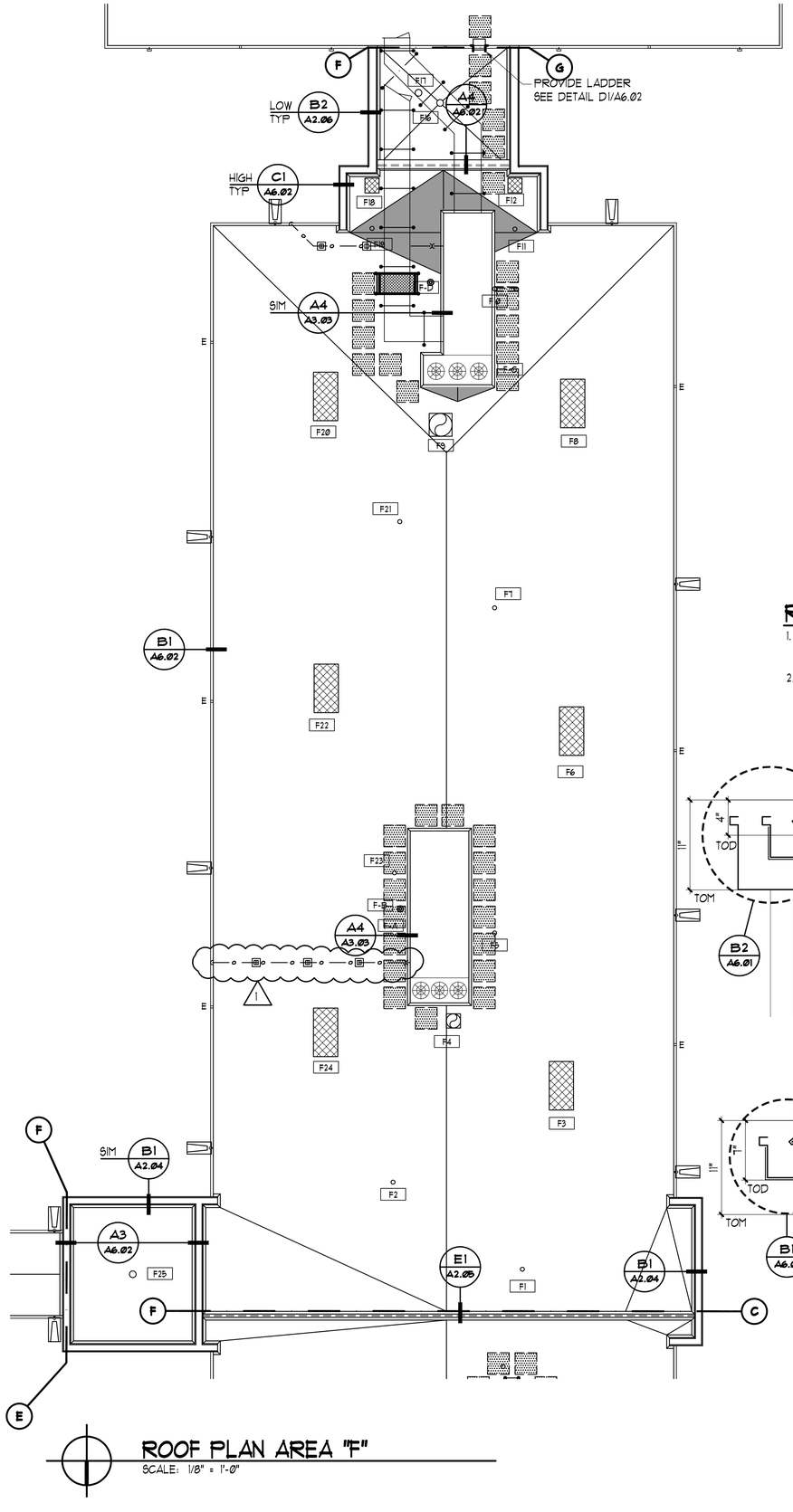

ROOF PLAN AREA "F"

SCALE: 1/8" = 1'-0"

ROOF LEGEND

- RD — VTR, SEE DETAIL D2/A6.01
- ROOF DRAIN, SEE DETAIL D1/A6.01
- ROOF HATCH, SEE DETAIL E2/A6.01
- EXHAUST FAN, SEE DETAIL
- DOWNSPOUT & SPLASH BLOCK
- E — GUTTER EXPANSION JOINT SIM TO SMACNA PLATE 9
- XXX — ROOF TOP EQUIPMENT TAG
- 1/2 : 12 CRICKET
- REPAIR DECK/ROOF FROM REMOVED ABANDONED CURB/EQUIP, SEE DETAIL A1/A6.02
- WALK PAD
- HVAC CONDENSER ON SUPPORT STANDS, SEE DETAIL C3/A6.01
- CONDENSER DISCONNECT/DUCT SUPPORT, COORD W/ MECH & ELEC, SEE DETAIL D1/A2.05
- UDB — UTILITY DISTRIBUTION BOX, SEE DETAIL C2/A6.01
- PIPE BOOT, SEE DETAIL E3/A6.01
- ROOF SKYLIGHT, SEE DETAIL A4/A8.01
- XXX — ROOF TOP EQUIPMENT TAG
- 1 — CONDENSATE LINE & SUPPORTS 8'-0" O/C SEE DETAIL D3/A2.05

ROOF PLAN NOTES

X.

1. PROVIDE ADDITIONAL OUTLETS IN UDB FOR REFRIGERANT LINES & POWER LINES CONNECTING TO COMPRESSOR, COORDINATE W/ MECHANICAL
2. REINSTALL SALVAGED DOWNSPOUTS AFTER FMP INSTALLATION

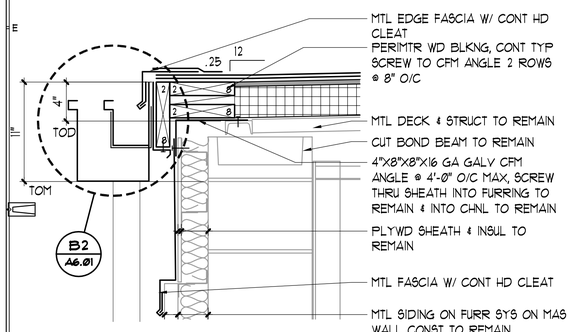

C2 DETAIL

SCALE: 1 1/2" = 1'-0"

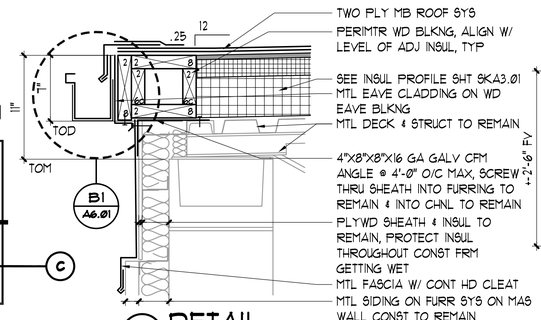

C1 DETAIL

SCALE: 1 1/2" = 1'-0"

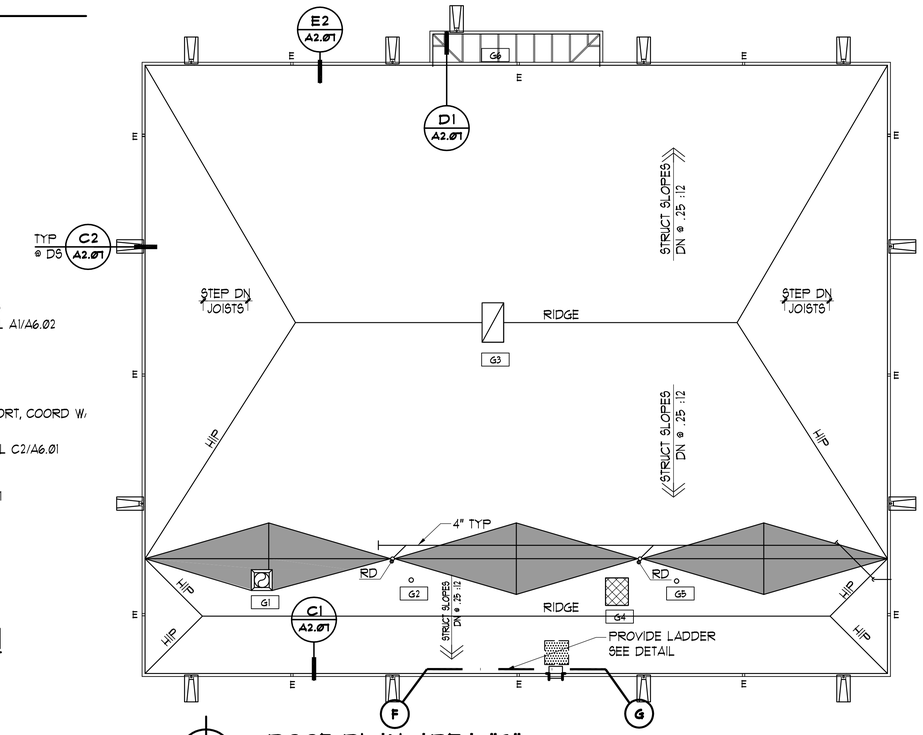

ROOF PLAN AREA "G"

SCALE: 1/8" = 1'-0"

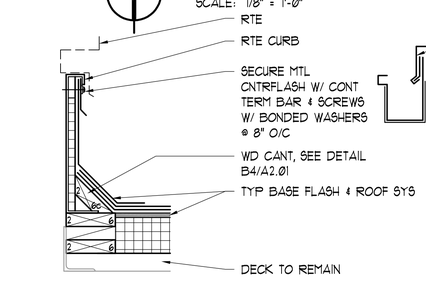

D2 DETAIL

SCALE: 1 1/2" = 1'-0"

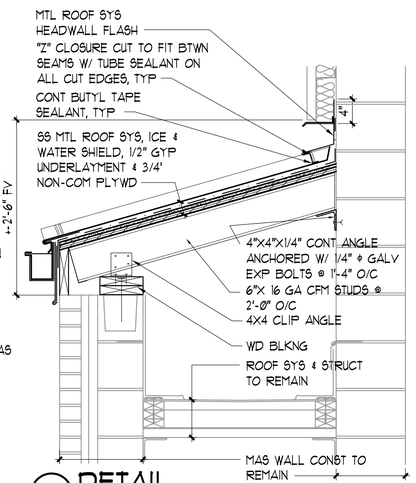

D1 DETAIL

SCALE: 1" = 1'-0"

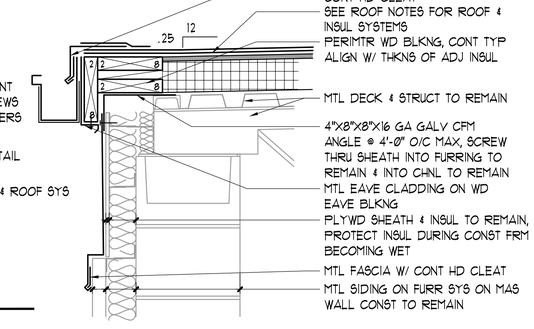

E2 DETAIL

SCALE: 1 1/2" = 1'-0"

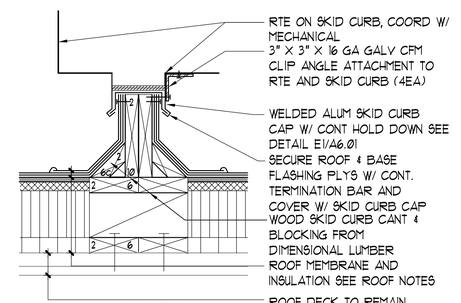

E1 DETAIL

SCALE: 1 1/2" = 1'-0"

HUDSON + ASSOCIATES
ARCHITECTS
120 WEST QUEENS WAY SUITE 201 HAMPTON, VA.
(757) 722-1964 23669

1 REV 4/9/14

GRAFTON BETHEL ELEMENTARY PHASE III PARTIAL ROOF & HVAC REPLACEMENT

410 LAKESIDE DRIVE
YORKTOWN, VIRGINIA 23692-3026

STATE PROJECT NO.
098-14-00-103

COMMONWEALTH OF VIRGINIA
RICHARD S. CORNER
Lic. No. 007014
2-14-2014
ARCHITECT

FEBRUARY 14, 2014

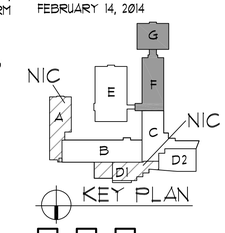

ROOF PLAN AREAS "F" & "G" & DETAILS

JOB NUMBER 1321

A2.07

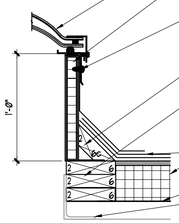

A4 DETAIL
SCALE: 1 1/2" = 1'-0"

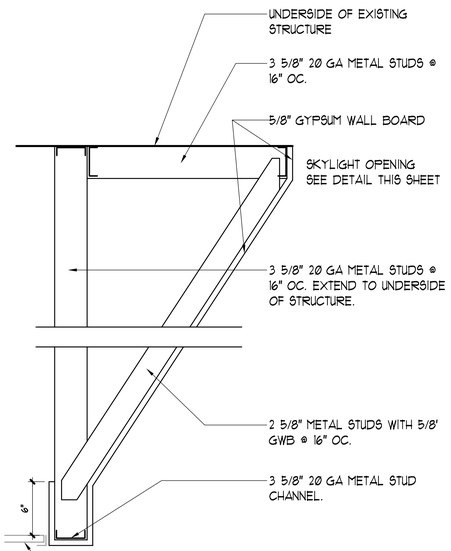

A2 DETAIL
SCALE: 1 1/2"=1'-0"

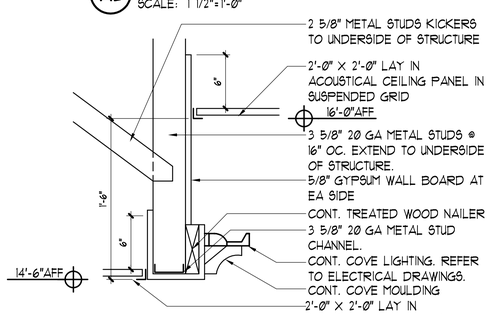

A1 DETAIL
SCALE: 1 1/2"=1'-0"

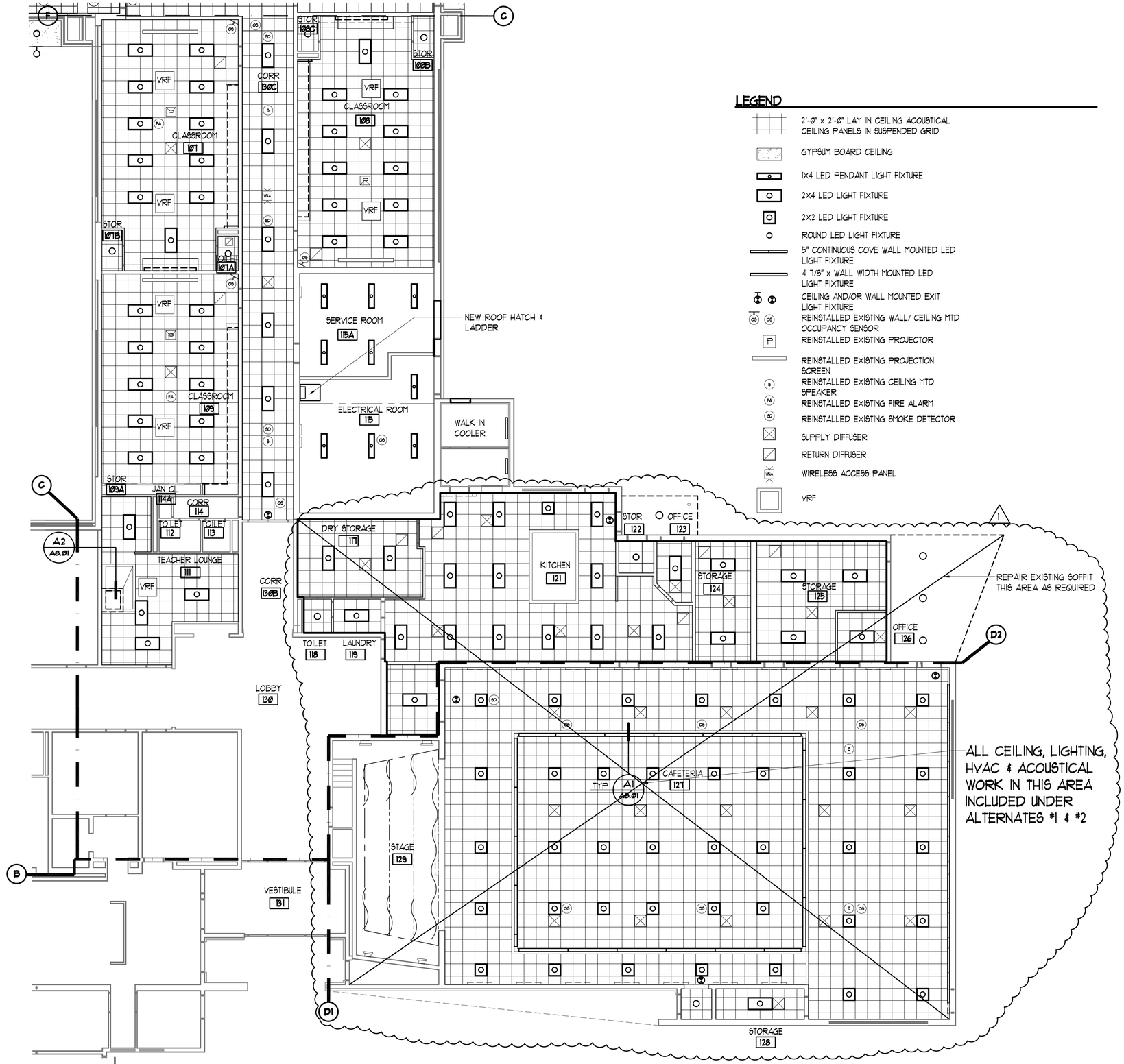

REFLECTED CEILING PLAN AREAS "C" & "D2"
SCALE: 1/8" = 1'-0"

LEGEND

- 2'-0" x 2'-0" LAY IN CEILING ACOUSTICAL CEILING PANELS IN SUSPENDED GRID
- GYPSUM BOARD CEILING
- 1X4 LED PENDANT LIGHT FIXTURE
- 2X4 LED LIGHT FIXTURE
- 2X2 LED LIGHT FIXTURE
- ROUND LED LIGHT FIXTURE
- 5" CONTINUOUS COVE WALL MOUNTED LED LIGHT FIXTURE
- 4 7/8" x WALL WIDTH MOUNTED LED LIGHT FIXTURE
- CEILING AND/OR WALL MOUNTED EXIT LIGHT FIXTURE
- OS — REINSTALLED EXISTING WALL/ CEILING MTD OCCUPANCY SENSOR
- P — REINSTALLED EXISTING PROJECTOR
- REINSTALLED EXISTING PROJECTION SCREEN
- S — REINSTALLED EXISTING CEILING MTD SPEAKER
- FA — REINSTALLED EXISTING FIRE ALARM
- SD — REINSTALLED EXISTING SMOKE DETECTOR
- SUPPLY DIFFUSER
- RETURN DIFFUSER
- WAL — WIRELESS ACCESS PANEL
- VRF

HUDSON + ASSOCIATES
ARCHITECTS
120 WEST QUEENS WAY SUITE 201 HAMPTON, VA.
(757) 722-1964 23669

1 REV 4/9/14

GRAFTON BETHEL ELEMENTARY PHASE III PARTIAL ROOF & HVAC REPLACEMENT

410 LAKESIDE DRIVE
YORKTOWN, VIRGINIA 23692-3026

STATE PROJECT NO.
098-14-00-103

COMMONWEALTH OF VIRGINIA
RICHARD S. CORNER
Lic. No. 007014
2-14-2014
ARCHITECT

FEBRUARY 14, 2014

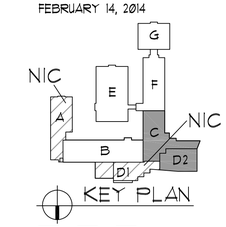

REFLECTED CEILING PLAN AREAS "C" & "D2"

JOB NUMBER 1321

A8.01

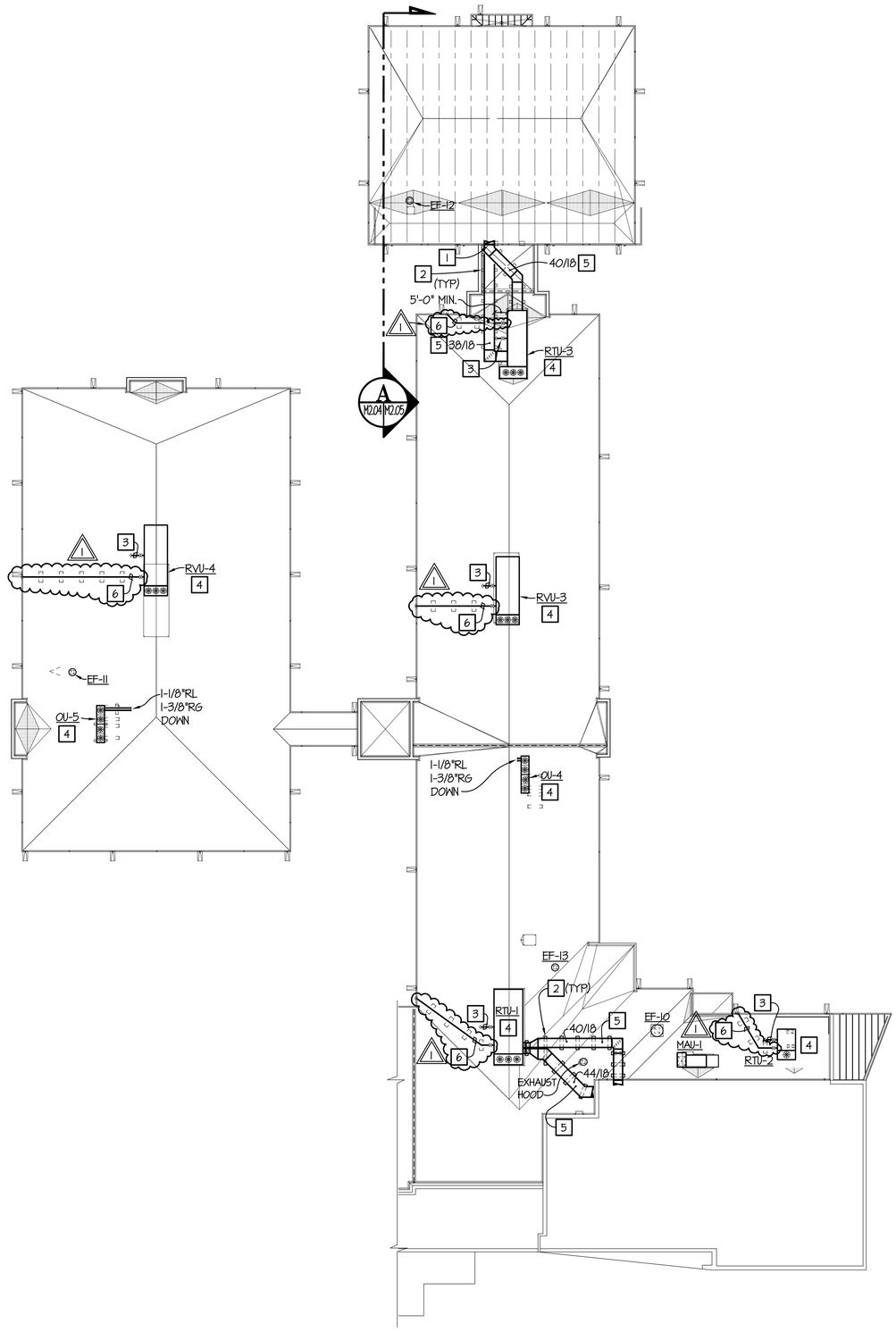

ROOF PLAN

SCALE : 1" = 20'-0"

THOMPSON
Consulting Engineers
22 ENTERPRISE PARKWAY HAMPTON, VA 23666
TELEPHONE: (757) 599-4415 FAX: (757) 599-4133
PROJECT NUMBER: 13051

NEW WORK NOTES: (THIS SHEET ONLY)

1. REUSE EXISTING WALL OPENING. REFER TO ARCHITECTURAL DRAWINGS FOR FLASHING DETAILS.
2. DUCTWORK SUPPORT. REFER TO SHEET M4.01 FOR DETAILS.
3. 1-1/2" CONDENSATE DRAIN PIPING. TERMINATE PIPE ON ROOF. PROVIDE DRIP PADS.
4. REFER TO SHEET M4.01 FOR UNIT MOUNTING DETAILS.
5. PROVIDE DOUBLE-WALL DUCTWORK WITH 3" INSULATION BETWEEN SOLID WALLS. COAT WITH WEATHERPROOF COATING.
6. 1" HEAT EXCHANGER CONDENSATE DRAIN PIPING. RUN PIPING TO GUTTER SYSTEM. REFER TO M4.1 FOR PIPING SUPPORT DETAILS.

HUDSON + ASSOCIATES
ARCHITECTS
120 WEST QUEENS WAY SUITE 201 HAMPTON, VA.
(757) 722-1964 23669

1 4/9/2014

GRAFTON BETHEL ELEMENTARY PHASE III PARTIAL ROOF & HVAC REPLACEMENT

410 LAKESIDE DRIVE
YORKTOWN, VIRGINIA 23692-3026

STATE PROJECT NO.
038-14-00-103

COMMONWEALTH OF VIRGINIA
02-14-14
KEVIN D. ALLEN
Lic. No. 023349
PROFESSIONAL ENGINEER

FEBRUARY 14, 2014

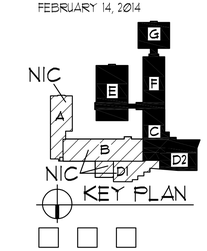

ROOF PLAN

JOB NUMBER 1321

M2.05