HUDSON + ASSOCIATES
ARCHITECTS

THE YORK COUNTY SCHOOL DIVISION

PARTIAL ROOF & HVAC SYSTEM REPLACEMENT
at
GRAFTON-BETHEL ELEMENTARY SCHOOL, PHASE III
York County School Division

PROJECT MANUAL

IFB No. 1910

FINAL SPECIFICATIONS – ISSUED FOR CONSTRUCTION
February 14, 2014

THIS PAGE LEFT INTENTIONALLY BLANK

TABLE OF CONTENTS

DIVISION 00 - PROCUREMENT & CONTRACTING REQUIREMENTS
000101 Project Directory
Invitation for Bids (IFB No. 1910)
AIA A201 General Conditions of the Contract for Construction

DIVISION 01 - GENERAL CONDITIONS
011000 Summary of Work
012100 Allowances
012200 Unit Prices
012300 Alternates
012500 Substitution Procedures
012600 Contract Modification Procedures
012900 Applications for Payment
013100 Project Meetings
013300 Submittals
014000 Quality Requirements
015000 Temporary Facilities
016000 Product Requirements
017300 Execution
017400 Warranties and Bonds
017700 Project Closeout
017823 Operation and Maintenance Data
017839 Project Record Documents
019100 Special Inspections

DIVISION 02 - SITEWORK
024119 Selective Demolition

DIVISION 03 - CONCRETE
0330000 Cast-in-Place Concrete

DIVISION 04 - MASONRY
042000 Unit Masonry

DIVISION 05 - METALS
051200 Structural Steel
053100 Steel Decking
054000 Cold-Formed Metal Framing
055000 Metal Fabrications

DIVISION 06 - WOOD & PLASTIC
061000 Rough Carpentry
061600 Sheathing
064023 Interior Architectural Woodwork

DIVISION 07 - THERMAL & MOISTURE PROTECTION
071113 Bituminous Dampproofing
072100 Thermal Insulation
074113 Metal Roof Panels
074213 Metal Wall Panels
075216 Styrene-Butadiene-Styrene (SBS) Modified Bituminous Membrane Roofing
076200 Sheet Metal Flashing and Trim
077200 Roof Accessories
078413 Penetration Firestopping
079200 Joint Sealers

DIVISION 8 - DOORS AND WINDOWS
081113 Hollow Metal Doors and Frames
087100 Door Hardware

DIVISION 9 - FINISHES
092216 Non-Structural Metal Framing
092900 Gypsum Board
095113 Acoustical Panel Ceilings
096513 Resilient Base and Accessories
096520 Resilient Tile Flooring
098433 Sound-Absorbing Wall Units
099123 Interior Painting
099600 High-Performance Coatings

DIVISION 10 - Not Used

DIVISIONS 11 - EQUIPMENT
110162 Maintenance of Stage Curtains
114120 Food Service Refrigeration Equipment

DIVISIONS 12 Thru 22 - Not Used

DIVISION 22 - PLUMBING
220500 Plumbing

DIVISION 23 - HEATING, VENTILATING, AND AIR CONDITIONING
230100 Mechanical General Provisions
230500 Heating, Ventilating and Air Conditioning
230593 Testing, Adjusting and Balancing
230700 Mechanical Insulation
230900 Automatic Temperature Controls

DIVISIONS 24 Thru 25 - Not Used

DIVISION 26 - ELECTRICAL

260100 Electrical General Provisions
260500 Material and Methods
260518 Metal Clad Cables
260519 Conductors
260526 Grounding
260529 Supporting Devices
260533 Raceways
260534 Electrical Boxes and Fittings
262416 Panelboards
262420 Motors and Controls
262726 Wiring Devices and Device Plates
264313 Panelboard Surge Protection Devices
265100 Interior Building Lighting

DIVISIONS 27 THRU 32 - Not Used

THIS PAGE LEFT INTENTIONALLY BLANK

SECTION 000101 - PROJECT DIRECTORY

Owner: York County Public Schools
302 Dare Road
Yorktown, Virginia 23692

Owner's Contact: York County Public Schools
Attn: Mr. Mark Tschirhart
Associate Director for Capital Plans and Projects
302 Dare Road
Yorktown, Virginia 23692
Phone: (757) 898-0499
mtschirhart@ycsd.york.va.us

Contracting Contact: County of York, Central Purchasing
Attn: Victor Robinson
120 Alexander Hamilton Blvd.
Yorktown, Virginia 23690
Phone: (757) 890-3682
victor.robinson@yorkcounty.gov

Architect: Hudson + Associates Architects
Attn: Richard S. Corner, AIA, CSI
120 West Queens Way, Suite 201
Hampton, Virginia 23669
Phone: (757) 722-1964
rcorner@hudsonarch.com

Mechanical/ Electrical Engineer: Thompson Consulting Engineers
Attn: Kevin D. Allen, P. E.
22 Enterprise Parkway, Suite 200
Hampton, Virginia 23666
Phone: (757) 599-4415
kallen@mjtengineers.com

Structural Engineer: Neser-Roomsburg-Workman
Attn: Kevin Roomsburg, P.E.
748 Lord Dunmore Drive, Suite 101
Virginia Beach, Virginia 23464-2664
Phone: (757) 474-0612
kmr@nrwengineering.com

END OF SECTION 000101

THIS PAGE LEFT INTENTIONALLY BLANK

COUNTY OF YORK, VIRGINIA
INVITATION FOR BID
(IFB)

Issue Date: March 18, 2014 **IFB No. 1910**

Title: Partial Roof & HVAC System Replacement at
Grafton Bethel Elementary School, Phase Three.

Classification Code: 91066

Issuing Agency:
County of York, Virginia
Central Purchasing
120 Alexander Hamilton Blvd.
Yorktown, Virginia 23690

Using Agency:
County School Board of York County, Va.
Attn: Mark Tschirhart
302 Dare Road
Yorktown, Virginia 23692

Sealed Bids Will Be Received Until **Tuesday April 15, 2014, at 3:30pm in the Purchasing Conference Room** at (The Issuing Agency Location above), at Which Time They Shall Be Opened In Public And Read Aloud.

Note: Pre-Bid Meeting: **Grafton Bethel Elementary School, Tuesday April 1, 2014 at 10:00am** meet in the main office area. 410 Lakeside Drive, Yorktown, VA. 23692.

Inquiries For Information To Be Directed To: Victor Robinson, Buyer, (757) 890-3680
E-mail address: victor.robinson@yorkcounty.gov

SEND BIDS DIRECTLY TO THE ISSUING AGENCY SHOWN ABOVE

In Compliance With This Invitation For Bids And To All The Conditions Imposed Herein, The Undersigned Offers And Agrees to Furnish The Materials Described At the Prices Indicated In Section **29.0**

Name and Address of Firm:

_____ Date: _____

_____ By: _____
Signature in Ink

_____ Print/Type Name: _____

Telephone No: (_____) _____ Title: _____

E-mail: _____ Federal Tax ID#: _____

State Corporation Commission (SSC) No. _____

1.0 PURPOSE / PROJECT DESCRIPTION

The Project consists of replacing an existing, un-ballasted EPDM roof system with a new 2-ply modified roof system over the tapered insulation over an existing metal or gypsum deck at portions of the school. Sheet metal roofing, flashings and drainage items are also included. The Project also consists of replacing existing HVAC systems throughout portions of the school. Incidental to the work is replacement of existing ceilings and lighting systems throughout areas impacted by HVAC system replacement. Work also includes limited replacement of plumbing piping and fixtures, sinks and casework. The Contract Documents relevant to the work includes the Project "Partial Roof and HVAC System Replacement at Grafton-Bethel Elementary School, Phase III, York County School Division Final Specifications – Issued for Construction" prepared by Hudson + Associates Architects and its affiliated consulting engineers and dated February 14, 2014.

Project Name: Partial Roof & HVAC System Replacement at Grafton Bethel Elementary School, Phase Three.

Grafton Bethel Elementary School
410 Lakeside Drive
Yorktown, VA 23692

Owner: County School Board OF York County, Virginia
302 Dare Road
Yorktown, VA 23692

Architect: Hudson + Associates, Architects PLLC
120 West Queens Way, Suite 201
Hampton, VA 23669

1.1 CONTRACTOR USE OF PREMISES

A. General: Use of premises, work and storage areas shall be discussed at the pre-construction conference. In general, areas will be made available immediately adjacent to the building for the storage of materials and work may be carried on between the hours of 6:30 am and 9:00 pm.

B. The administrative staff will occupy the building throughout the construction period. Visitors to the building during this time will be directed to the office on the north side of the building.

C. A summer recreation program will utilize the gymnasium during the summer. Participants and staff will use the parking lot on the west side of the building.

D. The north parking lot and access to the building on that side shall be reserved for the Contractor and their forces.

1.2 SUMMMARY OF SCOPE OF WORK

This project consists of the removal of approximately 48,900 SF of fully adhered, 40 mil EPDM roof membrane and insulation installed in 1990.

A. Portions of the roof at Areas 'B,' 'C' and 'F,' (as shown on the drawings) totaling approximately 30,600 SF, are installed over a gypsum deck overlaid with gypsum fill that was roughly sloped 1/8-inch per 12" to a perimeter drainage system. The sloped gypsum fill shall remain. Approximately 18,300SF of the roof is over sloped at 1/8-inch per 12" over metal deck at Areas 'E' and 'G' (as shown on the drawings).

B. This project adds 1/8-inch per 12" minimum sloped insulation over the existing gypsum fill to produce intended minimum roof slopes of 1/4-inch per 12". The increased roof slope requires modifying/replacing a limited quantity of metal wall panels adjacent to Areas 'B' and 'C.

C. This project replaces a limited quantity of standing seam metal roofing. Limited quantities of new standing seam metal roofing will be added in small areas (as shown on the drawings).

D. Area 'B' (as shown on the drawings) to be re-roofed has previously received new HVAC systems within and on top of the roof to be replaced. Supports for the rooftop equipment were designed under the previous phase to enable replacement of the roof while the equipment remains in place.

E. The Owner has previously ordered and obtained five rooftop HVAC units that will be furnished to the Contractor for installation under this Contract. A summary describing these units is included on the Mechanical Drawings.

F. Replacement of HVAC systems is required at Areas 'C,' 'D2,' 'E,' 'F' and 'G' (as shown on the drawings). Interior ceilings and lighting throughout these areas will also be replaced. New rooftop-mounted HVAC units will be required at all of these areas EXCEPT Area 'D2' (as shown on the drawings), which was recently re-roofed under a previous phase.

G. Existing refrigeration systems at Kitchen walk-in coolers are to be replaced under this Contract. This includes interior evaporator coils, rooftop-mounted compressor/condenser units (one for freezer, one for refrigerator), refrigerant lines and control system.

H. Structural upgrades to the existing roof will be required at various locations for support of new rooftop MAUs, consisting of adding new beams and angles where needed on top of existing load-bearing masonry walls.

I. Interior plumbing work includes replacement of limited quantities of original galvanized steel water supply piping and limited replacement of fixtures.

J. Incidental interior renovations include prepping and painting walls and other surfaces throughout Areas 'C,' 'D2,' 'E,' 'F' and 'G.' Also included are limited replacement of cabinets and countertops, interior partition construction, door demolition and new door installation, new interior soffit construction, careful removal, cleaning and reinstallation of existing stage curtains and other minor, related aspects of work.

K. Work to be Performed by other Contractors: The York County School Division will employ others to accomplish the following related items:

1. Existing Movable Fixtures, Furniture and Equipment at all work areas will be temporarily removed, stored and reinstalled by others.
2. Existing audio-visual systems and equipment, including video and audio signal cabling, shall be temporarily removed, stored and reinstalled by others. This shall include ceiling-mounted projectors, local area speakers, and ceiling-hung, retractable projection screens. Power outlets for overhead projectors shall remain at ceilings, and shall be reinstalled in ceiling panels by others.
3. Existing fire detection, alarm and notification devices that are mounted in ceilings shall be temporarily removed, stored and reinstalled by others. This shall include smoke and heat detectors, audible and visual strobe notification devices.
4. Existing wireless data network antennae, where mounted in corridor ceilings, shall be temporarily removed, stored and reinstalled by others.
5. Existing building automation and security devices, including room occupant sensors, CCTV cameras and other detection devices, where mounted in existing ceilings, shall be temporarily removed, stored and reinstalled by others.

L. The Owner has conducted hazardous material testing in the building. No asbestos was identified. If during the course of the work suspicious material is encountered, immediately notify the Mr. Frank Pitchford, YCSD's Safety Manager (e-mail fpitchford@ycsd.york.va.us or phone (757)876-8801). Mr. Pitchford will conduct testing and prepare abatement specifications and procedures as required.

2.0 CONTRACT TIME

A.) The Contractor shall have access to the site commencing with the Notice to Proceed. **The Work shall start no earlier than Monday, June 16, 2014 and all work must be substantially completed by August 20, 2014.** Final Completion shall be no later than September 25, 2014.

B.) The Contractor should plan on the following weather (rain and temperature) days for the project duration, including all time extensions made to the contract, up until final completion is given. Time extensions for this project will only be given if the actual rain days exceed the days listed below.

January	10 Days
February	9 Days
March	11 Days
April	11 Days

May	12 Days
June	10 Days
July	11 Days
August	10 Days
September	9 Days
October	7 Days
November	8 Days
December	10 Days

C.) A day will be considered a weather day when, on a work (Monday through Friday)day, it rains at the job site so less than 4 hours of production can occur or when the chance of rain exceeds 70% as reported by a source agreed upon at the pre-construction meeting or when the temperature does not rise above 40 degrees for more than 4 hours. Weather delay claims must be made in writing on the day they occur. Days that are weather days will be established by mutual agreement between the Owner and the Contractor on the day they occur, but the Owner will have final authority on that day to establish whether or not the day will be considered a weather day.

3.0 PRE-BID CONFERENCE:

Pre-Bid Meeting: **Grafton Bethel Elementary School, Tuesday April 1, 2014 at 10:00am** meet in the main office area. 410 Lakeside Drive, Yorktown, VA. 23692.
This will be the only time bidders will be allowed to go up on the roof. A picture ID may be required.

4.0 PLANS AND SPECIFICATIONS:

Plans and specifications may be obtained from the office of the Central Purchasing Division, County of York, Virginia, 120 Alexander Hamilton Boulevard, Yorktown, Virginia 23690 hereinafter "Central Purchasing" between the hours of 8:15 a.m. and 5:00 p.m. **A non-refundable fee** in the amount of $75.00 per set payable by, cash, credit card, check to Deborah Robinson, Treasurer, County of York, will be required for each set of Bidding Documents. Requests for Plans and Specifications to be shipped/mailed must be in writing and accompanied by additional **non-refundable fee** in the amount of $25.00 per set made payable to Deborah Robinson, Treasurer, County of York.

Plans and specifications may also be examined at the plan rooms of the Peninsula and Norfolk Builders Exchange.

Bid withdrawal procedures shall be in accordance with the Code of Virginia Section 2.2-4330 (A), procedure 2.

Contact Victor Robinson at 890-3680 victor.robinson@yorkcounty.gov for additional information or assistance. The County reserves the right to reject any and all bids, award this contract in whole or in part, and to waive any informalities in bidding.

5.0 GENERAL TERMS AND CONDITIONS:
Except to the extent further modified by this IFB, the General Terms and Conditions are set out in AIA Document A201-1997 "General Conditions of the Contract for Construction," as modified by the Supplemental Conditions, section 24.0 herein. Hereinafter, all references to AIA Document A201 shall mean AIA Document A201- 1997 edition "General Conditions of the Contract for Construction," as so modified.

6.0 APPLICABLE POLICY:
This solicitation is subject to the provisions of the County of York, Virginia, Procurement Policy (Ordinance No. 12-13r, effective September 18, 2012), and any revisions thereto.

7.0 MANDATORY USE OF OWNER'S FORM:
All responses to an Invitation for Bids (IFB) must be submitted on and in accordance with this form. If more space is required to furnish a description of the commodities and/or services offered or delivery terms, the bidder may attach a letter hereto which will be made a part of the bid. All bids must be submitted in a sealed envelope plainly marked with the IFB number, date and time of the bid opening.

8.0 OPENING DATE/TIME:
Bids and amendments thereto, or withdrawal of bids submitted, if received by Central Purchasing after the date and time specified for scheduled receipt, will not be considered. It will be the responsibility of the Bidder to see that his bid is in Central Purchasing by the specified time and date. **There will be no exceptions. Date of postmark will not be considered. Phone or telegraphic bids (including FAX) will not be accepted.**

9.0 INCONSISTENCIES IN CONDITIONS:
In the event there are inconsistencies between the Terms and Conditions of AIA Document A201-1997, as modified by the Supplemental Conditions and IFB 1910, and the Invitation For Bids 1910 and other schedules contained herein, the IFB shall take precedence.

10.0 CLARIFICATIONS OF TERMS:
If any prospective bidder has questions about the specifications or other solicitation documents, the prospective bidder should contact the buyer whose name appears on the face of the solicitation. Any revisions to the solicitation will be made only by written addendum issued by Central Purchasing .

11.0 TESTING/INSPECTIONS:
The Owner reserves the right to conduct any test/inspection it may deem advisable to ensure that the goods and services conform to the specification. Owner may require a demonstration of equipment offered by Bidders.

12.0 ETHICS IN PUBLIC CONTRACTING:
By submitting their bids, all bidders certify that their bids are made without collusion or fraud and that they have not offered or received any kickbacks or inducements from any other bidder, supplier, manufacturer or subcontractor in connection with their bid, and that they have not

conferred on any public employee having official responsibility for this procurement transaction any payment, loan, subscription, advance, deposit of money, services or anything of more than nominal value, present or promised unless consideration of substantially equal or greater value was exchanged.

13.0 WARRANTY:
Warranties shall be provided in accordance with the Project Manual prepared by Hudson + Associates Architects, PLLC, dated February 14, 2014, "Partial Roof and HVAC System Replacement at Grafton-Bethel Elementary School, Phase III, York County School Division Final Specifications – Issued for Construction"
The Bidder agrees that the parts, supplies, materials and service furnished under any award resulting from this solicitation shall be covered by the most favorable commercial warranties the bidder gives any customer for such parts, supplies and services and that the rights and remedies provided therein are in addition to and do not limit those available to the Owner by any other clause of this solicitation, the contract or applicable state or federal law.

14.0 AVAILABILITY OF FUNDS:

It is understood and agreed between the parties herein that Owner shall be bound hereunder only to the extent of the funds available or which may hereafter become available for the purpose of this IFB1910 and Contract.

15.0 INFORMATION FOR BIDDERS:
Bids must comply with all of the requirements of this IFB.

15.1 Award will be made to the lowest responsible and responsive bidder. The quality of the products and services to be supplied, their conformity with the specifications, their suitability to the requirements of the Owner, and the delivery/completion terms will be taken into consideration in making the award.

15.2 Cash discounts may be offered by bidder for prompt payment of bills, but such discount will not be taken into consideration in determining the low bidder but will be taken into consideration in awarding tie bids. The discount period will be computed from the date delivery/completion is accepted by Owner or from date correct invoice is received by the Owner, whichever is the later date.

15.3 Acceptance of a bid on behalf of Owner by the County of York, Virginia, Central Purchasing, is not an order to proceed.

15.4 Each bid is received with the understanding that the acceptance in writing by the Owner of the offer to furnish any or all of the equipment and services described therein, shall constitute a contract between the bidder and the Owner, which shall bind the bidder on his part to furnish and deliver the equipment and services bid on at the price(s) stated and in accordance with the conditions of said accepted bid; and the Owner on its part to pay for, at the agreed prices, all services specified and delivered in accordance with the Contract documents.

15.5 All prices and notations must be in ink or typewritten. No erasures permitted. Mistakes may be crossed out and corrections made in ink adjacent and must be initialed and dated in ink by person signing bids. Bids must show a lump sum total price as set forth in Section 29.0 In case of error in the extension of prices, the lump sum total price shall govern.

15.6 All bids must be signed with the firm name and be signed by an officer or authorized employee of the firm. In the case of a corporation, the title of the officer signing must be stated and each officer must be duly authorized. In the case of a partnership, the signature of at least one of the partners must follow the firm name using the term "member of the firm" or "general partner". In the case of a limited liability company, the bid must be signed by the manager (if any) or by a member.

15.7 Verify your bids before submission as they cannot be withdrawn or corrected after being opened.

15.8 If you do not bid, return this sheet and state reason. Otherwise your name may be removed from our mailing list.

15.9 The time of completion of the project is stated in definite terms in Section 32.0. If the time of completion and/or delivery for different commodities varies, the bidder shall so state.

15.10 The Owner reserves the right to reject any and all bids in whole or in part, and to waive any informality or technical defects if, in its judgment, the best interests of the Owner will be served.

15.11 Any equipment delivered must be standard new equipment latest model, except as otherwise specifically stated in bid. Where any part or nominal appurtenances of equipment is not described, it shall be understood that all the equipment and appurtenances which are usually provided in the manufacturer's stock model shall be furnished.

15.12 Bidder declares that the bid is not made in connection with any other bidder submitting a bid for the same commodity or commodities, and that the bid is bona fide and is in all respects fair and without collusion or fraud.

15.13 Samples, when requested, must be furnished free of expense, and if not destroyed will, upon request, be returned at the bidder’s risk and expense.

15.14 Length of time for completion / delivery as well as price may be considered in awarding of the bid.

16.0 BID SECURITY:

Bids shall be accompanied by a bid guarantee of not less than Five Percent (5%) of the bid, which may be a Bid Bond, a Certified Check, or Cashier's Check, made payable to Deborah Robinson, Treasurer, York County, Virginia. Such Bid Bond or check shall be submitted with the understanding that it shall guarantee that the Bidder will not withdraw his bid for a period of

sixty (60) days; and, that if his bid is accepted, he will enter into a formal contract with the Owner, and the required bonds will be given.

17.0 SILENCE OF SPECIFICATIONS:

The apparent silence of these specifications and any supplemental specifications as to any detail or the omission from the specifications or scope of work of a detailed description concerning any point shall be regarded as meaning that only the best commercial practices are to prevail and that only materials of the highest quality and correct type, size and design are to be used. All interpretation of these specifications and scope of work shall be made on the basis of this statement.

18.0 WORK SITE DAMAGES / REPLACEMENT OF DAMAGED PROPERTY:

The Contractor shall replace or repair any property damaged by Contractor, subcontractor(s), or their employees and / or agents, including but not limited to any damages to finished surfaces, existing structures, fences, trees, plants, grass, walks, drives, and building surfaces, without limitation. Contractor shall restore to its original condition any real or personal property, equipment or material whether that of the Owner's or belonging to a private party, that is damaged as a result of work associated with this Project. All such repairs and / or replacements shall be to the Owner's satisfaction, at no cost to the Owner, and the Contractor's sole expense.

19.0 TRADE NAMES AND ALTERNATIVES

All materials specified have been determined to have characteristics appropriate for the purposes of this Project. When the drawings or specifications specify one or more manufacturers' brand names or makes of materials, devices or equipment as indicating a quality, style, appearance or performance, the bidder shall base his bid on either one of the specified brands. Unless the clause "or equal" is used in the specifications or scope of work pertaining to the material or article, only the specified items shall be used. In the event, however, that the clause "or equal" is used in the specifications pertaining to the material or article, the proposed use of alternate article other than that specified must be approved by the Owner. Use of an alternate shall not be permitted unless it has been found to be equal or better by the Owner and at no additional cost.

The burden of proof as to the comparative quality and suitability of alternative equipment, articles or materials shall be upon the bidder and he shall furnish at his own expense, such information relating thereto as may be required by the Owner. The Owner shall be the sole judge as to the comparative quality and suitability of alternative equipment, articles or materials and his decisions shall be final and unreviewable.

Requests for approval of alternate products shall be submitted in writing to the Central Purchasing Office a minimum of seven (7) calendar days prior to the due date and time of the bids and shall include manufacturers samples(s). Consideration will be given to bids submitted on alternate commodities to the extent that such action is deemed to serve best the interests of the Owner. If the bidder does not indicate that the commodity he proposes to furnish is other than specified, it will be construed to mean that the bidder proposes to furnish the exact commodity described.

Substitution of equipment, articles or materials for specified items or approved alternates after bid opening may not be made without the prior written approval of the Owner.

20.0 AWARD AND EXECUTION OF CONTRACT:

20.1 Award of Contract:
The contract will be awarded or the bids rejected as soon as reasonably possible, but not later than sixty (60) days after the date of opening bids, unless the period for acceptance is otherwise extended at request of Owner and agreed to in writing by the bidder, or bidders.

20.2 Form of Contract:
An example of the proposed contract format is enclosed. Both parties shall execute a similar contract prior to approval by the County Attorney.

Copies of the required Payment and Performance Bonds are also attached.

20.3 Entering Contract:
Upon award of the Contract to a bidder, such bidder shall enter into the Contract by signing the Contract and by furnishing the Bond(s) for faithful performance as prescribed herein and the Certificate of Insurance with endorsement as specified, which are required to be procured by the Contractor within ten (10) calendar days after the date of the award or within such further time as the owner may allow. Samples of all documents referred to except the Certificate of Insurance, are attached hereto.

No contract shall result from the submission of any bid and no liability shall accrue with respect thereto until a written contract and accompanying documents have been fully and completely executed on the part of the successful bidder and the Owner. However, failure by the successful bidder to enter into a written contract shall cause the successful bidder to forfeit the full amount of the bid guarantee to the Owner.

20.4 Execution of Documents:
All documents which the bidder is required to execute shall carry the signature of the president of the corporation, the corporate seal and shall be attested to by the secretary of the corporation provided, however, if the board of directors of a corporation authorizes another officer to act for the corporation, then a sealed and attested copy of such authorization shall accompany the signature of such other officer. In the case of an individual, the individual to be bound shall sign; and in the case of a partnership, the signature of a partner shall bind the partnership; and in the event of a limited liability company, a member (or the manager, if any) shall sign.

21.0 NEGOTIATION WITH LOWEST RESPONSIBLE BIDDER:
Unless canceled or rejected, a responsive bid from the lowest responsible bidder shall be accepted as submitted, except that if the bid from the lowest responsible bidder exceeds available funds the Purchasing Agent reserves the right to negotiate with the apparent low bidder to obtain a mutually agreeable contract price. The negotiations shall be confined to a reduction in the contract price and shall address changes in the contract requirements.

22.0 INVOICING/PAYMENTS TO THE CONTRACTOR:
Billings to the Owner shall be by issuance of a Certificate for Payment by the Architect in accordance with AIA Document A201-1997, as modified herein, and shall reference the purchase order number. Upon issuance of a Certificate for Payment by the Architect, and acceptance of same by the Owner, the Owner shall issue payment based on the Certificate for payment, and as approved by the Owner, to the Contractor within thirty (30) days after receipt of the Certificate of Payment.

23.0 GUARANTEE:
All materials and equipment furnished by the Contractor and all work involved in this Contract shall be and the same are hereby guaranteed by the Contractor free from defects owing to faulty materials or workmanship for a period of 2 years after date of substantial completion of work. All such materials and equipment, furnished by the Contractor, and all work involved in this Contract which proves defective, by reason of faulty material or workmanship within said period of 2 years, shall be replaced by the Contractor free of cost to the Owner.

Nothing herein shall be deemed a waiver of Owner to seek any available legal or equitable remedy, A waiver by Owner of any other available remedy for Contract default, a waiver by Owner to seek any available remedy provided by any applicable warranty, a waiver of any applicable statue of limitations period, or a waiver of any other applicable warranty period.

24.0 SUPPLEMENTAL CONDITIONS:
The following Supplemental Conditions modify the "General Conditions of the Contract for Construction", AIA Document A201 - 1997. Where a portion of the General Conditions is modified or deleted by these Supplemental Conditions, the unaltered portions of the General Conditions shall remain in full force and effect, but subject to modification by IFB 1910.

SUPPLEMENTAL CONDITIONS

ARTICLE 1; GENERAL PROVISIONS

1.2 CORRELATION AND INTENT OF THE CONTRACT DOCUMENTS

Add to 1.2. the following Clause 1.2.3.1:

1.2.3.1 “Where on any drawings a portion of the Work is drawn out and the remainder is indicated in outline, the parts drawn out shall apply also to all other work. Where details or conditions are indicated but started only, such details, or conditions shall be continued throughout the course or parts in which they occur and shall also apply to all other similar parts of the Work unless otherwise indicated or specifically noted. On all Drawings, figures shall take precedence over measurements by scale, and scaling is done at the Contractors own risk.”

1.5 EXECUTION OF CONTRACT DOCUMENTS

Delete subparagraph 1.5.2 in its entirety and substitute the following:

1.5.2 "By the signing and delivery of this Contract, the Contractor acknowledges that he has fully acquainted himself with all provisions and requirements of the Contract Documents, that he has visited and inspected the job site and building area in which the work is to be performed, that he has satisfied himself as to the nature and location of the Work, including any obstructions, amount of work, the general and local conditions, actual levels, the equipment and facilities needed preliminary to and during the prosecution of the Work and all other matters which can in any way affect the Work or the cost thereof under this Contract. Any failure by the Contractor to acquaint himself with such information will not relieve him from the responsibility for successfully performing the Work. There shall be no claim allowed for additional compensation to Contractor based upon unanticipated or additional work unless Contractor can show to Owner's sole satisfaction that such unanticipated or additional work could not have been discovered by reasonable means prior to the bid."

ARTICLE 2; OWNER

2.1. GENERAL

Delete Subparagraph 2.1.2 in its entirety.

2.2 INFORMATION AND SERVICES REQUIRED OF THE OWNER

Delete Subparagraph 2.2.1 in its entirety.

2.2.3 Add a new last sentence: "The Owner has endeavored to ascertain all pertinent information regarding site conditions and have, to the best of its ability furnished all such information to the Contractor. Such information is given, however, as being the best factual information available to the Owner, but is advisory only."

Delete subparagraph 2.2.5 in its entirety and substitute the following:

2.2.5 "The Contractor will be furnished, free of charge ten (10) copies of the drawings. Additional sets will be furnished at the cost of reproduction, postage and handling."

2.4 OWNER'S RIGHT TO CARRY OUT THE WORK

Delete subparagraph 2.4.1 in its entirety and substitute the following:

2.4.1 "If the Contractor defaults or neglects to carry out the Work in accordance with the Contract Documents and fails within a seven-day period after receipt of a written notice from the Owner to commence and continue correction of such default or neglect with diligence and promptness, the Owner may, without prejudice to other remedies the owner may have, correct such deficiencies. In such case, an appropriate Change Order shall be issued deducting from

payments then or thereafter due the Contractor the cost of correcting such deficiencies, including Owner's expenses and compensation for the Architect's additional services made necessary by such default, neglect or failure. If payments then or thereafter due the Contractor are not sufficient to cover such amounts, the Contractor shall pay the difference to the Owner."

ARTICLE 3; CONTRACTOR

3.7 PERMITS, FEES AND NOTICES

3.7.1 Add a new last sentence: "However, the County of York has agreed to waive payment of those fees imposed by the County of York, Virginia."

Delete subparagraph 3.7.2 in its entirety and substitute the following:

3.7.2 "All work shall comply with all applicable federal, state and local regulations, codes and ordinances, as well as any other authorities that may have lawful jurisdiction pertaining to the work specified. None of the terms or provision of this specification shall be construed as waiving any other rules, regulations or requirements of these authorities. The Contractor shall keep himself fully informed of any County regulation and all state and federal laws which in any manner effect the work herein specified. In any instance where these specifications or scope of work call for materials for construction of a better quality or larger size than required by the codes, the provision of the specifications and scope of work shall take precedence. Conversely, should the codes call for better quality or larger size, the codes shall govern."

Add a new subparagraph 3.7.5 as follows:

3.7.5 "The Owner will pay all permit and connection fees required for the work but the Contractor shall be responsible for securing same."

3.9 SUPERINTENDENT

Delete subparagraph 3.9.1 in its entirety and substitute the following:

3.9.1 "The Contractor shall assign a project manager to the work and have a competent superintendent or foreman satisfactory to the Owner on the work site at all times during progress of the work. The superintendent or foreman shall represent the Contractor and communications given to the superintendent or foreman shall be as binding as if given to the Contractor. Important communications shall be confirmed in writing.

The Owner reserves the right to suspend the work until such time as a competent foreman or superintendent satisfactory to the Owner is assigned to the project. Contract time shall not be extended for such suspension nor shall the Contractor be entitled to any additional payment of any kind whatsoever as a result of such suspended work."

3.10 CONTRACTOR'S CONSTRUCTION SCHEDULES

Add the following subparagraph 3.10.4:

3.10.4 "The Contractor shall submit an updated construction schedule monthly with his application for payment. The revised schedule will demonstrate a strategy for overcoming any variances in the previous month's schedule in order to complete the project on time. Pay requests will not be reviewed unless accompanied by the updated schedule."

3.12 SHOP DRAWINGS, PRODUCT DATA AND SAMPLES

Amend subparagraph 3.12.5 by adding new sub-paragraphs 3.12.5.1 and 3.12.5.2, as follows:

3.12.5.1 "Any Drawings, Schedules, and Catalog Data submitted without the Contractor's stamp of approval will not be considered by the Architect and will be returned to the Contractor."

3.12.5.2 "The Contractor shall be responsible for the satisfactory construction of all Work in accordance with the quantities, dimensions, and designs shown in the Contract documents and the furnishing of all materials necessary for the Work and required by the Contract Documents even if not indicated on the submittals that have been approved by the Architect."

Amend subparagraph 3.12.8 by adding the following to the end of the paragraph:

"Failure to so notify the Architect in writing of such deviations shall constitute just cause for rejection of samples and Shop Drawings, including all finished work resulting therefrom, at any time during the construction and up through the prescribed guarantee period. The Architect's approval of samples and Shop Drawings is made with the understanding that such Shop Drawings and samples conform with, and do not deviate from the Contract Documents unless Architect is so informed in writing at the time of submittal thereof."

3.14 CUTTING AND PATCHING

Add to 3.14 the following subparagraph 3.14.3:

3.14.3 "No cutouts, access doors or mechanical or electrical conduit or devices of any sort shall be installed in finished materials or areas other than in mechanical rooms, wall chases and shafts without specified prior approval of location, and without the prior submittal by Contractor to Owner of a sample of the proposed catalog cut. "

3.15 CLEANING UP

Delete subparagraph 3.15.1 and substitute the following:

3.15.1 "For the performance of the contract, the Contractor will be permitted to occupy such portions of the site as shown on the plans, or as permitted by Owner or his representative. A reasonable amount of tools, materials or equipment for construction purposes may be stored in such place, but not more than is necessary to avoid delays in construction. Excavated and waste materials, if any, shall be piled or stocked in such a way as to not interfere with spaces that may

be designated to be left free and unobstructed, not to inconvenience other contractors or the Owner.

Upon completion of the work and before acceptance and final payment is made, the Contractor shall clean and remove from the site of work, surplus and discarded materials, temporary structures, the Contractor's tools, construction equipment, machinery, surplus materials and debris of every kind. Contractor shall leave the site of work in a neat and orderly condition equal to that which originally existed. Surplus and waste materials removed from the site of the work will be disposed of at a location satisfactory to the Owner."

3.16 ACCESS TO WORK

Add to 3.16. the following clause 3.16.2:

3.16.2 "The Owner and Architect shall have access to the Work at all times. The Contractor shall keep the Architect advised of the progress of the Project and shall provide opportunity for the Owner or his representative and the Architect to inspect each phase of the Work. The Contractor shall provide proper and safe facilities for such access and for inspection."

3.17 ROYALTIES, PATENTS AND COPYRIGHTS

Delete subparagraph 3.17.1 and substitute the following:

3.17.1 "The Contractor shall pay all royalties and license fees. The Contractor guarantees to save the Owner, its officers, agents and employees, harmless from liability of any nature or kind for use of any copyrighted or uncopyrighted composition, secret process, patented or unpatented invention, articles or appliances furnished or used in the performance of the contract or of which the Contractor is not the patentee, assignee or licensee and shall defend all such suits or claims. Contractor shall not be responsible for such defense or loss when a particular design, process or product of a particular manufacturer or manufacturers is required by the Contract Documents or where the copyright violations are contained in Drawings, Specifications or other documents prepared by the Owner or Architect. However, if the Contractor has reason to believe that the required design, process or product is an infringement of a copyright or a patent, the Contractor shall be responsible for such loss unless such information is promptly furnished to the Architect.

This subparagraph 3.17.1 shall be deemed to be incorporated into any contract awarded as a consequence of this bid."

3.18 INDEMNIFICATION

Delete subparagraph 3.18.1 and substitute the following:

3.18.1 "Contractor and all subcontractors shall bear all loss, expense (including reasonable attorney's fees) and damage from any cause whatsoever arising out of, incidental to, or in connection with the performance of the contract and shall indemnify Owner, its agents, officers and employees against and save Owner, its agents, officers and employees harmless from all

claims, demands, and judgments made or recovered against Owner because of bodily injuries, including death, at any time resulting therefrom, and/or because of damage to property, from any cause whatsoever, arising out of, incidental to, or in connection with the performance of the contract whether or not due to any act of its or their employees, servants or agents and whether or not due to any act of omission or commission, including negligence, but excluding sole negligence of Owner, its agents, officers and employees. Compliance by the Contractor with the insurance provision hereof shall not relieve Contractor from liability under this provision.

Should Contractor, its employees, servants or agents and any subcontractors use any of Owner's equipment, tools, employees, or facilities, such will be gratuitous and Contractor and subcontractors shall release Owner its agents, officers and employees from and indemnify and save Owner, its agents, officers and employees harmless from and against any claims for personal injuries, including death, arising out of the use of any such equipment, tools, employees, or facilities, whether or not based upon the condition thereof or any alleged negligence of Owner in permitting the use thereof.

The Contractor, its employees, servants or agents and any subcontractors guarantees to save the Owner, its agents, officers or employees, harmless from liability of any nature or kind, for use of any copyrighted or uncopyrighted composition, secret process, patented or unpatented invention, articles or appliances furnished or used in the performance of the contract, or which the Contractor is not the patentee, assignee or licensee.

This subparagraph 3.18.1 shall be deemed to be incorporated into any contract awarded as a consequence of this bid.

ARTICLE 4; ADMINISTRATION OF THE CONTRACT

4.1 ARCHITECT

Add to 4.1.1 the following clause 4.1.1.1:

4.1.1.1 "Wherever the term "Architect" is used in the Contract Documents, it refers to Hudson + Associates Architects, PLLC and/or their duly authorized representatives."

Delete Subparagraphs 4.1.2 and 4.1.3.

4.2 ARCHITECT'S ADMINISTRATION OF THE CONTRACT

Delete subparagraph 4.2.12 and substitute the following:

4.2.12 "Interpretations and decisions of the Architect will be consistent with the intent of, and reasonably inferable from, the Contract Documents and will be in writing or in the form of drawings. When making such interpretations and decisions, the Architect will endeavor to secure faithful performance by both Owner and Contractor."

4.3 CLAIMS AND DISPUTES

Delete Subparagraph 4.3.1 and substitute the following:

4.3.1 "Definition. A claim is a demand or assertion by one of the parties seeking, as a matter of right, adjustment or interpretation of the Contract Documents, payment of money, extension of time or other relief with respect to the terms of the Contract. The term "Claim" includes other disputes and matters in question between the Owner and Contractor arising out of or relating to the Contract but specifically does not include any Claim or demand arising for the first time after final payment is made. Claims must be made by written notice. The responsibility to substantiate claims shall rest with the party making the claim."

Delete Subparagraph 4.3.2 and substitute the following:

4.3.2 "TIME LIMIT ON CLAIMS.
a. Notice. Notice of a claim by either party must be given to the other party within thirty (30) calendar days after occurrence of the event giving rise to such Claim or within thirty (30) days after the Claimant should reasonably have known of the condition giving rise to the Claim, whichever is later. Notice of claim must be made by written notice. Failure to make claims within the time period specified in this subparagraph shall be deemed a waiver of the claim.
b. Documentation. Supporting documentation of the claim shall be submitted within sixty (60) calendar days of the event on which the claim is based. Failure to submit supporting documentation within sixty (60) days bars further pursuit of the claim.
c. Additional claim. An additional claim made after the initial claim had been implemented by change order will not be considered unless submitted in a timely manner."

4.3.7 CLAIMS FOR ADDITIONAL TIME.

Add the following to the end of subparagraph 4.3.7.1:

"Requests for extension of time based on delayed deliveries of materials will not be considered, except in Owner's sole and unreviewable discretion. Submission of a bid and the time of completion stated thereon shall be considered confirmation of Contractor's having verified delivery dates for required materials."

4.3.8 INJURY OR DAMAGE TO PERSONS OR PROPERTY

Delete subparagraph 4.3.8

4.4 RESOLUTION OF CLAIMS AND DISPUTES

Amend Subparagraph 4.4.4 by adding the following language at the end, as follows:

"If there is a surety and there appears to be a possibility of a Contractor's default, the Architect may, but is not obligated to, notify the surety and request the surety's assistance in resolving the controversy. "

Delete Subparagraph 4.4.5 and substitute the following:

4.4.5 "The Architect will approve or reject Claims by written decision, which shall state the reasons therefore and which shall notify the parties of any change in the Contract Sum or Contract Time or both. The approval or rejection of a Claim by the Architect shall be final and binding on the parties unless a Claim is submitted pursuant to Subsection 4.4.9 herein."

Delete subparagraph 4.4.6 in its entirety.

Add a new subparagraph 4.4.9 as follows:

4.4.9 "Any controversy or Claim by Owner or Contractor arising out of or related to the Contract, or the breach thereof, except for Claims which have been waived by the making and acceptance of final payment as provided in the Contract documents, may be submitted for review to the County School Board of York County, Virginia pursuant to the terms of Section 15.2-1243, et. seq. of the Code of Virginia (applied to the School Board *mutatis mutandis*) within ten (10) days of the date of the Architect's written decision issued pursuant to Subparagraph 4.4.5. Failure to file a Claim as provided for in this subparagraph within ten (10) days of the date of the Architect's decision, shall be deemed a waiver of further review of the Claim."

4.5 MEDIATION

Delete Paragraph 4.5 and all Subparagraphs thereof in their entirety.

4.6 ARBITRATION

Delete paragraph 4.6 and all Subparagraphs thereof in their entirety.

ARTICLE 5; SUBCONTRACTORS

5.2 AWARD OF SUBCONTRACTS AND OTHER CONTRACTS FOR PORTIONS OF WORK

Add the following Subparagraph 5.2.5:

5.2.5 "The Owner may revoke approval of any subcontractor only for good cause. Notice of such revocation of approval will be given in writing to the Contractor by the Owner and all work by said subcontractor shall immediately cease."

Add the following Subparagraph 5.2.6

5.2.6 "Contractor shall provide a statement in writing from each subcontractor that such subcontractor waives all rights to assert any claims, actual and/or consequential, against the Owner allegedly arising from or growing out of any delays in the work schedule or any failure

of the Contractor to pay such subcontractor any sums owed by the Contractor to such subcontractor."

5.4 CONTINGENT ASSIGNMENT OF SUBCONTRACTS

Delete Subparagraph 5.4.2 in its entirety.

ARTICLE 6; CONSTRUCTION BY OWNER OR BY SEPARATE CONTRACTORS

6.2 MUTUAL RESPONSIBILITY

Add the following subparagraph 6.2.6:

6.2.6 "If any other Contractor or his subcontractors or their material suppliers shall suffer loss or damage through acts of omissions on the part of the Contractor, any subcontractor, and sub-subcontractor or any material man of any of the foregoing, the Contractor agrees to reimburse such other Contractor or his sub-contractor or material supplier to the extent that they may be entitled to reimbursement. If such other Contractor or subcontractor or his material supplier shall assert any claim against the Owner on account of any damage alleged to have been sustained, the Owner shall notify the Contractor and the Contractor shall indemnify and save the Owner harmless from and against loss, liability, claim, damage, fee, expense, including reasonable attorney's fees of any kind whatsoever arising out of or in any way connected with any such claim and Contractor shall defend at his own expense any suit in connection with any such claim, and if a judgment shall be rendered against the Owner in connection with any such claim, Contractor shall pay or satisfy any such judgment or claim and shall pay all costs, fees, expenses, disbursements and liabilities of whatsoever kind in connection therewith."

ARTICLE 7; CHANGES IN THE WORK

7.2 CHANGE ORDERS

Add the following Subparagraph 7.2.3

7.2.3 "Before any work under this Agreement shall qualify as additional work and made part of a change order, the Contractor shall notify the Owner and Architect in writing of his intention to treat certain work, if performed, as additional work and his reasons therefore. If written notice is not given, no claim for additional work will be honored. Notice by Contractor shall not be construed as proving the validity of the claim."

Add the following Subparagraph 7.2.4

7.2.4 "Upon agreement that a change order is necessary by the Owner, Architect and Contractor, the parties will execute a written change order specifying the scope of work and the schedule for both work and additional payment, if any, agreed to by the parties. No oral agreement or directive regarding additional work or a change in terms of the Agreement by an employee of the Owner shall be binding on Owner."

7.3 CONSTRUCTION CHANGE DIRECTIVES

7.3.6 In the first sentence, delete the words "a reasonable allowance for overhead and profit" and substitute "an allowance for overhead and profit in accordance with Clause 7.3.10.1 through 7.3.10.6 below."

Add the following Subparagraph 7.3.10:

7.3.10 " In Subparagraph 7.3.6, the allowance for the combined overhead and profit included in the total cost to the Owner shall be based on the following schedule:

.1 For the Contractor, for Work performed by the Contractor's own forces, ten percent (10%) of the cost.

.2 For the Contractor, for Work performed by the Contractor's Subcontractor, five percent (5%) of the amount due the Subcontractor.

.3 For each Subcontractor or Sub-subcontractor involved, for Work performed by the Subcontractor's or Sub-subcontractor's own forces, ten percent (10%) of the cost.

.4 For each Subcontractor, for Work performed by the Subcontractor's Sub-subcontractors, five percent (5%) of the amount due the Sub-subcontractor.

.5 Cost to which overhead and profit is to be applied shall be determined in accordance with Subparagraph 7.3.6.

.6 In order to facilitate checking of quotations for extras or credits, all proposals, except those so minor that their propriety can be seen by inspection, shall be accompanied by a complete itemization of costs including labor, materials and Subcontracts. Labor and materials shall be itemized in the manner prescribed above. Where major cost items are Subcontracts, they shall be itemized also. In no case will a change involving over $500.00 be approved without such itemization."

ARTICLE 9; PAYMENTS AND COMPLETION

9.3 APPLICATIONS FOR PAYMENT

Add the following clause 9.3.1.3 to 9.3.1:

9.3.1.3 "Until substantial completion, the Owner shall pay no more than ninety-five percent (95%) of the amount due the Contractor on account of progress payments."

Add the following Subparagraph 9.3.4

9.3.4 "All material and work covered by partial payments that thereafter becomes the sole property of Owner shall not be construed to relieve the Contractor from the sole responsibility for the safety and protection of all materials and work upon which payments have been made or the Contractor's responsibility of restoration or replacement of any damaged or stolen work or property or as a waiver of the right of the Owner to require the fulfillment of all the terms of the Contract Documents."

9.7 FAILURE OF PAYMENT

Delete subparagraph 9.7.1

9.8 SUBSTANTIAL COMPLETION

Amend subparagraph 9.8.4 by adding the following:

"Nothing herein shall authorize the Architect to extend the date for final completion of the Work except as authorized in Article 7."

9.10 FINAL COMPLETION AND FINAL PAYMENT

Add the following to Subparagraph 9.10.2:

9.10.2 "(6) a record set of as-built drawings and specifications or manual. "

Add the following Subparagraph 9.10.2.1

9.10.2.1 "Within thirty (30) days after issuance of the final Certificate for Payment, upon acceptance of same by the Owner, and upon Contractor's compliance with the terms of Subparagraph 9.10.2 the Owner shall make final payment to the Contractor pursuant to Paragraph 9.10."

Delete Subparagraph 9.10.3

Delete Subparagraph 9.10.5 and substitute the following:

9.10.5 "Acceptance of final payment by the Contractor or sub-contractor or material supplier shall constitute a waiver and release of all Claims by that payee except those previously made in writing and pursued by the payee as required by the terms of the Contract Documents. Such Claims previously made must be identified by the payee as unsettled at the time of final application for payment."

Add Subparagraph 9.10.6 as follows:

9.10.6 "Contractor's obligation to perform the work and complete the project in accordance with the Contract Documents shall be absolute. Neither approval of any progress or final payment nor the issuance of a certificate of substantial completion, nor any payment by Owner to

Contractor under the Contract Documents, nor any use or occupancy of the project or any part thereof by Owner, nor any act of acceptance by Owner, nor any failure to do so, nor the failure of Owner to file a Claim as set forth in the Contract Documents, nor any correction of defective work by Owner, shall constitute an acceptance of work not in accordance with the Contract Documents nor shall the same relieve the Contractor of responsibility for faulty materials or workmanship or operate to release the Contractor or his surety from any obligation under the contract, the performance bond or the payment bond."

Add the following Subparagraph 9.10.7

9.10.7 "No Certificate for Payment issued by the Architect and no payment, final or otherwise, nor partial or entire use or occupancy of the Work by the Owner shall be an acceptance of any work or materials not in accordance with the Contract Documents nor shall the same relieve the Contractor of responsibility for faulty materials or workmanship or operate to release the Contractor or his Surety from any obligation under the Contract or the Performance and Payment Bonds. Any dispute of the Final Payment by the Contractor shall be resolved as a claim against the Owner and processed pursuant to Virginia Code Section 15.2-1243 et seq. and 22.1-122 applied to the Owner *mutatis mutandis*."

Add the following Paragraph 9.11 as follows:

9.11 LIQUIDATED DAMAGES

9.11.1 "Because time is of the essence and because the consequences of untimely completion of the Work cannot be quantified as of the date of this Agreement, the parties agree that the Contractor and the Contractor's surety, if any, shall be liable for and shall pay the Owner the sums hereinafter stipulated as liquidated damages, and not as a penalty, for each calendar day of delay until the Work is substantially complete Two Hundred U.S. Dollars ($200.00), and for each calendar day of delay until the Work is finally complete an additional Two Hundred U.S. Dollars ($200.00) for a possible total of Four Hundred U. S. Dollars ($400.00) per calendar day of delay, and Contractor further agrees that Owner may deduct and retain such liquidated damages out of any money due Contractor under the terms of this Contract."

ARTICLE 10; PROTECTION OF PERSONS AND PROPERTY

10.2 SAFETY OF PERSONS AND PROPERTY

Add to 10.2.1 the following paragraph 10.2.1.4:

10.2.1.4 "Contractor's materials, tools, machinery, equipment, appliances, shoring, sheds and personal property of the Contractor's employees."

Add to 10.2.2 the following clause 10.2.2.1:

10.2.2.1 “The Contractor agrees in order that work be executed with the greater degree of safety:

(1) To comply with all laws, ordinances, and regulations regarding safety.

(2) To comply as applicable with the "Rules and Regulations Governing Construction Demolition and All Excavations" as adopted by the Safety Codes Commission of the Commonwealth of Virginia.

(3) To conform to all applicable provisions of the "Manual of Accident Prevention in Construction" published by the Association of General Contractor of America, Inc., latest edition.

(4) To comply with all applicable provisions of the "Occupational Safety and Health Act of 1970," as amended.”

In subparagraph 10.2.5 delete the language within the parentheses.

Add the following Subparagraph 10.2.8 as follows:

10.2.8 “The Contractor shall to the greatest extent practicable secure the Work against weather, providing coverage or other protection of the Work against damage by wind or rain or other weather events. In the event Contractor shall fail to provide such protection, Contractor shall be obligated to correct or remediate all damages to the Work, and to any other structure or property of which the Work is a part or is affixed to the satisfaction of the Owner, by reason of (without limitation) inundation by water, damage from wind, or any damage resulting therefrom including without limitation the growth of mold as a result of exposure of the Work or any portions thereof to the elements. “

10.3 HAZARDOUS MATERIALS

Delete Subparagraph 10.3.2 in its entirety and in its place substitute the following:

10.3.2 “The Owner shall verify the presence or absence of the material or substances reported by the Contractor and, in the event such material or substance is found to be present, verify that it has been rendered harmless. When the material or substance has been rendered harmless, Work in the affected area shall resume upon written agreement of the Owner and Contractor. The Contract Time shall be extended appropriately and the Contract Sum shall be increased in the amount of the Contractor’s reasonable additional costs of shut-down, delay and start-up.”

Delete subparagraph 10.3.3 in its entirety.

Delete subparagraph 10.5 in its entirety.

ARTICLE 11; INSURANCE AND BONDS

11.1 CONTRACTOR'S LIABILITY INSURANCE
Add new subparagraphs 11.1.1.9 and 11.1.1.10, as follows:

11.1.1.9 Liability Insurance shall include all major divisions of coverage and be on a comprehensive basis including:

1. Premises Operations (including X, C, and U coverage as applicable).

2. Independent Contractor's Protective

3. Products and Completed Operations

4. Personal Injury Liability with Employment Exclusion deleted.

5. Contractual, including specified provision for Contractor's obligation under Paragraph 3.18.

6. Owned, non-owned and hired motor vehicles.

7. Broad Form Property Damage including Completed Operations."

11.1.1.10 "If the General Liability coverages are provided by a Commercial General Liability Policy on a claims-made basis, the policy date or Retroactive Date shall predate the Contract; the termination date of the policy or applicable extended reporting period shall be no earlier than the termination date of coverages required to be maintained after final payment, certified in accordance with Subparagraph 9.10.2."

Add the following Clause 11.1.2.1:

11.1.2.1 "The insurance required by Subparagraph 11.1.1 shall be written for not less that the following limits, or greater if required by law:

1. Worker's Compensation

(a) State: Statutory

(b) Applicable Federal (e.g., Longshoreman's) Statutory

(c) Employer's Liability: $100,000 per Accident

$100,000 Disease, Policy Limit

$500,000 Disease, Each Employee

2. Comprehensive or Commercial General Liability (including Premises Operations; Independent Contractor's Protective; Products and Completed Operations; Broad Form Property Damage):

(a) Bodily Injury:
$1,000,000 Each Occurrence
$1,000,000 Aggregate

(b) Property Damage:
$1,000,000 Each Occurrence
$1,000,000 Aggregate

(c) Products and Completed Operations to be maintained in full effect for one year after the date of final acceptance of the project by the Owner

$1,000,000 Aggregate

(d) Property Damage Liability Insurance shall provide X, C, and U coverage

(e) Broad Form Property Damage Coverage shall include Completed Operations.

3. Contractual Liability:

(a) Bodily Injury:

$1,000,000 Each Occurrence
$1,000,000 Aggregate

4. Personal Injury, with Employment Exclusion deleted:

$1,000,000 Aggregate

5. Business Auto Liability (including owned, non-owned and hired vehicles):

(a) Bodily Injury:

$1,000,000 Each Person
$1,000,000 Each Occurrence

(b) Property Damage:

$1,000,000 Each Occurrence

6. Umbrella Excess Liability:

$5,000,000 over primary insurance, Each Occurrence

$5,000,000 over primary insurance, Aggregate
$10,000 retention for self-insured hazards each occurrence."

11.1.3 Add the following sentence to Subparagraph 11.1.3:

"If this insurance is written on the Comprehensive General Liability policy form, the Certificates shall be AIA Document G705, Certificate of Insurance. If this insurance is written on a Commercial General Liability policy form, ACORD form 25S will be acceptable. The Contractor shall deliver certificates of insurance from carriers acceptable to the Owner specifying such limits, along with a proper endorsement naming the "County School Board of York County, Virginia, its Officers, Agents and Employees" as Additional Insured, with primary status, without participation from the Board's insurers" on applicable policy(s). The provisions of this paragraph shall be deemed included in the contract as if fully set out therein.

Further, the successful Contractor agrees they shall immediately notify, in writing, the Owner of any changes, modifications, and/or termination of any insurance coverages and/or policies required by the resulting contract."

11.2 OWNER'S LIABILITY INSURANCE

Delete subparagraph 11.2.1 in its entirety.

11.4 PROPERTY INSURANCE
Delete subparagraphs 11.4.1, 11.4.1.1, 11.4.1.2, 11.4.1.3, and 11.4.1.4, and substitute the following:

11.4.1 "Contractor or builder's risk insurance in the all-risk form shall be provided by the Contractor in a minimum amount of 100 per cent (100 %) of the Contract Sum covering damage to or loss of work performed under the Contract caused by fire, water, explosion, wind, lightening, vandalism, malicious mischief and any other similar casualty risk or peril. The insurance shall be payable to the Owner and the Contractor as their respective interests may appear. The Owner shall be named as an additional insured on the insurance policy and Contractor shall provide the certificate of insurance from a carrier acceptable to the Owner specifying such limit, along with the proper endorsement naming the "County School Board of York County, Virginia, its Officers, Agents and Employees" as Additional Insured, with primary status, without participation from the Board's insurers" in the insurance contract. Such insurance shall cover portions of the Work stored off site, and also portions of the Work in transit."

Delete Subparagraphs 11.4.2, 11.4.3, 11.4.4, 11.4.5, 11.4.6, 11.4.7, 11.4.8, 11.4.9 and 11.4.10.

11.5 PERFORMANCE BOND AND PAYMENT BOND

Delete Subparagraph 11.5.1 and substitute the following:

11.5.1 "The Contractor shall furnish bonds covering faithful performance of the Contract and payment of obligations arising thereunder. Bonds shall be in the form specified in the Contract Documents with surety approved by the County Attorney. The cost of all bonds shall be included in the Contract sum. The amount of each bond shall be equal to 100 percent (100%) of the Contract sum. The bonds shall be maintained in full force and effect until final acceptance of the Work by the Owner however the Performance bond shall be in accordance with Sections 11.5.1.3 and 11.5.1.4 below. The Contractor will cause the surety to agree to be bound by each and every provision in the Contract Documents."

11.5.1.1 "The Contractor shall deliver the required bonds to the Owner not later than the date of execution of the Contract or if the work is to be commenced prior thereto in response to a letter of intent, the Contractor shall, prior to the commencement of the work, submit evidence satisfactory to the Owner that such bonds will be furnished."

11.5.1.2 "The Contractor shall require the attorney-in-fact who executes the required bonds on behalf of the surety to affix thereto a certified and current copy of the power of attorney."

11.5.1.3 "Whenever the Contractor shall be declared by Owner to be in default under the Contract, the Owner having performed Owner's obligations thereunder, the Owner shall have the right, at its option, to require the Surety to promptly proceed to remedy the default within thirty (30) days of notice by proceeding or procuring others to proceed with completing the Agreement with its terms and conditions; and all reserves deferred payments and other funds provided by the Agreement to be paid to Contractor shall be paid to Surety at the same times and under the same conditions as by the terms of that Agreement such fund would have been paid to Contractor had the Agreement been performed by the Contractor; and Surety shall be entitled to such funds in preference to any assignee of Principal of any adverse claimant.

The Performance Bond shall require the Surety to give written notice to the Owner, within seven (7) days after receipt of the notice of default by Owner, of the Surety's election either to remedy the default or defaults promptly or to pay the Owner the penal sum of the bond, time being of the essence. In the notice of election, the Surety shall indicate the date on which the remedy or performance will commence, and it shall then be the duty of the surety to give prompt notice in writing to the Owner immediately upon completion of (a) the remedy and/or correction of each default, (b) the remedy and/or correction of each item of Work, (c) the finishing of each omitted item of Work, and (d) the performance of the Work.

Notwithstanding the above, the Owner shall have the right, with the approval of the Surety which shall not be unreasonable withheld, to take over and assume completion of the Contract and Surety shall promptly pay the Owner the penal sum of the bond, such payment to be made at the time of the notice, time being of the essence. The surety shall not assert insolvency of the Contractor or Contractor's denial of default as justification for its failure to promptly remedy the default or defaults or to perform the Work."

11.5.1.4 "The Performance Bond shall also require the Contractor to make good at his own expense, work due to imperfect materials and workmanship for those periods of time as specified in Section 23.0 of IFB 1910 "GUARANTEE" following substantial completion of the

project. The Surety on both bonds shall be a duly authorized Surety Company or Companies satisfactory to the Owner."

ARTICLE 13; MISCELLANEOUS PROVISIONS

13.6 INTEREST

Delete Subparagraph 13.6.1

13.7 COMMENCEMENT OF STATUTORY LIMITATION PERIOD

Delete paragraph 13.7.1 and all subparagraphs thereof, in their entirety.

Add a new paragraph 13.8 as follows:

13.8 "EQUAL OPPORTUNITY

13.8.1 During the performance of this contract, the Contractor shall maintain policies of employment, in conformance with the provisions of the Federal Civil Rights Act of 1964, as amended, as well as the Virginia Fair Employment Act of 1975, as amended, and Section 2.2-4311 of the Virginia Public Procurement Act, as follows:

13.8.1.1 The Contractor will not discriminate against any employee or applicant for employment because of race, religion, color, sex or national origin, age, disability, status as a service disabled veteran, or any other basis prohibited by Virginia law relating to discrimination in employment, except where there is a bona fide occupational qualification reasonably necessary to the normal operation of the Contractor. The Contractor agrees to post in conspicuous places, available to employees and applicants for employment, notices setting forth the provisions of this nondiscrimination clause.

13.8.1.2 The Contractor, in all solicitations or advertisements for employees placed by or on behalf of the Contractor, will state that such Contractor is an equal opportunity employer.

13.8.1.3 Notices, advertisements and solicitations placed in accordance with federal law, rule or regulation shall be deemed sufficient for the purpose of meeting the requirements of this section.

13.8.1.4 During the performance of this contract, the Contractor agrees to (i) provide a drug-free workplace for the Contractor's employees; (ii) post in conspicuous places, available to employees and applicants for employment, a statement notifying employees that the unlawful manufacture, sale, distribution, dispensation, possession, or use of a controlled substance or marijuana is prohibited in the Contractor's workplace and specifying the actions that will be taken against employees for violations of this prohibition; (iii) state in all solicitations or advertisements for employees placed by or on behalf of the Contractor that the Contractor maintains a drug-free workplace; and (iv) include the provisions of the foregoing clauses in

every subcontract or purchase order of over $10,000, so that the provision will be binding upon each subcontractor or vendor.

For the purpose of this subsection, a “drug-free workplace” means a site for the performance of work done in connection with a specific contract awarded to a Contractor in accordance with this subsection, the employees of whom are prohibited from engaging in the unlawful manufacture, sale, distribution, dispensation, possession or use of any controlled substance or marijuana during the performance of the Contract.

13.8.2 The contractor will include the provisions of the foregoing subparagraphs 13.8.1.1, 13.8.1.2, 13.8.1.3 and 13.8.1.4 in every subcontract or purchase order of over $10,000, so that the provisions will be binding upon each subcontractor or vendor.

13.8.3 In accordance with Section 2.2-4343.1 of the Code of Virginia, et. seq., the Owner shall not (i) discriminate against a faith-based organization as defined in the Code of Virginia Section 2.2-4343.1 (B) on the basis of the organization’s religious character or (ii) impose condition that (a) restrict the religious character of the faith-based organization, except as provided in subsection F of Section 2.2-4343.1 of the Code of Virginia, or (b) impair, diminish, or discourage the exercise of religious freedom by the recipients of such goods, services or disbursements.

13.8.4 By signing this Contract, the Contractor certifies that it does not and will not, during the performance of this Contract, violate the provision of the Federal Immigration Reform and Control Act of 1986, as amended, which prohibits employment of illegal aliens.”

ARTICLE 14; TERMINATION OR SUSPENSION OF THE CONTRACT

14.1 TERMINATION OF THE CONTRACTOR

Delete Subparagraph 14.1.1.4

14.2 TERMINATION BY THE OWNER

14.2.2 In the first sentence, delete "upon certification by the Architect that sufficient cause exists to justify such action."

END OF SUPPLEMENTAL CONDITIONS SECTION

25.0 INSURANCE:

The Contractor shall carry insurance in the coverage and amounts specified in ARTICLE 11 of the Supplemental Conditions, above, including the Contractual Liability assumed by the Contractor and prior to the commencement of any work shall deliver certificates of insurance from carriers acceptable to the Owner specifying such limits, along with a proper endorsement naming the "County School Board of York County, Virginia, its Officers, Agents and Employees" as Additional Insured on a primary basis (Form No. GL-20-10) on applicable policy(s) (such additional insured status shall be primary without participation by Owner's insurers). The provisions of this paragraph shall be deemed included in the contract as if fully set out therein.

The successful Contractor shall immediately notify the Owner, in writing, of any changes, modifications, and / or termination of any insurance coverage and /or policies required herein and in the resulting Contract.

26.0 CONTRACTOR REGISTRATION:

If a contract is for seventy thousand dollars ($70,000) or more, of if total value of all construction, removal, repair or improvements undertaken by the bidder within any twelve month period is five hundred thousand dollars ($500,000) or more, the bidder is required under Title 54.1, Code of Virginia (1950), as amended, to be licensed as a "CLASS A CONTRACTOR." If a contract of fifteen hundred dollars ($1,500) or more but less than seventy thousand dollars ($70,000), the bidder is required to be licensed as a "CLASS B CONTRACTOR".

The bidder shall place on the outside of the envelope containing the bid and shall place in the bid over his signature whichever of the following notations is appropriate, inserting his Contractor License Number:

Licensed Class A Virginia Contractor No. _____ Class
Licensed Class B Virginia Contractor No. _____ Class

If the Bidder shall fail to obtain this license prior to submission of his/her bid, the bid shall not be considered.

27.0 SCC REGISTRATION:

If Contractor is organized as a stock or nonstock corporation, a limited liability company, a business trust, or a limited partnership, or is registered as a registered limited liability partnership, Contractor must be authorized to transact business in the Commonwealth as a domestic or foreign business entity if so required by Title 13.1 or Title 50 of the Code of Virginia, or as otherwise required by law. If Contractor allows its existence to lapse, or its certificate of authority or registration to transact business in the Commonwealth of Virginia to expire, or be revoked or cancelled, such will be deemed an act of default enabling Owner to all remedies for default, including but not limited to revocation of this Contract.

28.0 Certifications: In accordance with Virginia Code Section 22.1-296.1, all contractors shall certify that they or any of their employees who will provide services under any resulting contract and who will be in direct contact with York County School Division students:

1) have not been convicted of a felony or any offense involving the sexual molestation or physical or sexual abuse or rape of a child.

For purposes of this requirement, "direct contact with students" means being in the presence of students on school property during regular school hours or during school-sponsored activities.

Any person making a materially false statement regarding any such offense shall be guilty of a Class 1 misdemeanor and, upon conviction, the fact of such conviction shall be grounds for the revocation of the contract to provide such services and, when relevant, the revocation of any license required to provide such services.

The Company Certification should be completed in its entirety. Any person, employee, subcontractor, agent, officer, owner or shareholder of the corporation, firm or partnership who will provide services under a resulting contract and who will be in direct contact with York County School Division students shall meet the certification requirements.

Please note that this certification shall be binding throughout the contract period and the contractor shall provide the York County School Division with immediate notice of any event which renders their certifications untrue.

BID SCHEDULE

UNIT PRICE SCHEDULE

Unit Price No. 1 –Remove and Replace Damaged and/or Deteriorating Roof Deck Materials and Labor per Square Foot of Deck.

Description: Remove 500 SF of damaged or deteriorating gypsum fill, poured gypsum roof deck and GWB centering and replacement with metal roof deck and polyisocyanurate insulation, tapered to match adjacent gypsum deck surface, as shown on the Contract documents. This quantity is in excess of the Contract requirement and 500 SF allowance and will be as determined by the Owner's Representative.

LABOR & MATERIALS $_____ /SF

Unit Price No 2- One Coat of Paint On Previously Painted Block:Labor and Material

Description: Prepare existing block wall for painting and apply one coat of the paint specified for coating previously painted block walls. This quantity is in excess of the Contract requirement and 500 SF allowance and will be as determined by the Owner's Representative.

Unit of Measure: SF of painted block wall in excess of the Contract requirement and the 500 SF allowance.

LABOR & MATERIALS $_____ /SF

Unit Price No. 3 –Suspended Acoustical Ceiling Panel Replacement: Labor and Material

Description: Immediately following the Pre-Construction meeting the Owner's Representative, the Architect and the Contractor shall survey the ceiling tiles to remain and determine those that are damaged beyond useful life and or are of unacceptable appearance. If this quantity is in excess of the Contract requirements and the 500 square foot allowance, the Contractor will be compensated using the unit price bid for this work.

a. Unit of Measure: Square feet of ceiling tiles replaced in excess of the Contract requirements and the 500 square foot allowance.

LABOR & MATERIALS $_____ /SF

Unit Price No. 4 - Fire Safing/Sealing Openings in Masonry Corridor Walls: Labor and Material

Description: Provide fire safing/sealing of previously unidentified openings in the corridor walls to ensure compliance with the one hour fire resistance requirement of these walls. Assume each opening to be safed is two inches square or diameter. Larger openings will be priced on multiples of the assumed size. If he quantity of these openings exceeds the 50 safes in Allowance No. 4 and other safing and sealing identified in the Contract Documents, the Contractor will be compensated using the unit price bid for this work.

a. Unit of Measure: Each 2 inch square or diameter of safing/sealing.

LABOR & MATERIALS $_____ /Each

Alternate No. 1 - Complete all work designed, specified and detailed located in the Kitchen/Service portion of Area 'C' (Roofing and HVAC), and Area 'D2' (Cafeteria HVAC only) of the building as delineated on the drawings. Alternate work shall also include replacement of the refrigeration system at Kitchen walk-in coolers. **Under Alternate #1, this work shall be performed concurrently with Base Bid work, to commence on June 16, 2014 and achieve substantial completion, ready for the Owner's occupancy and use, not later than August 15, 2014.** Final completion will be accomplished not later than 30 days after the date established for substantial completion.

Alternate Price No. 1 $_____

Alternate No. 2 - Complete all work designed, specified and detailed located in the Kitchen/Service portion of Area 'C' (Roofing and HVAC), and Area 'D2' (Cafeteria HVAC only) of the building as delineated on the drawings. Alternate work shall also include replacement of the refrigeration system at Kitchen walk-in coolers. **Under Alternate #2, this work shall be performed during the following summer, to commence on June 15, 2015 and achieve substantial completion, ready for the Owner's occupancy and use, not later than August 14, 2015.** Final completion will be accomplished no later than 30 days after the date established for substantial completion.

Alternate Price No. 2 $_____

The undersigned, having read and understood the Bidding Documents, and having visited the site and become familiar with local conditions under which the Work is to be performed, proposes to execute the Work described in the Contract Documents in accordance with the Bidding Documents specifications, terms, and conditions and related documents herein, and based on the materials, equipment and systems required by the Bidding Documents, without exception, the bidder agrees to provide all labor, supervision, materials, tools, equipment, warranties, and invoice, for the total sum of:

A. BASE BID, LUMP SUM:

_____

Dollars ($_____)

30.0 CONTRACTOR QUALIFICATIONS:

Contractor must have completed at least three (3) projects of similar size and scope to this Project to the satisfaction of the Owner in the last five (5) years. References for these Projects must be included in the Contractors Data section 34.0 of this IFB1910.

31.0 ADDENDA

Bidder acknowledges receipt of the following addenda and agrees the requirements thereof are included in this proposal:

Addenda #	Date	Date Received
_____	_____	
_____	_____	
_____	_____	

32.0 CONTRACT TIME

The Contractor shall have access to the site commencing with the Notice to Proceed. **The Work shall start no earlier than Monday, June 16, 2014 and all work must be substantially completed by August 15, 2014. Final Completion shall be no later than September 25, 2014.** This time frame makes allowance for a total of 4 weather delay days per calendar month. A day will be considered a rain day when, on a work day(Monday through Friday), it rains at the job site so less than 4 hours of production can occur or when the chance of rain exceeds 70% as reported by a source agreed upon at the pre-construction meeting. Days that are rain days will be established by mutual agreement on that day, but the Owner will have final authority **on that day** to establish whether or not the day will be considered a rain day. The Contractor's failure to make a rain day claim on the day of the occurrence will be interpreted as a "no-claim".

33.0 ROOFING CONTRACTOR ERRORS

If the Architect/Engineer is required to visit any building site due to the Contractor's or Subcontractor's errors, mistakes, faulty workmanship or materials, the Contractor shall pay the Owner $200.00 per visit. If the Architect/Engineer is required to provide design services resulting from the Contractor's or Subcontractor's mistakes, faulty workmanship or materials, the Contractor shall pay the Owner $ 95.00 per hour for the Architect/Engineer's services.

34.0 AGREEMENT TO EXECUTE CONTRACT:

Within 60 days after the opening of Bids or any time thereafter before withdrawing this Bid, the Undersigned will, within ten (10) days after receipt of written Notice of Acceptance of this Bid, execute and deliver to the Owner the Contract Agreement Forms, together with Performance and Payment Bonds as required by the Contract Documents and Bids as accepted. The Undersigned designates as his office to which Notice of Acceptance shall be mailed or otherwise delivered:

(Name) _____

(Address) _____

Virginia Class A Contractors License Number:_____

Virginia Contractors License Number: _____

Bidder is (Check one): Individual ( ) Partnership ( ) Corporation ( )

Valid Until _____

Registration title of specialty description

Residence of Bidder (if individual): _____

Name of Partners (if partnership): _____

State of Incorporation: (if corporation): _____

If a bidder shall fail to obtain this license prior to submission of bid, the bid shall not be considered.

_____I certify the firm signing this bid and registered under that name is legally qualified to perform all work included in the scope of the Contract as determined by the Commonwealth of Virginia, Department of Commerce, State Board for Contractors, in granting registration.

SIGNATURE:

Typed Name of Bidder: _____

By: _____ Corporate Seal

Title: _____

Date of Bid: _____

35.0 CONTRACTOR DATA:

All bidders must complete this section and return it with your bids, in order for Owner to complete the evaluation of the bids.

35.1 Experience/Years in Business:
Indicate the length of time you have been in business providing this type of commodity and service: ____years ____months.

35.2 References:
Indicate below a listing of at least three (3) different and recent references where you have provided this type of equipment and / or service in the last five years. Include the dates equipment and services were provided and the name and address of the person we have your permission to contact.

CLIENT	DATE	ADDRESS	PERSON TO CONTACT & PHONE NO.

SCHEDULE OF ALLOWANCES

36.0 Types of allowances include the following:

Allowance No. 1: Included in the base bid the cost to remove 500 SF of damaged or deteriorating, gypsum fill, poured gypsum roof deck and GWB centering and replacement with metal roof deck, polyisocyanurate insulation, perlite coverboard and two-ply modified bitumen roof system shown on the drawings and noted on the Contract Drawings. If this allowance is not used, or only used in part, the Owner will be reimbursed by way of a credit change order based on the price bid for this work in the unit price section of the Contractor's bid.

Allowance No. 2: Included in the base bid the cost of preparing 500 SF of existing block walls for painting and apply one coat of paint as specified for coating previously painted block walls. If this allowance is not used, or only used in part, the Owner will be reimbursed by way of a credit change order based on the price bid for this work in the unit price section of the Contractor's bid.

Allowance No. 3:Included in the base bid the cost of removing 500 square feet of existing suspended acoustical ceiling paneling in excess of those shown on the Construction Documents and as determined by the Owner's Representative and replacing them with new. If this allowance is not used, or only used in part, the Owner will be reimbursed by way of a credit change order based on the price bid for this work in the unit price section of the Contractor's bid.

Allowance No. 4: Include in the Base Bid the cost of providing fire safing/sealing of 50 previously unidentified openings in the 8-inch thick CMU corridor walls to ensure compliance with the one-hour fire-resistance requirement of these walls. Assume each opening to be safed is two inches square or diameter. Larger openings will be priced on multiples of the assumed size. If the quantity of these openings exceeds the 50 safes in Allowance No. 4 and other safing and sealing identified in the Contract Documents, the Contractor will be compensated using the unit price bid for this work.

CONTRACT FORM
SERVICES CONTRACT

Agreement No._____

This AGREEMENT, dated this_____ day of_____, is by and between the COUNTY SCHOOL BOARD OF YORK COUNTY, VIRGINIA (a political subdivision of the Commonwealth of Virginia); hereinafter called the Owner; and_____
(a corporation organized and existing under the laws of the Commonwealth of Virginia); hereinafter called the Contractor.

WITNESSETH: The Owner and Contractor, for the consideration stated herein, agree as follows:

Scope of Work:
The Contractor shall perform all required work and shall provide and furnish all labor, materials, necessary tools, expendable equipment and utility and transportation service and all else required to complete:

Partial Roof & HVAC System Replacement at Grafton Bethel Elementary School, Phase Three

In accordance with IFB1910 and the Project Manual prepared by Hudson + Associates Architects, PLLC dated February 14, 2014 "Partial Roof and HVAC System Replacement at Grafton-Bethel Elementary School, Phase III, York County School Division Final Specifications – Issued for Construction" all in strict accordance with the Specifications, including any and all Addenda, and in strict compliance with the Contract Documents hereinafter enumerated.

It is understood and agreed that said labor, materials, tools, equipment and service shall be furnished and said work performed and completed under the direction and supervision of the Contractor and subject to the approval of the Owner or its authorized representative.

GUARANTEE:
All materials and equipment furnished by the Contractor and all work involved in this Contract shall be and the same are hereby guaranteed by the Contractor free from defects owing to faulty materials or workmanship for a period of 2 years after date of substantial completion of work. All such materials and equipment, furnished by the Contractor, and all work involved in this Contract which proves defective, by reason of faulty material or workmanship within said period of 2 years, shall be replaced by the Contractor free of cost to the Owner.

Nothing herein shall be deemed a waiver of Owner to seek any available legal or equitable remedy, A waiver by Owner of any other available remedy for Contract default, a waiver by Owner to seek any available remedy provided by any applicable warranty, a waiver of any applicable statue of limitations period, or a waiver of any other applicable warranty period.

Contract Price:

The Owner shall pay the Contractor as just compensation for the performance of this Contract, subject to any additions or deductions as provided in the Contract Documents, the lump sum and unit prices as contained in the Bid Schedule attached hereto.

The Contract Amount is (_____ Dollars).
($_____) lump sum and unit prices extended as herein contained.

Payments:
The Owner will pay to the Contractor in the manner and at such times as set forth in Section 22 of IFB 1910 such amounts as required by the Contract Documents. Unless otherwise provided, the Owner will pay to the Contractor within thirty (30) calendar days after receipt of an approved Certificate for Payment from the Architect and following acceptance of same by the Owner.

Liquidated Damages:
Because time is of the essence and because the consequences of untimely completion of the Work cannot be quantified as of the date of this Agreement, the parties agree that the Contractor and the Contractor's surety, if any, shall be liable for and shall pay the Owner the sums hereinafter stipulated as liquidated damages, and not as a penalty, for each calendar day of delay until the Work is substantially complete Two Hundred U.S. Dollars ($200.00), and for each calendar day of delay until the Work is finally complete an additional Two Hundred U.S. Dollars ($200.00) for a possible total of Four Hundred U. S. Dollars ($400.00) per calendar day of delay, and Contractor further agrees that Owner may deduct and retain such liquidated damages out of any money due Contractor under the terms of this Contract.

Time:
The undersigned Contractor agrees to commence work within (10) calendar days after the date of Notice to Proceed and further agrees to complete the Contract Work within the following specified time limits:

The Contractor shall have access to the site commencing with the Notice to Proceed. **The Work shall start no earlier than Monday, June 16, 2014 and all work must be substantially completed by August 15, 2014. Final Completion shall be no later than September 25, 2014.**

Roofing Contractor Errors:
If the Architect/Engineer is required to visit any building site due to the Contractor's or Subcontractor's errors, mistakes, faulty workmanship or materials, the Contractor shall pay the Owner $150.00 per visit. If the Architect/Engineer is required to provide design services resulting from the Contractor's or Subcontractor's mistakes, faulty workmanship or materials, the Contractor shall pay the Owner $ 75.00 per hour for the Architect/Engineer's services.

THIS AGREEMENT SHALL BE BINDING UPON ALL PARTIES HERETO AND THEIR RESPECTIVE HEIRS, EXECUTORS, ADMINISTRATORS, SUCCESSORS, AND ASSIGNS.

Component Parts of the Contract:
This Contract consists of the following component parts, all of which are hereby made a part hereof as if herein set out in full:
1. Advertisement for Bids

2. Invitation For Bids (IFB #1910), and any Exhibits, attachments, plans or drawings thereto
3. Information For Bidders as incorporated into IFB1910
4. General Terms and Conditions AIA Document A201-1997 as modified by IFB1910 and the Supplemental Conditions to AIA Document A201-1997
5. Supplemental Conditions to AIA Document A201-1997 contained in IFB1910 section 24.0
6. Bid Proposal
7. Contract (this document)
8. Bid Bond
9. Payment Bond
10. Performance Bond
11. Certificate of Insurance with endorsement
12. Contractor's License
13. Notice of Award
14. Notice to Proceed
15. Change Orders (if any)
16. Other Documents as may be required by law or appended hereto
17. Drawings prepared by Hudson + Associates Architects, PLLC
18. Warranties as specified in the Project Manual in number 20 (below).
19. Company Certification in accordance with Virginia Code § 22.1-296.1
20. Project Manual prepared by Hudson & Associates Architects, PLLC
    Dated 02/14/2014 **“**“Partial Roof and HVAC System Replacement at Grafton-Bethel Elementary School, Phase III, York County School Division Final Specifications – Issued for Construction”
    Including all specifications and schedules contained therein.
21. Addenda:

    No. _____, dated _____, 2014

    No. _____, dated _____, 2014

    No. _____, dated _____, 2014

IN WITNESS WHEREOF, the parties hereto have caused this Agreement to be executed as of the day and year first above written in (4) counter-parts each of which shall for all purposes be deemed an original.

ATTEST:

_____
NAME

_____
TITLE

COUNTY SCHOOL BOARD OF YORK COUNTY, VA
OWNER

BY _____
TITLE: SUPERINTENDENT OF SCHOOLS

ATTEST:

_____
NAME

_____
TITLE

_____
CONTRACTOR'S ADDRESS:

_____

_____

_____

_____
CONTRACTOR

_____
BY

_____
TITLE

CONTRACTOR'S FEDERAL I. D. NO.:

_____

APPROVED AS TO FORM:

_____
COUNTY ATTORNEY

PERFORMANCE BOND

Bond No._____

Amount: $_____

KNOW ALL PERSONS BY THESE PRESENTS, that
_____ _____of
_____
_____, hereinafter called the Contractor and _____ a corporation duly organized and existing under and by virtue of the laws of the State of _____, hereinafter called the Surety, and authorized to transact business within the Commonwealth of Virginia as the Surety, are held and firmly bound unto _____ as Owner, in the sum of _____dollars ($_____), lawful money of the United States of America, for payment of which, well and truly be made to the Owner, the Contractor and the Surety bind themselves and each of their heirs, executors, administrators, successors, and assigns, jointly and severally, firmly by these presents as follows:

THE CONDITION OF THE ABOVE OBLIGATION IS SUCH THAT:

WHEREAS, the Contractor has executed and entered into a certain Agreement, hereto attached, with the Owner dated _____, 20____, for:

Partial Roof & HVAC System Replacement at Grafton Bethel Elementary School, Phase Three.

NOW THEREFORE, if the Contractor, and its successors and assigns, shall at all times duly, promptly, and faithfully perform the Work and any alteration in or addition to the obligations of the Contractor arising thereunder, including the matter of infringement, if any, of patents or other proprietary rights, and shall assure all guarantees against defective workmanship and materials, including the guarantee period following final completion by the Contractor and final acceptance by the Owner and comply with all the covenants therein contained in the Specifications, Drawings, and other Contract Documents required to be performed by the Contractor, in the manner and within the times provided in the Agreement, and shall fully indemnify and save harmless the Owner from all costs and damage which it may suffer by reason or failure to do so, and shall fully reimburse and repay it all outlay and expenses which it may incur in making good any default, and reasonable counsel fees incurred in the prosecution of or defense of any action arising out of or in connection with any such default, then this obligation shall be void; otherwise to remain in full force and effect.

PROVIDED, HOWEVER, that the Surety, for value received, for itself and its successors and assigns, hereby stipulates and agrees that no change, extension of time, alteration, or addition to the terms of the Contract Documents or to the Work to be performed thereunder, or payment thereunder before the time required therein, or waiver of any provision thereof, or assignment, subletting or transfer thereof or any part thereof, shall in any way affect its obligation on this Bond, and it does hereby waive notice of any such change, extension of time, alteration, addition to the terms of the Contract Documents or any such payment, waiver, assignment, subcontract or transfer.

PROVIDED, FURTHER, that no final settlement between the Owner and the Contractor shall abridge the right of any beneficiary hereunder, whose claim may be unsatisfied.

Whenever Contractor shall be declared by Owner to be in default under the Contract, the Owner having performed Owner's obligations thereunder, the Owner shall have the right, at its option, to require the Surety to promptly proceed to remedy the default within 30 days of notice by proceeding or procuring others to proceed with completing the Agreement with its terms and conditions; and all reserves, deferred payments, and other funds provided by the Agreement to be paid to Contractor shall be paid to Surety at the same times and under the same conditions as by the terms of that Agreement such fund would have been paid to Contractor had the Agreement been performed by Contractor; and Surety shall be entitled to such funds in preference to any assignee of Principal of any adverse claimant. Notwithstanding the above, the Owner shall have the right, with the approval of the Surety which shall not be unreasonably withheld, to take over and assume completion of the Agreement and be promptly paid in cash by the Surety for the cost of such completion less the balance of the Contract price.

The Performance Bond shall require the surety to give written notice to the Owner, within seven (7) days after receipt of a declaration of default of the surety's election either to remedy the default or defaults promptly or to pay the Owner the penal sum of the bond, time being of the essence. In the notice of election, the surety shall indicate the date on which the remedy or performance will commence, and it shall then be the duty of the surety to give prompt notice in writing to the Owner immediately upon completion of (a) the remedy and/or correction of each default, (b) the remedy and/or correction of each item of Work, (c) the finishing of each omitted item of Work, and (d) the performance of the Work. The surety shall not assert insolvency of the Contractor or Contractor's denial of default as justification for its failure to promptly remedy the default or defaults or to perform the Work.

IN WITNESS WHEREOF, all above parties bounded together have executed this instrument this ____ day of _____, 20___, the name and corporate seal of each corporate party being hereto affixed and those presents duly signed by its undersigned representative, pursuant to authority of its governing body.

CONTRACTOR

_____

By:_____(Seal)

Name:_____

Title: _____

_____
Attest

SURETY

_____

By:_____(Seal)

_____
Attest

APPROVED AS TO FORM:_____, 20____

_____
OWNER

NOTE: Date of Bond shall not be prior to the date of the Agreement. If the Contractor is a partnership, all partners shall execute the Bond.

IMPORTANT: The Surety named on this Bond shall be one who is licensed to conduct business in the Commonwealth of Virginia, and named in the current list of Companies Holding Certificates of Authority as Acceptable Sureties on Federal Bonds and as Acceptable Reinsuring Companies, as published in Circular 570 (amended) by the Audit Staff Bureau of Accounts, U.S. Treasury Department. All Bonds signed by an agent shall be accompanied by a certified copy of the authority to act for the Surety at the time of signing of this Bond.

PAYMENT BOND

Bond No._____

Amount: $_____

KNOW ALL PERSONS BY THESE PRESENTS, that _____ _____of_____ __ _____hereinafter called the Contractor and _____ a corporation duly organized and existing under and by virtue of the laws of the State _____, hereinafter called the Surety, and authorized to transact business within the Commonwealth of Virginia as the Surety, are held and firmly bound unto _____ as Owner, in the sum of_____ dollars ($_____), lawful money of the United States of America, for payment of which, well and truly be made to the Owner, the Contractor and the Surety bind themselves and each of their heirs, executors, administrators, successors, and assigns, jointly and severally, firmly by these presents as follows:

THE CONDITION OF THE ABOVE OBLIGATION IS SUCH THAT:

WHEREAS, the Contractor has executed and entered into a certain Agreement, hereto attached, with the Owner dated _____, 20___, for:

Partial Roof & HVAC System Replacement at Grafton Bethel Elementary School, Phase Three.

NOW THEREFORE, if the Contractor shall promptly make payments to all persons, firms, subcontractors, and corporations furnishing materials for or performing labor in the prosecution of the Work provided for in the Agreement, and any authorized extension or modification thereof, including all amounts due for materials, lubricants, oil, gasoline, repairs on machinery, equipment, and tools consumed, used or rented in connection with the construction of the Work, and all insurance premiums on the Work, and for all labor performed in the Work, whether by Subcontractor or otherwise, then this obligation shall be void, otherwise to remain in full force and effect.

PROVIDED, HOWEVER, that the Surety, for value received, hereby stipulates and agrees that no change, extension of time, alteration, or addition to the terms of the Contract Documents or to the Work to be performed thereunder, shall in any way affect its obligation on this Bond, and it does hereby waive notice of any such change, extension of time, alteration, or addition to the terms of the Contract Documents.

PROVIDED, FURTHER, that no final settlement between the Owner and the Contractor shall abridge the right of any beneficiary hereunder, whose claim may be unsatisfied.

IN WITNESS WHEREOF, all above parties bounded together have executed this instrument this ____ day of _____, 20___, the name and corporate seal of each corporate party being hereto affixed and those presents duly signed by its undersigned representative, pursuant to authority of its governing body.

CONTRACTOR

By:_____(Seal)

Name:_____

Title:_____

_____
Attest

SURETY

_____

By: _____(Seal)

_____
Attest

APPROVED AS TO FORM: _____, 20_____

_____
OWNER

NOTE: Date of Bond shall not be prior to the date of the Agreement. If the Contractor is a partnership, all partners shall execute the Bond.

IMPORTANT: The Surety named on this Bond shall be one who is licensed to conduct business in the Commonwealth of Virginia, and named in the current list of Companies Holding Certificates of Authority as Acceptable Sureties on Federal Bonds and as Acceptable Reinsuring Companies, as published in Circular 570 (amended) by the Audit Staff Bureau of Accounts, U.S. Treasury Department. All Bonds signed by an agent shall be accompanied by a certified copy of the authority to act for the Surety at the time of signing of this Bond.

COMPANY CERTIFICATION

The undersigned, on behalf of _____
(insert company name)
hereby certifies to the County School Board of York County, Virginia and York County School Division that any owner/shareholder of the company, any employee, or any subcontractor who will have **direct contact with students**:

(A) Has not been convicted of a felony or any offense involving the sexual molestation, physical or sexual abuse or rape of a child: and

"Direct contact with students" means being in the presence of students during regular school hours or during school sponsored activities (Code of Virginia § 22.1-296.1)

This certification is provided in accordance with the provisions of sec. 22.1-296.1 of the Code of Virginia.

I agree that this certification shall be binding throughout the contract period and I will provide the York County School Division with immediate notice of any event which renders this certification untrue. Additionally I agree to require any employee who is assigned to the performance of this contract after it is awarded, and who will have direct contact with students, to execute and deliver an individual certification prior to having any direct contact with the students. **Attached to this certification are the individual certifications for each employee/subcontractor having direct contact with students.**

Dated: _____ _____
Signature

_____
Printed Name and Title of Person Making Certification

Note: In accordance with Virginia Code § 22.1-296.1, any person making a materially false statement regarding any such offense shall be guilty of a Class 1 misdemeanor and, upon conviction, the fact of such conviction shall be grounds for the revocation of the contract to provide such services and, when relevant, the revocation of any license required to provide such services.

For Office Use Only

Acknowledged by: _____ Date:_____

If Applicable:
Project Name: _____ PO # : _____

AIA® Document A201™ – 1997

General Conditions of the Contract for Construction

for the following PROJECT:
(Name and location or address)

THE OWNER:
(Name and address)

THE ARCHITECT:
(Name and address)

This document has important legal consequences. Consultation with an attorney is encouraged with respect to its completion or modification.

This document has been approved and endorsed by The Associated General Contractors of America

TABLE OF ARTICLES

1 GENERAL PROVISIONS

2 OWNER

3 CONTRACTOR

4 ADMINISTRATION OF THE CONTRACT

5 SUBCONTRACTORS

6 CONSTRUCTION BY OWNER OR BY SEPARATE CONTRACTORS

7 CHANGES IN THE WORK

8 TIME

9 PAYMENTS AND COMPLETION

10 PROTECTION OF PERSONS AND PROPERTY

11 INSURANCE AND BONDS

12 UNCOVERING AND CORRECTION OF WORK

13 MISCELLANEOUS PROVISIONS

14 TERMINATION OR SUSPENSION OF THE CONTRACT

AIA Document A201™ – 1997. Copyright © 1888, 1911, 1915, 1918, 1925, 1937, 1951, 1958, 1961, 1963, 1966, 1970, 1976, 1987 and 1997 by The American Institute of Architects. All rights reserved. WARNING: This AIA® Document is protected by U.S. Copyright Law and International Treaties. Unauthorized reproduction or distribution of this AIA® Document, or any portion of it, may result in severe civil and criminal penalties, and will be prosecuted to the maximum extent possible under the law. Purchasers are not permitted to reproduce this document. To report copyright violations of AIA Contract Documents, e-mail The American Institute of Architects' legal counsel, copyright@aia.org.

INDEX

(Numbers and Topics in Bold are Section Headings)

Acceptance of Nonconforming Work
9.6.6, 9.9.3, **12.3**
Acceptance of Work
9.6.6, 9.8.2, 9.9.3, 9.10.1, 9.10.3, 12.3
Access to Work
3.16, 6.2.1, 12.1
Accident Prevention
4.2.3, 10
Acts and Omissions
3.2, 3.3.2, 3.12.8, 3.18, 4.2.3, 4.3.8, 4.4.1, 8.3.1, 9.5.1, 10.2.5, 13.4.2, 13.7, 14.1
Addenda
1.1.1, 3.11
Additional Costs, Claims for
4.3.4, 4.3.5, 4.3.6, 6.1.1, 10.3
Additional Inspections and Testing
9.8.3, 12.2.1, 13.5
Additional Time, Claims for
4.3.4, 4.3.7, 8.3.2
ADMINISTRATION OF THE CONTRACT
3.1.3, **4**, 9.4, 9.5
Advertisement or Invitation to Bid
1.1.1
Aesthetic Effect
4.2.13, 4.5.1
Allowances
3.8
All-risk Insurance
11.4.1.1
Applications for Payment
4.2.5, 7.3.8, 9.2, **9.3**, 9.4, 9.5.1, 9.6.3, 9.7.1, 9.8.5, 9.10, 11.1.3, 14.2.4, 14.4.3
Approvals
2.4, 3.1.3, 3.5, 3.10.2, 3.12, 4.2.7, 9.3.2, 13.4.2, 13.5
Arbitration
4.4, 4.5.1, 4.5.2, **4.6**, 8.3.1, 9.7.1, 11.4.9, 11.4.10
Architect
4.1
Architect, Definition of
4.1.1
Architect, Extent of Authority
2.4, 3.12.7, 4.2, 4.3.6, 4.4, 5.2, 6.3, 7.1.2, 7.3.6, 7.4, 9.2, 9.3.1, 9.4, 9.5, 9.8.3, 9.10.1, 9.10.3, 12.1, 12.2.1, 13.5.1, 13.5.2, 14.2.2, 14.2.4
Architect, Limitations of Authority and Responsibility
2.1.1, 3.3.3, 3.12.4, 3.12.8, 3.12.10, 4.1.2, 4.2.1, 4.2.2, 4.2.3, 4.2.6, 4.2.7, 4.2.10, 4.2.12, 4.2.13, 4.4, 5.2.1, 7.4, 9.4.2, 9.6.4
Architect's Additional Services and Expenses
2.4, 11.4.1.1, 12.2.1, 13.5.2, 13.5.3, 14.2.4
Architect's Administration of the Contract
3.1.3, **4.2**, 4.3.4, 4.4, 9.4, 9.5
Architect's Approvals
2.4, 3.1.3, 3.5.1, 3.10.2, 4.2.7
Architect's Authority to Reject Work
3.5.1, 4.2.6, 12.1.2, 12.2.1
Architect's Copyright
1.6
Architect's Decisions
4.2.6, 4.2.7, 4.2.11, 4.2.12, 4.2.13, 4.3.4, 4.4.1, 4.4.5, 4.4.6, 4.5, 6.3, 7.3.6, 7.3.8, 8.1.3, 8.3.1, 9.2, 9.4, 9.5.1, 9.8.4, 9.9.1, 13.5.2, 14.2.2, 14.2.4
Architect's Inspections
4.2.2, 4.2.9, 4.3.4, 9.4.2, 9.8.3, 9.9.2, 9.10.1, 13.5
Architect's Instructions
3.2.3, 3.3.1, 4.2.6, 4.2.7, 4.2.8, 7.4.1, 12.1, 13.5.2
Architect's Interpretations
4.2.11, 4.2.12, 4.3.6
Architect's Project Representative
4.2.10
Architect's Relationship with Contractor
1.1.2, 1.6, 3.1.3, 3.2.1, 3.2.2, 3.2.3, 3.3.1, 3.4.2, 3.5.1, 3.7.3, 3.10, 3.11, 3.12, 3.16, 3.18, 4.1.2, 4.1.3, 4.2, 4.3.4, 4.4.1, 4.4.7, 5.2, 6.2.2, 7, 8.3.1, 9.2, 9.3, 9.4, 9.5, 9.7, 9.8, 9.9, 10.2.6, 10.3, 11.3, 11.4.7, 12, 13.4.2, 13.5
Architect's Relationship with Subcontractors
1.1.2, 4.2.3, 4.2.4, 4.2.6, 9.6.3, 9.6.4, 11.4.7
Architect's Representations
9.4.2, 9.5.1, 9.10.1
Architect's Site Visits
4.2.2, 4.2.9, 4.3.4, 9.4.2, 9.5.1, 9.9.2, 9.10.1, 13.5
Asbestos
10.3.1
Attorneys' Fees
3.18.1, 9.10.2, 10.3.3
Award of Separate Contracts
6.1.1, 6.1.2
Award of Subcontracts and Other Contracts for Portions of the Work
5.2

Basic Definitions
1.1
Bidding Requirements
1.1.1, 1.1.7, 5.2.1, 11.5.1
Boiler and Machinery Insurance
11.4.2
Bonds, Lien
9.10.2
Bonds, Performance, and Payment
7.3.6.4, 9.6.7, 9.10.3, 11.4.9, 11.5
Building Permit
3.7.1

AIA Document A201™ – 1997 Copyright © 1888, 1911, 1915, 1918, 1925, 1937, 1951, 1958, 1961, 1963, 1966, 1970, 1976, 1987 and 1997 by The American Institute of Architects. All rights reserved. WARNING: This AIA® Document is protected by U.S. Copyright Law and International Treaties. Unauthorized reproduction or distribution of this AIA® Document, or any portion of it, may result in severe civil and criminal penalties, and will be prosecuted to the maximum extent possible under the law. Purchasers are not permitted to reproduce this document. To report copyright violations of AIA Contract Documents, e-mail The American Institute of Architects' legal counsel, copyright@aia.org.

Capitalization
1.3
Certificate of Substantial Completion
9.8.3, 9.8.4, 9.8.5
Certificates for Payment
4.2.5, 4.2.9, 9.3.3, **9.4**, 9.5, 9.6.1, 9.6.6, 9.7.1, 9.10.1, 9.10.3, 13.7, 14.1.1.3, 14.2.4
Certificates of Inspection, Testing or Approval
13.5.4
Certificates of Insurance
9.10.2, 11.1.3
Change Orders
1.1.1, 2.4.1, 3.4.2, 3.8.2.3, 3.11.1, 3.12.8, 4.2.8, 4.3.4, 4.3.9, 5.2.3, 7.1, **7.2**, 7.3, 8.3.1, 9.3.1.1, 9.10.3, 11.4.1.2, 11.4.4, 11.4.9, 12.1.2
Change Orders, Definition of
7.2.1
CHANGES IN THE WORK
3.11, 4.2.8, **7**, 8.3.1, 9.3.1.1, 11.4.9
Claim, **Definition** of
4.3.1
Claims and Disputes
3.2.3, **4.3**, 4.4, 4.5, 4.6, 6.1.1, 6.3, 7.3.8, 9.3.3, 9.10.4, 10.3.3
Claims and Timely Assertion of Claims
4.6.5
Claims for Additional Cost
3.2.3, 4.3.4, **4.3.5**, 4.3.6, 6.1.1, 7.3.8, 10.3.2
Claims for Additional Time
3.2.3, 4.3.4, **4.3.7**, 6.1.1, 8.3.2, 10.3.2
Claims for Concealed or Unknown Conditions
4.3.4
Claims for Damages
3.2.3, 3.18, 4.3.10, 6.1.1, 8.3.3, 9.5.1, 9.6.7, 10.3.3, 11.1.1, 11.4.5, 11.4.7, 14.1.3, 14.2.4
Claims Subject to Arbitration
4.4.1, 4.5.1, 4.6
Cleauing Up
3.15, 6.3
Commencement of Statntory Limitation Period
13.7
Commencement of the Work, Conditions Relating to
2.2.1, 3.2.1, 3.4.1, 3.7.1, 3.10.1, 3.12.6, 4.3.5, 5.2.1, 5.2.3, 6.2.2, 8.1.2, 8.2.2, 8.3.1, 11.1, 11.4.1, 11.4.6, 11.5.1
Commencement of the Work, Definition of
8.1.2
Communications Facilitating Contract Administration
3.9.1, **4.2.4**
Completion, Conditions Relating to
1.6.1, 3.4.1, 3.11, 3.15, 4.2.2, 4.2.9, 8.2, 9.4.2, 9.8, 9.9.1, 9.10, 12.2, 13.7, 14.1.2
COMPLETION, PAYMENTS AND
9
Completion, Substantial
4.2.9, 8.1.1, 8.1.3, 8.2.3, 9.4.2, 9.8, 9.9.1, 9.10.3, 12.2, 13.7
Compliance with Laws
1.6.1, 3.2.2, 3.6, 3.7, 3.12.10, 3.13, 4.1.1, 4.4.8, 4.6.4, 4.6.6, 9.6.4, 10.2.2, 11.1, 11.4, 13.1, 13.4, 13.5.1, 13.5.2, 13.6, 14.1.1, 14.2.1.3
Concealed or Unknown Conditions
4.3.4, 8.3.1, 10.3
Conditions of the Contract
1.1.1, 1.1.7, 6.1.1, 6.1.4
Consent, Written
1.6, 3.4.2, 3.12.8, 3.14.2, 4.1.2, 4.3.4, 4.6.4, 9.3.2, 9.8.5, 9.9.1, 9.10.2, 9.10.3, 11.4.1, 13.2, 13.4.2
CONSTRUCTION BY OWNER OR BY SEPARATE CONTRACTORS
1.1.4, **6**
Construction Change Directive, Definition of
7.3.1
Construction Change Directives
1.1.1, 3.12.8, 4.2.8, 4.3.9, 7.1, **7.3**, 9.3.1.1
Construction Schedules, Contractor's
3.10, 3.12.1, 3.12.2, 4.3.7.2, 6.1.3
Contingent Assignment of Snbcontracts
5.4, 14.2.2.2
Continuing Contract Performance
4.3.3
Contract, Definition of
1.1.2
CONTRACT, TERMINATION OR SUSPENSION OF THE
5.4.1.1, 11.4.9, **14**
Contract Administration
3.1.3, 4, 9.4, 9.5
Contract Award and Execution, Conditions Relating to
3.7.1, 3.10, 5.2, 6.1, 11.1.3, 11.4.6, 11.5.1
Contract Documents, The
1.1, 1.2
Contract Documents, Copies Furnished and Use of
1.6, 2.2.5, 5.3
Contract Documents, Definition of
1.1.1
Contract Sum
3.8, 4.3.4, 4.3.5, 4.4.5, 5.2.3, 7.2, 7.3, 7.4, **9.1**, 9.4.2, 9.5.1.4, 9.6.7, 9.7, 10.3.2, 11.4.1, 14.2.4, 14.3.2
Contract Sum, Definition of
9.1
Contract Time
4.3.4, 4.3.7, 4.4.5, 5.2.3, 7.2.1.3, 7.3, 7.4, 8.1.1, 8.2, 8.3.1, 9.5.1, 9.7, 10.3.2, 12.1.1, 14.3.2
Contract Time, Definition of
8.1.1
CONTRACTOR
3

AIA Document A201™ – 1997 Copyright © 1888, 1911, 1915, 1918, 1925, 1937, 1951, 1958, 1961, 1963, 1966, 1970, 1976, 1987 and 1997 by The American Institute of Architects. All rights reserved. WARNING: This AIA® Document is protected by U.S. Copyright Law and International Treaties. Unauthorized reproduction or distribution of this AIA® Document, or any portion of it, may result in severe civil and criminal penalties, and will be prosecuted to the maximum extent possible under the law. Purchasers are not permitted to reproduce this document. To report copyright violations of AIA Contract Documents, e-mail The American Institute of Architects' legal counsel, copyright@aia.org.

Contractor, Definition of
3.1, 6.1.2
Contractor's Construction Schedules
3.10, 3.12.1, 3.12.2, 4.3.7.2, 6.1.3
Contractor's Employees
3.3.2, 3.4.3, 3.8.1, 3.9, 3.18.2, 4.2.3, 4.2.6, 10.2, 10.3, 11.1.1, 11.4.7, 14.1, 14.2.1.1,
Contractor's Liability Insurance
11.1
Contractor's Relationship with Separate Contractors and Owner's Forces
3.12.5, 3.14.2, 4.2.4, 6, 11.4.7, 12.1.2, 12.2.4
Contractor's Relationship with Subcontractors
1.2.2, 3.3.2, 3.18.1, 3.18.2, 5, 9.6.2, 9.6.7, 9.10.2, 11.4.1.2, 11.4.7, 11.4.8
Contractor's Relationship with the Architect
1.1.2, 1.6, 3.1.3, 3.2.1, 3.2.2, 3.2.3, 3.3.1, 3.4.2, 3.5.1, 3.7.3, 3.10, 3.11, 3.12, 3.16, 3.18, 4.1.2, 4.1.3, 4.2, 4.3.4, 4.4.1, 4.4.7, 5.2, 6.2.2, 7, 8.3.1, 9.2, 9.3, 9.4, 9.5, 9.7, 9.8, 9.9, 10.2.6, 10.3, 11.3, 11.4.7, 12, 13.4.2, 13.5
Contractor's Representations
1.5.2, 3.5.1, 3.12.6, 6.2.2, 8.2.1, 9.3.3, 9.8.2
Contractor's Responsibility for Those Performing the Work
3.3.2, 3.18, 4.3.8, 5.3.1, 6.1.3, 6.2, 6.3, 9.5.1, 10
Contractor's Review of Contract Documents
1.5.2, 3.2, 3.7.3
Contractor's Right to Stop the Work
9.7
Contractor's Right to Terminate the Contract
4.3.10, 14.1
Contractor's Submittals
3.10, 3.11, 3.12, 4.2.7, 5.2.1, 5.2.3, 7.3.6, 9.2, 9.3, 9.8.2, 9.8.3, 9.9.1, 9.10.2, 9.10.3, 11.1.3, 11.5.2
Contractor's Superintendent
3.9, 10.2.6
Contractor's Supervision and Construction Procedures
1.2.2, 3.3, 3.4, 3.12.10, 4.2.2, 4.2.7, 4.3.3, 6.1.3, 6.2.4, 7.1.3, 7.3.4, 7.3.6, 8.2, 10, 12, 14
Contractual Liability Insurance
11.1.1.8, 11.2, 11.3
Coordination and Correlation
1.2, 1.5.2, 3.3.1, 3.10, 3.12.6, 6.1.3, 6.2.1
Copies Furnished of Drawings and Specifications
1.6, 2.2.5, 3.11
Copyrights
1.6, 3.17
Correction of Work
2.3, 2.4, 3.7.4, 4.2.1, 9.4.2, 9.8.2, 9.8.3, 9.9.1, 12.1.2, 12.2, 13.7.1.3
Correlation and Intent of the Contract Documents
1.2
Cost, Definition of
7.3.6
Costs
2.4, 3.2.3, 3.7.4, 3.8.2, 3.15.2, 4.3, 5.4.2, 6.1.1, 6.2.3, 7.3.3.3, 7.3.6, 7.3.7, 7.3.8, 9.10.2, 10.3.2, 10.5, 11.3, 11.4, 12.1, 12.2.1, 12.2.4, 13.5, 14
Cutting and Patching
3.14, 6.2.5

Damage to Construction of Owner or Separate Contractors
3.14.2, 6.2.4, 10.2.1.2, 10.2.5, 10.6, 11.1, 11.4, 12.2.4
Damage to the Work
3.14.2, 9.9.1, 10.2.1.2, 10.2.5, 10.6, 11.4, 12.2.4
Damages, Claims for
3.2.3, 3.18, 4.3.10, 6.1.1, 8.3.3, 9.5.1, 9.6.7, 10.3.3, 11.1.1, 11.4.5, 11.4.7, 14.1.3, 14.2.4
Damages for Delay
6.1.1, 8.3.3, 9.5.1.6, 9.7, 10.3.2
Date of Commencement of the Work, Definition of
8.1.2
Date of Substantial Completion, Definition of
8.1.3
Day, Definition of
8.1.4
Decisions of the Architect
4.2.6, 4.2.7, 4.2.11, 4.2.12, 4.2.13, 4.3.4, 4.4.1, 4.4.5, 4.4.6, 4.5, 6.3, 7.3.6, 7.3.8, 8.1.3, 8.3.1, 9.2, 9.4, 9.5.1, 9.8.4, 9.9.1, 13.5.2, 14.2.2, 14.2.4
Decisions to Withhold Certification
9.4.1, **9.5**, 9.7, 14.1.1.3
Defective or Nonconforming Work, Acceptance, Rejection and Correction of
2.3, 2.4, 3.5.1, 4.2.6, 6.2.5, 9.5.1, 9.5.2, 9.6.6, 9.8.2, 9.9.3, 9.10.4, 12.2.1, 13.7.1.3
Defective Work, Definition of
3.5.1
Definitions
1.1, 2.1.1, 3.1, 3.5.1, 3.12.1, 3.12.2, 3.12.3, 4.1.1, 4.3.1, 5.1, 6.1.2, 7.2.1, 7.3.1, 8.1, 9.1, 9.8.1
Delays and Extensious of Time
3.2.3, 4.3.1, 4.3.4, 4.3.7, 4.4.5, 5.2.3, 7.2.1, 7.3.1, 7.4.1, **8.3**, 9.5.1, 9.7.1, 10.3.2, 10.6.1, 14.3.2
Disputes
4.3, 4.4, 4.5, 4.6, 6.3, 7.3.8
Documents and Samples at the Site
3.11
Drawings, Definition of
1.1.5
Drawings and Specifications, Use and Ownership of
1.1.1, 2.2.5, 3.11, 5.3

Effective Date of Insurance
8.2.2, 11.1.2
Emergencies
4.3.5, **10.6**, 14.1.1.2

AIA Document A201™ – 1997 Copyright © 1888, 1911, 1915, 1918, 1925, 1937, 1951, 1958, 1961, 1963, 1966, 1970, 1976, 1987 and 1997 by The American Institute of Architects. All rights reserved. WARNING: This AIA® Document is protected by U.S. Copyright Law and International Treaties. Unauthorized reproduction or distribution of this AIA® Document, or any portion of it, may result in severe civil and criminal penalties, and will be prosecuted to the maximum extent possible under the law. Purchasers are not permitted to reproduce this document. To report copyright violations of AIA Contract Documents, e-mail The American Institute of Architects' legal counsel, copyright@aia.org.

Employees, Contractor's
3.3.2, 3.4.3, 3.8.1, 3.9, 3.18.2, 4.2.3, 4.2.6, 10.2, 10.3, 11.1.1, 11.4.7, 14.1, 14.2.1.1
Equipment, Labor, Materials and
1.1.3, 1.1.6, 3.4, 3.5.1, 3.8.2, 3.8.3, 3.12, 3.13, 3.15.1, 4.2.6, 4.2.7, 5.2.1, 6.2.1, 7.3.6, 9.3.2, 9.3.3, 9.5.1.3, 9.10.2, 10.2.1, 10.2.4, 14.2.1.1, 14.2.1.2
Execution and Progress of the Work
1.1.3, 1.2.1, 1.2.2, 2.2.3, 2.2.5, 3.1, 3.3, 3.4, 3.5, 3.7, 3.10, 3.12, 3.14, 4.2.2, 4.2.3, 4.3.3, 6.2.2, 7.1.3, 7.3.4, 8.2, 9.5, 9.9.1, 10.2, 10.3, 12.2, 14.2, 14.3
Extensions of Time
3.2.3, 4.3.1, 4.3.4, 4.3.7, 4.4.5, 5.2.3, 7.2.1, 7.3, 7.4.1, 9.5.1, 9.7.1, 10.3.2, 10.6.1, 14.3.2

Failure of Payment
4.3.6, 9.5.1.3, **9.7**, 9.10.2, 14.1.1.3, 14.2.1.2, 13.6
Faulty Work
(*See* Defective or Nonconforming Work)
Final Completion and Final Payment
4.2.1, 4.2.9, 4.3.2, 9.8.2, **9.10**, 11.1.2, 11.1.3, 11.4.1, 11.4.5, 12.3.1, 13.7, 14.2.4, 14.4.3
Financial Arrangements, Owner's
2.2.1, 13.2.2, 14.1.1.4
Fire and Extended Coverage Insurance
11.4

GENERAL PROVISIONS
1
Governing Law
13.1
Guarantees (*See* Warranty)

Hazardous Materials
10.2.4, **10.3**, 10.5

Identification of Contract Documents
1.5.1
Identification of Subcontractors and Suppliers
5.2.1
Indemnification
3.17, **3.18**, 9.10.2, 10.3.3, 10.5, 11.4.1.2, 11.4.7
Information and Services Required of the Owner
2.1.2, **2.2**, 3.2.1, 3.12.4, 3.12.10, 4.2.7, 4.3.3, 6.1.3, 6.1.4, 6.2.5, 9.3.2, 9.6.1, 9.6.4, 9.9.2, 9.10.3, 10.3.3, 11.2, 11.4, 13.5.1, 13.5.2, 14.1.1.4, 14.1.4
Injury or Damage to Person or Property
4.3.8, 10.2, 10.6
Inspections
3.1.3, 3.3.3, 3.7.1, 4.2.2, 4.2.6, 4.2.9, 9.4.2, 9.8.2, 9.8.3, 9.9.2, 9.10.1, 12.2.1, 13.5
Instructions to Bidders
1.1.1
Instructions to the Contractor
3.2.3, 3.3.1, 3.8.1, 4.2.8, 5.2.1, 7, 12, 8.2.2, 13.5.2
Insurance
3.18.1, 6.1.1, 7.3.6, 9.3.2, 9.8.4, 9.9.1, 9.10.2, 11
Insurance, Boiler and Machinery
11.4.2
Insurance, Contractor's Liability
11.1
Insurance, Effective Date of
8.2.2, 11.1.2
Insurance, Loss of Use
11.4.3
Insurance, Owner's Liability
11.2
Insurance, Project Management Protective Liability
11.3
Insurance, Property
10.2.5, **11.4**
Insurance, Stored Materials
9.3.2, 11.4.1.4
INSURANCE AND BONDS
11
Insurance Companies, Consent to Partial Occupancy
9.9.1, 11.4.1.5
Insurance Companies, Settlement with
11.4.10
Intent of the Contract Documents
1.2.1, 4.2.7, 4.2.12, 4.2.13, 7.4
Interest
13.6
Interpretation
1.2.3, **1.4**, 4.1.1, 4.3.1, 5.1, 6.1.2, 8.1.4
Interpretations, Written
4.2.11, 4.2.12, 4.3.6

Joinder and Consolidation of Claims Required
4.6.4
Judgment on Final Award
4.6.6

Labor and Materials, Equipment
1.1.3, 1.1.6, **3.4**, 3.5.1, 3.8.2, 3.8.3, 3.12, 3.13, 3.15.1, 4.2.6, 4.2.7, 5.2.1, 6.2.1, 7.3.6, 9.3.2, 9.3.3, 9.5.1.3, 9.10.2, 10.2.1, 10.2.4, 14.2.1.1, 14.2.1.2
Labor Disputes
8.3.1
Laws and Regulations
1.6, 3.2.2, 3.6, 3.7, 3.12.10, 3.13, 4.1.1, 4.4.8, 4.6, 9.6.4, 9.9.1, 10.2.2, 11.1, 11.4, 13.1, 13.4, 13.5.1, 13.5.2, 13.6, 14

AIA Document A201™ – 1997 Copyright © 1888, 1911, 1915, 1918, 1925, 1937, 1951, 1958, 1961, 1963, 1966, 1970, 1976, 1987 and 1997 by The American Institute of Architects. All rights reserved. WARNING: This AIA® Document is protected by U.S. Copyright Law and International Treaties. Unauthorized reproduction or distribution of this AIA® Document, or any portion of it, may result in severe civil and criminal penalties, and will be prosecuted to the maximum extent possible under the law. Purchasers are not permitted to reproduce this document. To report copyright violations of AIA Contract Documents, e-mail The American Institute of Architects' legal counsel, copyright@aia.org.

Liens
2.1.2, 4.4.8, 8.2.2, 9.3.3, 9.10
Limitation on Consolidation or Joinder
4.6.4
Limitations, Statutes of
4.6.3, 12.2.5, 13.7
Limitations of Liability
2.3, 3.2.1, 3.5.1, 3.7.3, 3.12.8, 3.12.10, 3.17, 3.18, 4.2.6, 4.2.7, 4.2.12, 6.2.2, 9.4.2, 9.6.4, 9.6.7, 9.10.4, 10.2.5, 10.3.3, 11.1.2, 11.2.1, 11.4.7, 12.2.5, 13.4.2
Limitations of Time
2.1.2, 2.2, 2.4, 3.2.1, 3.7.3, 3.10, 3.11, 3.12.5, 3.15.1, 4.2.7, 4.3, 4.4, 4.5, 4.6, 5.2, 5.3, 5.4, 6.2.4, 7.3, 7.4, 8.2, 9.2, 9.3.1, 9.3.3, 9.4.1, 9.5, 9.6, 9.7, 9.8, 9.9, 9.10, 11.1.3, 11.4.1.5, 11.4.6, 11.4.10, 12.2, 13.5, 13.7, 14
Loss of Use Insurance
11.4.3

Material Suppliers
1.6, 3.12.1, 4.2.4, 4.2.6, 5.2.1, 9.3, 9.4.2, 9.6, 9.10.5
Materials, Hazardous
10.2.4, **10.3**, 10.5
Materials, Labor, Equipment and
1.1.3, 1.1.6, 1.6.1, 3.4, 3.5.1, 3.8.2, 3.8.3, 3.12, 3.13, 3.15.1, 4.2.6, 4.2.7, 5.2.1, 6.2.1, 7.3.6, 9.3.2, 9.3.3, 9.5.1.3, 9.10.2, 10.2.1, 10.2.4, 14.2.1.1, 14.2.1.2
Means, Methods, Techniques, Sequences and Procedures of Construction
3.3.1, 3.12.10, 4.2.2, 4.2.7, 9.4.2
Mechanic's Lien
4.4.8, 2.1.2, 8.2.2
Mediation
4.4.1, 4.4.5, 4.4.6, 4.4.8, **4.5**, 4.6.1, 4.6.2, 8.3.1
Minor Changes in the Work
1.1.1, 3.12.8, 4.2.8, 4.3.6, 7.1, **7.4**
MISCELLANEOUS PROVISIONS
13
Modifications, Definition of
1.1.1
Modifications to the Contract
1.1.1, 1.1.2, 3.7.3, 3.11, 4.1.2, 4.2.1, 5.2.3, 7, 8.3.1, 9.7, 10.3.2, 11.4.1
Mutual Responsibility
6.2

Nonconforming Work, Acceptance of
9.6.6, 9.9.3, **12.3**
Nonconforming Work, Rejection and Correction of
2.3, 2.4, 3.5.1, 4.2.6, 6.2.5, 9.5.1, 9.8.2, 9.9.3, 9.10.4, 12.2.1, 13.7.1.3
Notice
2.2.1, 2.3, 2.4, 3.2.3, 3.3.1, 3.7.2, 3.7.4, 3.12.9, 4.3, 4.4.8, 4.6.5, 5.2.1, 8.2.2, 9.7, 9.10, 10.2.2, 11.1.3, 11.4.6, 12.2.2, 13.3, 13.5.1, 13.5.2, 14.1, 14.2
Notice, Written
2.3, 2.4, 3.3.1, 3.9, 3.12.9, 3.12.10, 4.3, 4.4.8, 4.6.5, 5.2.1, 8.2.2, 9.7, 9.10, 10.2.2, 10.3, 11.1.3, 11.4.6, 12.2.2, **13.3**, 14
Notice of Testing and Inspections
13.5.1, 13.5.2
Notice to Proceed
8.2.2
Notices, Permits, Fees and
2.2.2, **3.7**, 3.13, 7.3.6.4, 10.2.2

Observations, Contractor's
1.5.2, 3.2, 3.7.3, 4.3.4
Occupancy
2.2.2, 9.6.6, 9.8, 11.4.1.5
Orders, Written
1.1.1, 2.3, 3.9, 4.3.6, 7, 8.2.2, 11.4.9, 12.1, 12.2, 13.5.2, 14.3.1
OWNER
2
Owner, Definition of
2.1
Owner, Information and Services Required of the
2.1.2, **2.2**, 3.2.1, 3.12.10, 4.3.3, 6.1.3, 6.1.4, 6.2.5, 9.3.2, 9.6.1, 9.6.4, 9.9.2, 9.10.3, 10.3.3, 11.2, 11.4, 13.5.1, 13.5.2, 14.1.1.4, 14.1.4
Owner's Authority
1.6, 2.1.1, 2.3, 2.4, 3.4.2, 3.8.1, 3.12.10, 3.14.2, 4.1.2, 4.1.3, 4.2.4, 4.2.9, 4.3.6, 4.4.7, 5.2.1, 5.2.4, 5.4.1, 6.1, 6.3, 7.2.1, 7.3.1, 8.2.2, 8.3.1, 9.3.1, 9.3.2, 9.5.1, 9.9.1, 9.10.2, 10.3.2, 11.1.3, 11.3.1, 11.4.3, 11.4.10, 12.2.2, 12.3.1, 13.2.2, 14.3, 14.4
Owner's Financial Capability
2.2.1, 13.2.2, 14.1.1.4
Owner's Liability Insurance
11.2
Owner's Loss of Use Insurance
11.4.3
Owner's Relationship with Subcontractors
1.1.2, 5.2, 5.3, 5.4, 9.6.4, 9.10.2, 14.2.2
Owner's Right to Carry Out the Work
2.4, 14.2.2
Owner's Right to Clean Up
6.3
Owner's Right to Perform Construction and to Award Separate Contracts
6.1
Owner's Right to Stop the Work
2.3
Owner's Right to Suspend the Work
14.3
Owner's Right to Terminate the Contract
14.2
Ownership and Use of Drawings, Specifications and Other Instruments of Service
1.1.1, **1.6**, 2.2.5, 3.2.1, 3.11.1, 3.17.1, 4.2.12, 5.3

AIA Document A201™ – 1997 Copyright © 1888, 1911, 1915, 1918, 1925, 1937, 1951, 1958, 1961, 1963, 1966, 1970, 1976, 1987 and 1997 by The American Institute of Architects. All rights reserved. WARNING: This AIA® Document is protected by U.S. Copyright Law and International Treaties. Unauthorized reproduction or distribution of this AIA® Document, or any portion of it, may result in severe civil and criminal penalties, and will be prosecuted to the maximum extent possible under the law. Purchasers are not permitted to reproduce this document. To report copyright violations of AIA Contract Documents, e-mail The American Institute of Architects' legal counsel, copyright@aia.org.

Partial Occupancy or Use
9.6.6, **9.9**, 11.4.1.5
Patching, Cutting and
3.14, 6.2.5
Patents
3.17
Payment, Applications for
4.2.5, 7.3.8, 9.2, **9.3**, 9.4, 9.5.1, 9.6.3, 9.7.1, 9.8.5, 9.10.1, 9.10.3, 9.10.5, 11.1.3, 14.2.4, 14.4.3
Payment, Certificates for
4.2.5, 4.2.9, 9.3.3, **9.4**, 9.5, 9.6.1, 9.6.6, 9.7.1, 9.10.1, 9.10.3, 13.7, 14.1.1.3, 14.2.4
Payment, Failure of
4.3.6, 9.5.1.3, **9.7**, 9.10.2, 13.6, 14.1.1.3, 14.2.1.2,
Payment, Final
4.2.1, 4.2.9, 9.8.2, 9.10, 11.1.2, 11.1.3, 11.4.1, 11.4.5, 12.3.1, 13.7, 14.2.4, 14.4.3
Payment Bond, Performance Bond and
7.3.6.4, 9.6.7, 9.10.3, 11.4.9, **11.5**
Payments, Progress
4.3.3, 9.3, **9.6**, 9.8.5, 9.10.3, 13.6, 14.2.3
PAYMENTS AND COMPLETION
9
Payments to Subcontractors
5.4.2, 9.5.1.3, 9.6.2, 9.6.3, 9.6.4, 9.6.7, 11.4.8, 14.2.1.2
PCB
10.3.1
Performance Bond and Payment Bond
7.3.6.4, 9.6.7, 9.10.3, 11.4.9, **11.5**
Permits, Fees and Notices
2.2.2, **3.7**, 3.13, 7.3.6.4, 10.2.2
PERSONS AND PROPERTY, PROTECTION OF
10
Polychlorinated Biphenyl
10.3.1
Product Data, Definition of
3.12.2
Product Data and Samples, Shop Drawings
3.11, **3.12**, 4.2.7
Progress and Completion
4.2.2, 4.3.3, **8.2**, 9.8, 9.9.1, 14.1.4
Progress Payments
4.3.3, 9.3, **9.6**, 9.8.5, 9.10.3, 13.6, 14.2.3
Project, Definition of the
1.1.4
Project Management Protective Liability Insurance
11.3
Project Manual, Definition of the
1.1.7
Project Manuals
2.2.5
Project Representatives
4.2.10
Property Insurance
10.2.5, **11.4**
PROTECTION OF PERSONS AND PROPERTY
10

Regulations and Laws
1.6, 3.2.2, 3.6, 3.7, 3.12.10, 3.13, 4.1.1, 4.4.8, 4.6, 9.6.4, 9.9.1, 10.2.2, 11.1, 11.4, 13.1, 13.4, 13.5.1, 13.5.2, 13.6, 14
Rejection of Work
3.5.1, 4.2.6, 12.2.1
Releases and Waivers of Liens
9.10.2
Representations
1.5.2, 3.5.1, 3.12.6, 6.2.2, 8.2.1, 9.3.3, 9.4.2, 9.5.1, 9.8.2, 9.10.1
Representatives
2.1.1, 3.1.1, 3.9, 4.1.1, 4.2.1, 4.2.2, 4.2.10, 5.1.1, 5.1.2, 13.2.1
Resolution of Claims and Disputes
4.4, 4.5, 4.6
Responsibility for Those Performing the Work
3.3.2, 3.18, 4.2.3, 4.3.8, 5.3.1, 6.1.3, 6.2, 6.3, 9.5.1, 10
Retainage
9.3.1, 9.6.2, 9.8.5, 9.9.1, 9.10.2, 9.10.3
Review of Contract Documents and Field Conditions by Contractor
1.5.2, **3.2**, 3.7.3, 3.12.7, 6.1.3
Review of Contractor's Submittals by Owner and Architect
3.10.1, 3.10.2, 3.11, 3.12, 4.2, 5.2, 6.1.3, 9.2, 9.8.2
Review of Shop Drawings, Product Data and Samples by Contractor
3.12
Rights and Remedies
1.1.2, 2.3, 2.4, 3.5.1, 3.15.2, 4.2.6, 4.3.4, 4.5, 4.6, 5.3, 5.4, 6.1, 6.3, 7.3.1, 8.3, 9.5.1, 9.7, 10.2.5, 10.3, 12.2.2, 12.2.4, **13.4**, 14
Royalties, Patents and Copyrights
3.17
Rules and Notices for Arbitration
4.6.2

Safety of Persons and Property
10.2, 10.6
Safety Precautions and Programs
3.3.1, 4.2.2, 4.2.7, 5.3.1, **10.1**, 10.2, 10.6
Samples, Definition of
3.12.3
Samples, Shop Drawings, Product Data and
3.11, **3.12**, 4.2.7
Samples at the Site, Documents and
3.11

AIA Document A201™ – 1997 Copyright © 1888, 1911, 1915, 1918, 1925, 1937, 1951, 1958, 1961, 1963, 1966, 1970, 1976, 1987 and 1997 by The American Institute of Architects. All rights reserved. WARNING: This AIA® Document is protected by U.S. Copyright Law and International Treaties. Unauthorized reproduction or distribution of this AIA® Document, or any portion of it, may result in severe civil and criminal penalties, and will be prosecuted to the maximum extent possible under the law. Purchasers are not permitted to reproduce this document. To report copyright violations of AIA Contract Documents, e-mail The American Institute of Architects' legal counsel, copyright@aia.org.

Schedule of Values
9.2, 9.3.1
Schedules, Construction
1.4.1.2, 3.10, 3. 12.1, 3.12.2, 4.3.7.2, 6.1.3
Separate Contracts and Contractors
1.1.4, 3.12.5, 3.14.2, 4.2.4, 4.2.7, 4.6.4, 6, 8.3.1, 11.4.7, 12.1.2
Shop Drawings, Definition of
3.12.1
Shop Drawings, Product Data and Samples
3.11, **3.12**, 4.2.7
Site, Use of
3.13, 6.1.1, 6.2.1
Site Inspections
3.2.1, 3.3.3, 3.7.1, 4.2, 4.3.4, 9.4.2, 9.10.1, 13.5
Site Visits, Architect's
4.2.2, 4.2.9, 4.3.4, 9.4.2, 9.5.1, 9.9.2, 9.10.1, 13.5
Special Inspections and Testing
4.2.6, 12.2.1, 13.5
Specifications, Definition of the
1.1.6
Specifications, The
1.1.1, **1.1.6**, 1.1.7, 1.2.2, 1.6, 3.11, 3.12.10, 3.17
Statute of Limitations
4.6.3, 13.7
Stopping the Work
2.3, 4.3.6, 9.7, 10.3, 14.1
Stored Materials
6.2.1, 9.3.2, 10.2.1.2, 10.2.4, 11.4.1.4
Subcontractor, Definition of
5.1.1
SUBCONTRACTORS
5
Subcontractors, Work by
1.2.2, 3.3.2, 3.12.1, 4.2.3, 5.2.3, 5.3, 5.4, 9.3.1.2, 9.6.7
Subcontractual Relations
5.3, 5.4, 9.3.1.2, 9.6, 9.10 10.2.1, 11.4.7, 11.4.8, 14.1, 14.2.1
Submittals
1.6, 3.10, 3.11, 3.12, 4.2.7, 5.2.1, 5.2.3, 7.3.6, 9.2, 9.3, 9.8, 9.9.1, 9.10.2, 9.10.3, 11.1.3
Subrogation, Waivers of
6.1.1, 11.4.5, **11.4.7**
Substantial Completion
4.2.9, 8.1.1, 8.1.3, 8.2.3, 9.4.2, **9.8**, 9.9.1, 9.10.3, 12.2, 13.7
Substantial Completion, Definition of
9.8.1
Substitution of Subcontractors
5.2.3, 5.2.4
Substitution of Architect
4.1.3
Substitutions of Materials
3.4.2, 3.5.1, 7.3.7
Sub-subcontractor, Definition of
5.1.2
Subsurface Conditions
4.3.4
Successors and Assigns
13.2
Superintendent
3.9, 10.2.6
Supervision and Constructiou Procedures
1.2.2, **3.3**, 3.4, 3.12.10, 4.2.2, 4.2.7, 4.3.3, 6.1.3, 6.2.4, 7.1.3, 7.3.6, 8.2, 8.3.1, 9.4.2, 10, 12, 14
Surety
4.4.7, 5.4.1.2, 9.8.5, 9.10.2, 9.10.3, 14.2.2
Surety, Consent of
9.10.2, 9.10.3
Surveys
2.2.3
Suspension by the Owner for Convenience
14.4
Suspension of the Work
5.4.2, 14.3
Suspension or Termination of the Contract
4.3.6, 5.4.1.1, 11.4.9, 14

Taxes
3.6, 3.8.2.1, 7.3.6.4
Termination by the Contractor
4.3.10, **14.1**
Termination by the Owner for Cause
4.3.10, 5.4.1.1, **14.2**
Termination of the Architect
4.1.3
Termination of the Contractor
14.2.2
TERMINATION OR SUSPENSION OF THE CONTRACT
14
Tests and Inspections
3.1.3, 3.3.3, 4.2.2, 4.2.6, 4.2.9, 9.4.2, 9.8.3, 9.9.2, 9.10.1, 10.3.2, 11.4.1.1, 12.2.1,**13.5**
TIME
8
Time, Delays and Exteusions of
3.2.3, 4.3.1, 4.3.4, 4.3.7, 4.4.5, 5.2.3, 7.2.1, 7.3.1, 7.4.1, **8.3**, 9.5.1, 9.7.1, 10.3.2, 10.6.1, 14.3.2
Time Limits
2.1.2, 2.2, 2.4, 3.2.1, 3.7.3, 3.10, 3.11, 3.12.5, 3.15.1, 4.2, 4.3, 4.4, 4.5, 4.6, 5.2, 5.3, 5.4, 6.2.4, 7.3, 7.4, 8.2, 9.2, 9.3.1, 9.3.3, 9.4.1, 9.5, 9.6, 9.7, 9.8, 9.9, 9.10, 11.1.3, 11.4.1.5, 11.4.6, 11.4.10, 12.2, 13.5, 13.7, 14
Time Limits on Claims
4.3.2, 4.3.4, 4.3.8, 4.4, 4.5, 4.6
Title to Work
9.3.2, 9.3.3

AIA Document A201™ – 1997 Copyright © 1888, 1911, 1915, 1918, 1925, 1937, 1951, 1958, 1961, 1963, 1966, 1970, 1976, 1987 and 1997 by The American Institute of Architects. All rights reserved. WARNING: This AIA® Document is protected by U.S. Copyright Law and International Treaties. Unauthorized reproduction or distribution of this AIA® Document, or any portion of it, may result in severe civil and criminal penalties, and will be prosecuted to the maximum extent possible under the law. Purchasers are not permitted to reproduce this document. To report copyright violations of AIA Contract Documents, e-mail The American Institute of Architects' legal counsel, copyright@aia.org.

UNCOVERING AND CORRECTION OF WORK
12
Uncovering of Work
12.1
Unforeseen Conditions
4.3.4, 8.3.1, 10.3
Unit Prices
4.3.9, 7.3.3.2
Use of Docnments
1.1.1, 1.6, 2.2.5, 3.12.6, 5.3
Use of Site
3.13, 6.1.1, 6.2.1

Values, Schedule of
9.2, 9.3.1

Waiver of Claims by the Architect
13.4.2
Waiver of Claims by the Contractor
4.3.10, 9.10.5, 11.4.7, 13.4.2
Waiver of Claims by the Owner
4.3.10, 9.9.3, 9.10.3, 9.10.4, 11.4.3, 11.4.5, 11.4.7, 12.2.2.1, 13.4.2, 14.2.4
Waiver of Consequential Damages
4.3.10, 14.2.4
Waiver of Liens
9.10.2, 9.10.4
Waivers of Subrogation
6.1.1, 11.4.5, **11.4.7**
Warranty
3.5, 4.2.9, 9.3.3, 9.8.4, 9.9.1, 9.10.4, 12.2.2, 13.7.1.3
Weather Delays
4.3.7.2
Work, Definition of
1.1.3
Written Consent
1.6, 3.4.2, 3.12.8, 3.14.2, 4.1.2, 4.3.4, 4.6.4, 9.3.2, 9.8.5, 9.9.1, 9.10.2, 9.10.3, 11.4.1, 13.2, 13.4.2
Written Interpretations
4.2.11, 4.2.12, 4.3.6
Written Notice 2.3, 2.4, 3.3.1, 3.9, 3.12.9, 3.12.10, 4.3, 4.4.8, 4.6.5, 5.2.1, 8.2.2, 9.7, 9.10, 10.2.2, 10.3, 11.1.3, 11.4.6, 12.2.2, 12.2.4, **13.3**, 14
Written Orders
1.1.1, 2.3, 3.9, 4.3.6, 7, 8.2.2, 11.4.9, 12.1, 12.2, 13.5.2, 14.3.1

AIA Document A201™ – 1997 Copyright © 1888, 1911, 1915, 1918, 1925, 1937, 1951, 1958, 1961, 1963, 1966, 1970, 1976, 1987 and 1997 by The American Institute of Architects. All rights reserved. WARNING: This AIA® Document is protected by U.S. Copyright Law and International Treaties. Unauthorized reproduction or distribution of this AIA® Document, or any portion of it, may result in severe civil and criminal penalties, and will be prosecuted to the maximum extent possible under the law. Purchasers are not permitted to reproduce this document. To report copyright violations of AIA Contract Documents, e-mail The American Institute of Architects' legal counsel, copyright@aia.org.

ARTICLE 1 GENERAL PROVISIONS

§ 1.1 BASIC DEFINITIONS

§ 1.1.1 THE CONTRACT DOCUMENTS

The Contract Documents consist of the Agreement between Owner and Contractor (hereinafter the Agreement), Conditions of the Contract (General, Supplementary and other Conditions), Drawings, Specifications, Addenda issued prior to execution of the Contract, other documents listed in the Agreement and Modifications issued after execution of the Contract. A Modification is (1) a written amendment to the Contract signed by both parties, (2) a Change Order, (3) a Construction Change Directive or (4) a written order for a minor change in the Work issued by the Architect. Unless specifically enumerated in the Agreement, the Contract Documents do not include other documents such as bidding requirements (advertisement or invitation to bid, Instructions to Bidders, sample forms, the Contractor's bid or portions of Addenda relating to bidding requirements).

§ 1.1.2 THE CONTRACT

The Contract Documents form the Contract for Construction. The Contract represents the entire and integrated agreement between the parties hereto and supersedes prior negotiations, representations or agreements, either written or oral. The Contract may be amended or modified only by a Modification. The Contract Documents shall not be construed to create a contractual relationship of any kind (1) between the Architect and Contractor, (2) between the Owner and a Subcontractor or Sub-subcontractor, (3) between the Owner and Architect or (4) between any persons or entities other than the Owner and Contractor. The Architect shall, however, be entitled to performance and enforcement of obligations under the Contract intended to facilitate performance of the Architect's duties.

§ 1.1.3 THE WORK

The term "Work" means the construction and services required by the Contract Documents, whether completed or partially completed, and includes all other labor, materials, equipment and services provided or to be provided by the Contractor to fulfill the Contractor's obligations. The Work may constitute the whole or a part of the Project.

§ 1.1.4 THE PROJECT

The Project is the total construction of which the Work performed under the Contract Documents may be the whole or a part and which may include construction by the Owner or by separate contractors.

§ 1.1.5 THE DRAWINGS

The Drawings are the graphic and pictorial portions of the Contract Documents showing the design, location and dimensions of the Work, generally including plans, elevations, sections, details, schedules and diagrams.

§ 1.1.6 THE SPECIFICATIONS

The Specifications are that portion of the Contract Documents consisting of the written requirements for materials, equipment, systems, standards and workmanship for the Work, and performance of related services.

§ 1.1.7 THE PROJECT MANUAL

The Project Manual is a volume assembled for the Work which may include the bidding requirements, sample forms, Conditions of the Contract and Specifications.

§ 1.2 CORRELATION AND INTENT OF THE CONTRACT DOCUMENTS

§ 1.2.1 The intent of the Contract Documents is to include all items necessary for the proper execution and completion of the Work by the Contractor. The Contract Documents are complementary, and what is required by one shall be as binding as if required by all; performance by the Contractor shall be required only to the extent consistent with the Contract Documents and reasonably inferable from them as being necessary to produce the indicated results.

§ 1.2.2 Organization of the Specifications into divisions, sections and articles, and arrangement of Drawings shall not control the Contractor in dividing the Work among Subcontractors or in establishing the extent of Work to be performed by any trade.

§ 1.2.3 Unless otherwise stated in the Contract Documents, words which have well-known technical or construction industry meanings are used in the Contract Documents in accordance with such recognized meanings.

§ 1.3 CAPITALIZATION

§ 1.3.1 Terms capitalized in these General Conditions include those which are (1) specifically defined, (2) the titles of numbered articles or (3) the titles of other documents published by the American Institute of Architects.

AIA Document A201™ – 1997 Copyright © 1888, 1911, 1915, 1918, 1925, 1937, 1951, 1958, 1961, 1963, 1966, 1970, 1976, 1987 and 1997 by The American Institute of Architects. All rights reserved. WARNING: This AIA® Document is protected by U.S. Copyright Law and International Treaties. Unauthorized reproduction or distribution of this AIA® Document, or any portion of it, may result in severe civil and criminal penalties, and will be prosecuted to the maximum extent possible under the law. Purchasers are not permitted to reproduce this document. To report copyright violations of AIA Contract Documents, e-mail The American Institute of Architects' legal counsel, copyright@aia.org.

§ 1.4 INTERPRETATION

§ 1.4.1 In the interest of brevity the Contract Documents frequently omit modifying words such as "all" and "any" and articles such as "the" and "an," but the fact that a modifier or an article is absent from one statement and appears in another is not intended to affect the interpretation of either statement.

§ 1.5 EXECUTION OF CONTRACT DOCUMENTS

§ 1.5.1 The Contract Documents shall be signed by the Owner and Contractor. If either the Owner or Contractor or both do not sign all the Contract Documents, the Architect shall identify such unsigned Documents upon request.

§ 1.5.2 Execution of the Contract by the Contractor is a representation that the Contractor has visited the site, become generally familiar with local conditions under which the Work is to he performed and correlated personal observations with requirements of the Contract Documents.

§ 1.6 OWNERSHIP AND USE OF DRAWINGS, SPECIFICATIONS AND OTHER INSTRUMENTS OF SERVICE

§ 1.6.1 The Drawings, Specifications and other documents, including those in electronic form, prepared by the Architect and the Architect's consultants are Instruments of Service through which the Work to be executed by the Contractor is described. The Contractor may retain one record set. Neither the Contractor nor any Subcontractor, Sub-subcontractor or material or equipment supplier shall own or claim a copyright in the Drawings, Specifications and other documents prepared by the Architect or the Architect's consultants, and unless otherwise indicated the Architect and the Architect's consultants shall be deemed the authors of them and will retain all common law, statutory and other reserved rights, in addition to the copyrights. All copies of Instruments of Service, except the Contractor's record set, shall be returned or suitably accounted for to the Architect, on request, upon completion of the Work. The Drawings, Specifications and other documents prepared by the Architect and the Architect's consultants, and copies thereof furnished to the Contractor, are for use solely with respect to this Project. They are not to be used by the Contractor or any Subcontractor, Sub-subcontractor or material or equipment supplier on other projects or for additions to this Project outside the scope of the Work without the specific written consent of the Owner, Architect and the Architect's consultants. The Contractor, Subcontractors, Sub-subcontractors and material or equipment suppliers are authorized to use and reproduce applicable portions of the Drawings, Specifications and other documents prepared by the Architect and the Architect's consultants appropriate to and for use in the execution of their Work under the Contract Documents. All copies made under this authorization shall bear the statutory copyright notice, if any, shown on the Drawings, Specifications and other documents prepared by the Architect and the Architect's consultants. Submittal or distribution to meet official regulatory requirements or for other purposes in connection with this Project is not to be construed as publication in derogation of the Architect's or Architect's consultants' copyrights or other reserved rights.

ARTICLE 2 OWNER

§ 2.1 GENERAL

§ 2.1.1 The Owner is the person or entity identified as such in the Agreement and is referred to throughout the Contract Documents as if singular in number. The Owner shall designate in writing a representative who shall have express authority to bind the Owner with respect to all matters requiring the Owner's approval or authorization. Except as otherwise provided in Section 4.2.1, the Architect does not have such authority. The term "Owner" means the Owner or the Owner's authorized representative.

§ 2.1.2 The Owner shall furnish to the Contractor within fifteen days after receipt of a written request, information necessary and relevant for the Contractor to evaluate, give notice of or enforce mechanic's lien rights. Such information shall include a correct statement of the record legal title to the property on which the Project is located, usually referred to as the site, and the Owner's interest therein.

§ 2.2 INFORMATION AND SERVICES REQUIRED OF THE OWNER

§ 2.2.1 The Owner shall, at the written request of the Contractor, prior to commencement of the Work and thereafter, furnish to the Contractor reasonable evidence that financial arrangements have been made to fulfill the Owner's obligations under the Contract. Furnishing of such evidence shall he a condition precedent to commencement or continuation of the Work. After such evidence has been furnished, the Owner shall not materially vary such financial arrangements without prior notice to the Contractor.

§ 2.2.2 Except for permits and fees, including those required under Section 3.7.1, which are the responsibility of the Contractor under the Contract Documents, the Owner shall secure and pay for necessary approvals, easements, assessments and charges required for construction, use or occupancy of permanent structures or for permanent changes in existing facilities.

AIA Document A201™ – 1997 Copyright © 1888, 1911, 1915, 1918, 1925, 1937, 1951, 1958, 1961, 1963, 1966, 1970, 1976, 1987 and 1997 by The American Institute of Architects. **All rights reserved.** WARNING: This AIA® Document is protected by U.S. Copyright Law and International Treaties. Unauthorized reproduction or distribution of this AIA® Document, or any portion of it, may result in severe civil and criminal penalties, and will be prosecuted to the maximum extent possible under the law. Purchasers are not permitted to reproduce this document. To report copyright violations of AIA Contract Documents, e-mail The American Institute of Architects' legal counsel, copyright@aia.org.

§ 2.2.3 The Owner shall furnish surveys describing physical characteristics, legal limitations and utility locations for the site of the Project, and a legal description of the site. The Contractor shall be entitled to rely on the accuracy of information furnished by the Owner but shall exercise proper precautions relating to the safe performance of the Work.

§ 2.2.4 Information or services required of the Owner by the Contract Documents shall be furnished by the Owner with reasonable promptness. Any other information or services relevant to the Contractor's performance of the Work under the Owner's control shall be furnished by the Owner after receipt from the Contractor of a written request for such information or services.

§ 2.2.5 Unless otherwise provided in the Contract Documents, the Contractor will be furnished, free of charge, such copies of Drawings and Project Manuals as are reasonably necessary for execution of the Work.

§ 2.3 OWNER'S RIGHT TO STOP THE WORK

§ 2.3.1 If the Contractor fails to correct Work which is not in accordance with the requirements of the Contract Documents as required by Section 12.2 or persistently fails to carry out Work in accordance with the Contract Documents, the Owner may issue a written order to the Contractor to stop the Work, or any portion thereof, until the cause for such order has been eliminated; however, the right of the Owner to stop the Work shall not give rise to a duty on the part of the Owner to exercise this right for the benefit of the Contractor or any other person or entity, except to the extent required by Section 6.1.3.

§ 2.4 OWNER'S RIGHT TO CARRY OUT THE WORK

§ 2.4.1 If the Contractor defaults or neglects to carry out the Work in accordance with the Contract Documents and fails within a seven-day period after receipt of written notice from the Owner to commence and continue correction of such default or neglect with diligence and promptness, the Owner may after such seven-day period give the Contractor a second written notice to correct such deficiencies within a three-day period. If the Contractor within such three-day period after receipt of such second notice fails to commence and continue to correct any deficiencies, the Owner may, without prejudice to other remedies the Owner may have, correct such deficiencies. In such case an appropriate Change Order shall be issued deducting from payments then or thereafter due the Contractor the reasonable cost of correcting such deficiencies, including Owner's expenses and compensation for the Architect's additional services made necessary by such default, neglect or failure. Such action by the Owner and amounts charged to the Contractor are both subject to prior approval of the Architect. If payments then or thereafter due the Contractor are not sufficient to cover such amounts, the Contractor shall pay the difference to the Owner.

ARTICLE 3 CONTRACTOR

§ 3.1 GENERAL

§ 3.1.1 The Contractor is the person or entity identified as such in the Agreement and is referred to throughout the Contract Documents as if singular in number. The term "Contractor" means the Contractor or the Contractor's authorized representative.

§ 3.1.2 The Contractor shall perform the Work in accordance with the Contract Documents.

§ 3.1.3 The Contractor shall not be relieved of obligations to perform the Work in accordance with the Contract Documents either by activities or duties of the Architect in the Architect's administration of the Contract, or by tests, inspections or approvals required or performed by persons other than the Contractor.

§ 3.2 REVIEW OF CONTRACT DOCUMENTS AND FIELD CONDITIONS BY CONTRACTOR

§ 3.2.1 Since the Contract Documents are complementary, before starting each portion of the Work, the Contractor shall carefully study and compare the various Drawings and other Contract Documents relative to that portion of the Work, as well as the information furnished by the Owner pursuant to Section 2.2.3, shall take field measurements of any existing conditions related to that portion of the Work and shall observe any conditions at the site affecting it. These obligations are for the purpose of facilitating construction by the Contractor and are not for the purpose of discovering errors, omissions, or inconsistencies in the Contract Documents; however, any errors, inconsistencies or omissions discovered by the Contractor shall be reported promptly to the Architect as a request for information in such form as the Architect may require.

§ 3.2.2 Any design errors or omissions noted by the Contractor during this review shall be reported promptly to the Architect, but it is recognized that the Contractor's review is made in the Contractor's capacity as a contractor and not as a licensed design professional unless otherwise specifically provided in the Contract Documents. The

AIA Document A201™ – 1997 Copyright © 1888, 1911, 1915, 1918, 1925, 1937, 1951, 1958, 1961, 1963, 1966, 1970, 1976, 1987 and 1997 by The American Institute of Architects. All rights reserved. WARNING: This AIA® Document is protected by U.S. Copyright Law and International Treaties. Unauthorized reproduction or distribution of this AIA® Document, or any portion of it, may result in severe civil and criminal penalties, and will be prosecuted to the maximum extent possible under the law. Purchasers are not permitted to reproduce this document. To report copyright violations of AIA Contract Documents, e-mail The American Institute of Architects' legal counsel, copyright@aia.org.

Contractor is not required to ascertain that the Contract Documents are in accordance with applicable laws, statutes, ordinances, building codes, and rules and regulations, but any nonconformity discovered by or made known to the Contractor shall be reported promptly to the Architect.

§ 3.2.3 If the Contractor believes that additional cost or time is involved because of clarifications or instructions issued by the Architect in response to the Contractor's notices or requests for information pursuant to Sections 3.2.1 and 3.2.2, the Contractor shall make Claims as provided in Sections 4.3.6 and 4.3.7. If the Contractor fails to perform the obligations of Sections 3.2.1 and 3.2.2, the Contractor shall pay such costs and damages to the Owner as would have been avoided if the Contractor had performed such obligations. The Contractor shall not be liable to the Owner or Architect for damages resulting from errors, inconsistencies or omissions in the Contract Documents or for differences between field measurements or conditions and the Contract Documents unless the Contractor recognized such error, inconsistency, omission or difference and knowingly failed to report it to the Architect.

§ 3.3 SUPERVISION AND CONSTRUCTION PROCEDURES

§ 3.3.1 The Contractor shall supervise and direct the Work, using the Contractor's best skill and attention. The Contractor shall be solely responsible for and have control over construction means, methods, techniques, sequences and procedures and for coordinating all portions of the Work under the Contract, unless the Contract Documents give other specific instructions concerning these matters. If the Contract Documents give specific instructions concerning construction means, methods, techniques, sequences or procedures, the Contractor shall evaluate the jobsite safety thereof and, except as stated below, shall be fully and solely responsible for the jobsite safety of such means, methods, techniques, sequences or procedures. If the Contractor determines that such means, methods, techniques, sequences or procedures may not be safe, the Contractor shall give timely written notice to the Owner and Architect and shall not proceed with that portion of the Work without further written instructions from the Architect. If the Contractor is then instructed to proceed with the required means, methods, techniques, sequences or procedures without acceptance of changes proposed by the Contractor, the Owner shall be solely responsible for any resulting loss or damage.

§ 3.3.2 The Contractor shall be responsible to the Owner for acts and omissions of the Contractor's employees, Subcontractors and their agents and employees, and other persons or entities performing portions of the Work for or on behalf of the Contractor or any of its Subcontractors.

§ 3.3.3 The Contractor shall be responsible for inspection of portions of Work already performed to determine that such portions are in proper condition to receive subsequent Work.

§ 3.4 LABOR AND MATERIALS

§ 3.4.1 Unless otherwise provided in the Contract Documents, the Contractor shall provide and pay for labor, materials, equipment, tools, construction equipment and machinery, water, heat, utilities, transportation, and other facilities and services necessary for proper execution and completion of the Work, whether temporary or permanent and whether or not incorporated or to be incorporated in the Work.

§ 3.4.2 The Contractor may make substitutions only with the consent of the Owner, after evaluation by the Architect and in accordance with a Change Order.

§ 3.4.3 The Contractor shall enforce strict discipline and good order among the Contractor's employees and other persons carrying out the Contract. The Contractor shall not permit employment of unfit persons or persons not skilled in tasks assigned to them.

§ 3.5 WARRANTY

§ 3.5.1 The Contractor warrants to the Owner and Architect that materials and equipment furnished under the Contract will be of good quality and new unless otherwise required or permitted by the Contract Documents, that the Work will be free from defects not inherent in the quality required or permitted, and that the Work will conform to the requirements of the Contract Documents. Work not conforming to these requirements, including substitutions not properly approved and authorized, may be considered defective. The Contractor's warranty excludes remedy for damage or defect caused by abuse, modifications not executed by the Contractor, improper or insufficient maintenance, improper operation, or normal wear and tear and normal usage. If required by the Architect, the Contractor shall furnish satisfactory evidence as to the kind and quality of materials and equipment.

AIA Document A201™ – 1997 Copyright © 1888, 1911, 1915, 1918, 1925, 1937, 1951, 1958, 1961, 1963, 1966, 1970, 1976, 1987 and 1997 by The American Institute of Architects. All rights reserved. WARNING: This AIA® Document is protected by U.S. Copyright Law and International Treaties. Unauthorized reproduction or distribution of this AIA® Document, or any portion of it, may result in severe civil and criminal penalties, and will be prosecuted to the maximum extent possible under the law. Purchasers are not permitted to reproduce this document. To report copyright violations of AIA Contract Documents, e-mail The American Institute of Architects' legal counsel, copyright@aia.org.

§ 3.6 TAXES

§ 3.6.1 The Contractor shall pay sales, consumer, use and similar taxes for the Work provided by tbe Contractor which are legally enacted when bids are received or negotiations concluded, whether or not yet effective or merely scheduled to go into effect.

§ 3.7 PERMITS, FEES AND NOTICES

§ 3.7.1 Unless otherwise provided in the Contract Documents, the Contractor shall secure and pay for the building permit and other permits and governmental fees, licenses and inspections necessary for proper execution and completion of the Work which are customarily secured after execution of the Contract and which are legally required when bids are received or negotiations concluded.

§ 3.7.2 The Contractor shall comply with and give notices required by laws, ordinances, rules, regulations and lawful orders of public authorities applicable to performance of the Work.

§ 3.7.3 It is not the Contractor's responsibility to ascertain that the Contract Documents are in accordance with applicable laws, statutes, ordinances, building codes, and rules and regulations. However, if the Contractor observes that portions of the Contract Documents are at variance therewith, the Contractor shall promptly notify the Architect and Owner in writing, and necessary changes shall be accomplished by appropriate Modification.

§ 3.7.4 If the Contractor performs Work knowing it to be contrary to laws, statutes, ordinances, building codes, and rules and regulations without such notice to the Architect and Owner, the Contractor shall assume appropriate responsibility for such Work and shall bear the costs attributable to correction.

§ 3.8 ALLOWANCES

§ 3.8.1 The Contractor shall include in the Contract Sum all allowances stated in the Contract Documents. Items covered by allowances shall be supplied for such amounts and by such persons or entities as tbe Owner may direct, but the Contractor shall not be required to employ persons or entities to whom the Contractor has reasonable objection.

§ 3.8.2 Unless otherwise provided in the Contract Documents:

- **.1** allowances shall cover the cost to the Contractor of materials and equipment delivered at the site and all required taxes, less applicable trade discounts;
- **.2** Contractor's costs for unloading and handling at the site, labor, installation costs, overhead, profit and other expenses contemplated for stated allowance amounts shall be included in the Contract Sum but not in the allowances;
- **.3** whenever costs are more than or less than allowances, the Contract Sum shall be adjusted accordingly by Change Order. The amount of the Change Order shall reflect (1) the difference between actual costs and the allowances under Section 3.8.2.1 and (2) changes in Contractor's costs under Section 3.8.2.2.

§ 3.8.3 Materials and equipment under an allowance shall be selected by the Owner in sufficient time to avoid delay in the Work.

§ 3.9 SUPERINTENDENT

§ 3.9.1 The Contractor shall employ a competent superintendent and necessary assistants who shall be in attendance at the Project site during performance of the Work. The superintendent shall represent the Contractor, and communications given to the superintendent shall be as binding as if given to the Contractor. Important communications shall be confirmed in writing. Other communications shall he similarly confirmed on written request in each case.

§ 3.10 CONTRACTOR'S CONSTRUCTION SCHEDULES

§ 3.10.1 The Contractor, promptly after being awarded the Contract, shall prepare and submit for the Owner's and Architect's information a Contractor's construction schedule for the Work. The schedule sball not exceed time limits current under the Contract Documents, shall be revised at appropriate intervals as required by the conditions of the Work and Project, shall be related to the entire Project to the extent required by the Contract Documents, and shall provide for expeditious and practicable execution of the Work.

AIA Document A201™ – 1997 Copyright © 1888, 1911, 1915, 1918, 1925, 1937, 1951, 1958, 1961, 1963, 1966, 1970, 1976, 1987 and 1997 by The American Institute of Architects. All rights reserved. WARNING: This AIA® Document is protected by U.S. Copyright Law and International Treaties. Unauthorized reproduction or distribution of this AIA® Document, or any portion of it, may result in severe civil and criminal penalties, and will be prosecuted to the maximum extent possible under the law. Purchasers are not permitted to reproduce this document. To report copyright violations of AIA Contract Documents, e-mail The American Institute of Architects' legal counsel, copyright@aia.org.

§ 3.10.2 The Contractor shall prepare and keep current, for the Architect's approval, a schedule of submittals which is coordinated with the Contractor's construction schedule and allows the Architect reasonable time to review submittals.

§ 3.10.3 The Contractor shall perform the Work in general accordance with the most recent schedules submitted to the Owner and Architect.

§ 3.11 DOCUMENTS AND SAMPLES AT THE SITE

§ 3.11.1 The Contractor shall maintain at the site for the Owner one record copy of the Drawings, Specifications, Addenda, Change Orders and other Modifications, in good order and marked currently to record field changes and selections made during construction, and one record copy of approved Shop Drawings, Product Data, Samples and similar required submittals. These shall be available to the Architect and shall be delivered to the Architect for submittal to the Owner upon completion of the Work.

§ 3.12 SHOP DRAWINGS, PRODUCT DATA AND SAMPLES

§ 3.12.1 Shop Drawings are drawings, diagrams, schedules and other data specially prepared for the Work by the Contractor or a Subcontractor, Sub-subcontractor, manufacturer, supplier or distributor to illustrate some portion of the Work.

§ 3.12.2 Product Data are illustrations, standard schedules, performance charts, instructions, brochures, diagrams and other information furnished by the Contractor to illustrate materials or equipment for some portion of the Work.

§ 3.12.3 Samples are physical examples which illustrate materials, equipment or workmanship and establish standards by which the Work will be judged.

§ 3.12.4 Shop Drawings, Product Data, Samples and similar submittals are not Contract Documents. The purpose of their submittal is to demonstrate for those portions of the Work for which submittals are required by the Contract Documents the way by which the Contractor proposes to conform to the information given and the design concept expressed in the Contract Documents. Review by the Architect is subject to the limitations of Section 4.2.7. Informational submittals upon which the Architect is not expected to take responsive action may be so identified in the Contract Documents. Submittals which are not required by the Contract Documents may be returned by the Architect without action.

§ 3.12.5 The Contractor shall review for compliance with the Contract Documents, approve and submit to the Architect Shop Drawings, Product Data, Samples and similar submittals required by the Contract Documents with reasonable promptness and in such sequence as to cause no delay in the Work or in the activities of the Owner or of separate contractors. Submittals which are not marked as reviewed for compliance with the Contract Documents and approved by the Contractor may be returned by the Architect without action.

§ 3.12.6 By approving and submitting Shop Drawings, Product Data, Samples and similar submittals, the Contractor represents that the Contractor has determined and verified materials, field measurements and field construction criteria related thereto, or will do so, and has checked and coordinated the information contained within such submittals with the requirements of the Work and of the Contract Documents.

§ 3.12.7 The Contractor shall perform no portion of the Work for which the Contract Documents require submittal and review of Shop Drawings, Product Data, Samples or similar submittals until the respective submittal has been approved by the Architect.

§ 3.12.8 The Work shall be in accordance with approved submittals except that the Contractor shall not be relieved of responsibility for deviations from requirements of the Contract Documents by the Architect's approval of Shop Drawings, Product Data, Samples or similar submittals unless the Contractor has specifically informed the Architect in writing of such deviation at the time of submittal and (1) the Architect has given written approval to the specific deviation as a minor change in the Work, or (2) a Change Order or Construction Change Directive has been issued authorizing the deviation. The Contractor shall not be relieved of responsibility for errors or omissions in Shop Drawings, Product Data, Samples or similar submittals by the Architect's approval thereof.

§ 3.12.9 The Contractor shall direct specific attention, in writing or on resubmitted Shop Drawings, Product Data, Samples or similar submittals, to revisions other than those requested by the Architect on previous submittals. In the absence of such written notice the Architect's approval of a resubmission shall not apply to such revisions.

AIA Document A201™ – 1997 Copyright © 1888, 1911, 1915, 1918, 1925, 1937, 1951, 1958, 1961, 1963, 1966, 1970, 1976, 1987 and 1997 by The American Institute of Architects. All rights reserved. WARNING: This AIA® Document is protected by U.S. Copyright Law and International Treaties. Unauthorized reproduction or distribution of this AIA® Document, or any portion of it, may result in severe civil and criminal penalties, and will be prosecuted to the maximum extent possible under the law. Purchasers are not permitted to reproduce this document. To report copyright violations of AIA Contract Documents, e-mail The American Institute of Architects' legal counsel, copyright@aia.org.

§ 3.12.10 The Contractor shall not be required to provide professional services which constitute the practice of architecture or engineering unless such services are specifically required by the Contract Documents for a portion of the Work or unless the Contractor needs to provide such services in order to carry out the Contractor's responsibilities for construction means, methods, techniques, sequences and procedures. The Contractor shall not be required to provide professional services in violation of applicable law. If professional design services or certifications by a design professional related to systems, materials or equipment are specifically required of the Contractor by the Contract Documents, the Owner and the Architect will specify all performance and design criteria that such services must satisfy. The Contractor shall cause such services or certifications to be provided by a properly licensed design professional, whose signature and seal shall appear on all drawings, calculations, specifications, certifications, Shop Drawings and other submittals prepared by such professional. Shop Drawings and other submittals related to the Work designed or certified by such professional, if prepared by others, shall bear such professional's written approval when submitted to the Architect. The Owner and the Architect shall be entitled to rely upon the adequacy, accuracy and completeness of the services, certifications or approvals performed by such design professionals, provided the Owner and Architect have specified to the Contractor all performance and design criteria that such services must satisfy. Pursuant to this Section 3.12.10, the Architect will review, approve or take other appropriate action on submittals only for the limited purpose of checking for conformance with information given and the design concept expressed in the Contract Documents. The Contractor shall not be responsible for the adequacy of the performance or design criteria required by the Contract Documents.

§ 3.13 USE OF SITE

§ 3.13.1 The Contractor shall confine operations at the site to areas permitted by law, ordinances, permits and the Contract Documents and shall not unreasonably encumber the site with materials or equipment.

§ 3.14 CUTTING AND PATCHING

§ 3.14.1 The Contractor shall be responsible for cutting, fitting or patching required to complete the Work or to make its parts fit together properly.

§ 3.14.2 The Contractor shall not damage or endanger a portion of the Work or fully or partially completed construction of the Owner or separate contractors by cutting, patching or otherwise altering such construction, or by excavation. The Contractor shall not cut or otherwise alter such construction by the Owner or a separate contractor except with written consent of the Owner and of such separate contractor; such consent shall not be unreasonably withheld. The Contractor shall not unreasonably withhold from the Owner or a separate contractor the Contractor's consent to cutting or otherwise altering the Work.

§ 3.15 CLEANING UP

§ 3.15.1 The Contractor shall keep the premises and surrounding area free from accumulation of waste materials or rubbish caused by operations under the Contract. At completion of the Work, the Contractor shall remove from and about the Project waste materials, rubbish, the Contractor's tools, construction equipment, machinery and surplus materials.

§ 3.15.2 If the Contractor fails to clean up as provided in the Contract Documents, the Owner may do so and the cost thereof shall be charged to the Contractor.

§ 3.16 ACCESS TO WORK

§ 3.16.1 The Contractor shall provide the Owner and Architect access to the Work in preparation and progress wherever located.

§ 3.17 ROYALTIES, PATENTS AND COPYRIGHTS

§ 3.17.1 The Contractor shall pay all royalties and license fees. The Contractor shall defend suits or claims for infringement of copyrights and patent rights and shall hold the Owner and Architect harmless from loss on account thereof, but shall not be responsible for such defense or loss when a particular design, process or product of a particular manufacturer or manufacturers is required by the Contract Documents or where the copyright violations are contained in Drawings, Specifications or other documents prepared by the Owner or Architect. However, if the Contractor has reason to believe that the required design, process or product is an infringement of a copyright or a patent, the Contractor shall be responsible for such loss unless such information is promptly furnished to the Architect.

AIA Document A201™ – 1997 Copyright © 1888, 1911, 1915, 1918, 1925, 1937, 1951, 1958, 1961, 1963, 1966, 1970, 1976, 1987 and 1997 by The American Institute of Architects. All rights reserved. WARNING: This AIA® Document is protected by U.S. Copyright Law and International Treaties. Unauthorized reproduction or distribution of this AIA® Document, or any portion of it, may result in severe civil and criminal penalties, and will be prosecuted to the maximum extent possible under the law. Purchasers are not permitted to reproduce this document. To report copyright violations of AIA Contract Documents, e-mail The American Institute of Architects' legal counsel, copyright@aia.org.

§ 3.18 INDEMNIFICATION

§ 3.18.1 To the fullest extent permitted by law and to the extent claims, damages, losses or expenses are not covered by Project Management Protective Liability insurance purchased by the Contractor in accordance with Section 11.3, the Contractor shall indemnify and hold harmless the Owner, Architect, Architect's consultants, and agents and employees of any of them from and against claims, damages, losses and expenses, including but not limited to attorneys' fees, arising out of or resulting from performance of the Work, provided that such claim, damage, loss or expense is attributable to bodily injury, sickness, disease or death, or to injury to or destruction of tangible property (other than the Work itself), but only to the extent caused by the negligent acts or omissions of the Contractor, a Subcontractor, anyone directly or indirectly employed by them or anyone for whose acts they may be liable, regardless of whether or not such claim, damage, loss or expense is caused in part by a party indemnified hereunder. Such obligation shall not be construed to negate, abridge, or reduce other rights or obligations of indemnity which would otherwise exist as to a party or person described in this Section 3.18.

§ 3.18.2 In claims against any person or entity indemnified under this Section 3.18 by an employee of the Contractor, a Subcontractor, anyone directly or indirectly employed by them or anyone for whose acts they may be liable, the indemnification obligation under Section 3.18.1 shall not be limited by a limitation on amount or type of damages, compensation or benefits payable by or for the Contractor or a Subcontractor under workers' compensation acts, disability benefit acts or other employee benefit acts.

ARTICLE 4 ADMINISTRATION OF THE CONTRACT

§ 4.1 ARCHITECT

§ 4.1.1 The Architect is the person lawfully licensed to practice architecture or an entity lawfully practicing architecture identified as such in the Agreement and is referred to throughout the Contract Documents as if singular in number. The term "Architect" means the Architect or the Architect's authorized representative.

§ 4.1.2 Duties, responsibilities and limitations of authority of the Architect as set forth in the Contract Documents shall not be restricted, modified or extended without written consent of the Owner, Contractor and Architect. Consent shall not be unreasonably withheld.

§ 4.1.3 If the employment of the Architect is terminated, the Owner shall employ a new Architect against whom the Contractor has no reasonable objection and whose status under the Contract Documents shall be that of the former Architect.

§ 4.2 ARCHITECT'S ADMINISTRATION OF THE CONTRACT

§ 4.2.1 The Architect will provide administration of the Contract as described in the Contract Documents, and will be an Owner's representative (1) during construction, (2) until final payment is due and (3) with the Owner's concurrence, from time to time during the one-year period for correction of Work described in Section 12.2. The Architect will have authority to act on behalf of the Owner only to the extent provided in the Contract Documents, unless otherwise modified in writing in accordance with other provisions of the Contract.

§ 4.2.2 The Architect, as a representative of the Owner, will visit the site at intervals appropriate to the stage of the Contractor's operations (1) to become generally familiar with and to keep the Owner informed about the progress and quality of the portion of the Work completed, (2) to endeavor to guard the Owner against defects and deficiencies in the Work, and (3) to determine in general if the Work is being performed in a manner indicating that the Work, when fully completed, will be in accordance with the Contract Documents. However, the Architect will not be required to make exhaustive or continuous on-site inspections to check the quality or quantity of the Work. The Architect will neither have control over or charge of, nor be responsible for, the construction means, methods, techniques, sequences or procedures, or for the safety precautions and programs in connection with the Work, since these are solely the Contractor's rights and responsibilities under the Contract Documents, except as provided in Section 3.3.1.

§ 4.2.3 The Architect will not be responsible for the Contractor's failure to perform the Work in accordance with the requirements of the Contract Documents. The Architect will not have control over or charge of and will not be responsible for acts or omissions of the Contractor, Subcontractors, or their agents or employees, or any other persons or entities performing portions of the Work.

§ 4.2.4 Communications Facilitating Contract Administration. Except as otherwise provided in the Contract Documents or when direct communications have been specially authorized, the Owner and Contractor shall endeavor to communicate with each other through the Architect about matters arising out of or relating to the

AIA Document A201™ – 1997 Copyright © 1888, 1911, 1915, 1918, 1925, 1937, 1951, 1958, 1961, 1963, 1966, 1970, 1976, 1987 and 1997 by The American Institute of Architects. All rights reserved. WARNING: This AIA® Document is protected by U.S. Copyright Law and International Treaties. Unauthorized reproduction or distribution of this AIA® Document, or any portion of it, may result in severe civil and criminal penalties, and will be prosecuted to the maximum extent possible under the law. Purchasers are not permitted to reproduce this document. To report copyright violations of AIA Contract Documents, e-mail The American Institute of Architects' legal counsel, copyright@aia.org.

Contract. Communications by and with the Architect's consultants shall be through the Architect. Communications by and with Subcontractors and material suppliers shall be through the Contractor. Communications by and with separate contractors shall be through the Owner.

§ 4.2.5 Based on the Architect's evaluations of the Contractor's Applications for Payment, the Architect will review and certify the amounts due the Contractor and will issue Certificates for Payment in such amounts.

§ 4.2.6 The Architect will have authority to reject Work that does not conform to the Contract Documents. Whenever the Architect considers it necessary or advisable, the Architect will have authority to require inspection or testing of the Work in accordance with Sections 13.5.2 and 13.5.3, whether or not such Work is fabricated, installed or completed. However, neither this authority of the Architect nor a decision made in good faith either to exercise or not to exercise such authority shall give rise to a duty or responsibility of the Architect to the Contractor, Subcontractors, material and equipment suppliers, their agents or employees, or other persons or entities performing portions of the Work.

§ 4.2.7 The Architect will review and approve or take other appropriate action upon the Contractor's submittals such as Shop Drawings, Product Data and Samples, but only for the limited purpose of checking for conformance with information given and the design concept expressed in the Contract Documents. The Architect's action will be taken with such reasonable promptness as to cause no delay in the Work or in the activities of the Owner, Contractor or separate contractors, while allowing sufficient time in the Architect's professional judgment to permit adequate review. Review of such submittals is not conducted for the purpose of determining the accuracy and completeness of other details such as dimensions and quantities, or for substantiating instructions for installation or performance of equipment or systems, all of which remain the responsibility of the Contractor as required by the Contract Documents. The Architect's review of the Contractor's submittals shall not relieve the Contractor of the obligations under Sections 3.3, 3.5 and 3.12. The Architect's review shall not constitute approval of safety precautions or, unless otherwise specifically stated by the Architect, of any construction means, methods, techniques, sequences or procedures. The Architect's approval of a specific item shall not indicate approval of an assembly of which the item is a component.

§ 4.2.8 The Architect will prepare Change Orders and Construction Change Directives, and may authorize minor changes in the Work as provided in Section 7.4.

§ 4.2.9 The Architect will conduct inspections to determine the date or dates of Substantial Completion and the date of final completion, will receive and forward to the Owner, for the Owner's review and records, written warranties and related documents required by the Contract and assembled by the Contractor, and will issue a final Certificate for Payment upon compliance with the requirements of the Contract Documents.

§ 4.2.10 If the Owner and Architect agree, the Architect will provide one or more project representatives to assist in carrying out the Architect's responsibilities at the site. The duties, responsibilities and limitations of authority of such project representatives shall be as set forth in an exhibit to be incorporated in the Contract Documents.

§ 4.2.11 The Architect will interpret and decide matters concerning performance under and requirements of, the Contract Documents on written request of either the Owner or Contractor. The Architect's response to such requests will be made in writing within any time limits agreed upon or otherwise with reasonable promptness. If no agreement is made concerning the time within which interpretations required of the Architect shall be furnished in compliance with this Section 4.2, then delay shall not be recognized on account of failure by the Arcbitect to furnish such interpretations until 15 days after written request is made for them.

§ 4.2.12 Interpretations and decisions of the Architect will be consistent with the intent of and reasonably inferable from the Contract Documents and will be in writing or in the form of drawings. When making such interpretations and initial decisions, the Architect will endeavor to secure faithful performance by both Owner and Contractor, will not show partiality to either and will not be liable for results of interpretations or decisions so rendered in good faith.

§ 4.2.13 The Architect's decisions on matters relating to aesthetic effect will be final if consistent with the intent expressed in the Contract Documents.

§ 4.3 CLAIMS AND DISPUTES

§ 4.3.1 Definition. A Claim is a demand or assertion by one of the parties seeking, as a matter of right, adjustment or interpretation of Contract terms, payment of money, extension of time or other relief with respect to the terms of

AIA Document A201™ – 1997 Copyright © 1888, 1911, 1915, 1918, 1925, 1937, 1951, 1958, 1961, 1963, 1966, 1970, 1976, 1987 and 1997 by The American Institute of Architects. All rights reserved. WARNING: This AIA® Document is protected by U.S. Copyright Law and International Treaties. Unauthorized reproduction or distribution of this AIA® Document, or any portion of it, may result in severe civil and criminal penalties, and will be prosecuted to the maximum extent possible under the law. Purchasers are not permitted to reproduce this document. To report copyright violations of AIA Contract Documents, e-mail The American Institute of Architects' legal counsel, copyright@aia.org.

the Contract. The term "Claim" also includes other disputes and matters in question between the Owner and Contractor arising out of or relating to the Contract. Claims must be initiated by written notice. The responsibility to substantiate Claims shall rest with the party making the Claim.

§ 4.3.2 Time Limits on Claims. Claims by either party must be initiated within 21 days after occurrence of the event giving rise to such Claim or within 21 days after the claimant first recognizes the condition giving rise to the Claim, whichever is later. Claims must be initiated by written notice to the Architect and the other party.

§ 4.3.3 Continuing Contract Performance. Pending final resolution of a Claim except as otherwise agreed in writing or as provided in Section 9.7.1 and Article 14, the Contractor shall proceed diligently with performance of the Contract and the Owner shall continue to make payments in accordance with the Contract Documents.

§ 4.3.4 Claims for Concealed or Unknown Conditions. If conditions are encountered at the site which are (1) subsurface or otherwise concealed physical conditions which differ materially from those indicated in the Contract Documents or (2) unknown physical conditions of an unusual nature, which differ materially from those ordinarily found to exist and generally recognized as inherent in construction activities of the character provided for in the Contract Documents, then notice by the observing party shall be given to the other party promptly before conditions are disturbed and in no event later than 21 days after first observance of the conditions. The Architect will promptly investigate such conditions and, if they differ materially and cause an increase or decrease in the Contractor's cost of, or time required for, performance of any part of the Work, will recommend an equitable adjustment in the Contract Sum or Contract Time, or both. If the Architect determines that the conditions at the site are not materially different from those indicated in the Contract Documents and that no change in the terms of the Contract is justified, the Architect shall so notify the Owner and Contractor in writing, stating the reasons. Claims by either party in opposition to such determination must be made within 21 days after the Architect has given notice of the decision. If the conditions encountered are materially different, the Contract Sum and Contract Time shall be equitably adjusted, but if the Owner and Contractor cannot agree on an adjustment in the Contract Sum or Contract Time, the adjustment shall be referred to the Architect for initial determination, subject to further proceedings pursuant to Section 4.4.

§ 4.3.5 Claims for Additional Cost. If the Contractor wishes to make Claim for an increase in the Contract Sum, written notice as provided herein shall be given before proceeding to execute the Work. Prior notice is not required for Claims relating to an emergency endangering life or property arising under Section 10.6.

§ 4.3.6 If the Contractor believes additional cost is involved for reasons including but not limited to (1) a written interpretation from the Architect, (2) an order by the Owner to stop the Work where the Contractor was not at fault, (3) a written order for a minor change in the Work issued by the Architect, (4) failure of payment by the Owner, (5) termination of the Contract by the Owner, (6) Owner's suspension or (7) other reasonable grounds, Claim shall be filed in accordance with this Section 4.3.

§ 4.3.7 Claims for Additional Time

§ 4.3.7.1 If the Contractor wishes to make Claim for an increase in the Contract Time, written notice as provided herein shall be given. The Contractor's Claim shall include an estimate of cost and of probable effect of delay on progress of the Work. In the case of a continuing delay only one Claim is necessary.

§ 4.3.7.2 If adverse weather conditions are the basis for a Claim for additional time, such Claim shall be documented by data substantiating that weather conditions were abnormal for the period of time, could not have been reasonably anticipated and had an adverse effect on the scheduled construction.

§ 4.3.8 Injury or Damage to Person or Property. If either party to the Contract suffers injury or damage to person or property because of an act or omission of the other party, or of others for whose acts such party is legally responsible, written notice of such injury or damage, whether or not insured, shall be given to the other party within a reasonable time not exceeding 21 days after discovery. The notice shall provide sufficient detail to enable the other party to investigate the matter.

§ 4.3.9 If unit prices are stated in the Contract Documents or subsequently agreed upon, and if quantities originally contemplated are materially changed in a proposed Change Order or Construction Change Directive so that application of such unit prices to quantities of Work proposed will cause substantial inequity to the Owner or Contractor, the applicable unit prices shall be equitably adjusted.

AIA Document A201™ – 1997 Copyright © 1888, 1911, 1915, 1918, 1925, 1937, 1951, 1958, 1961, 1963, 1966, 1970, 1976, 1987 and 1997 by The American Institute of Architects. All rights reserved. WARNING: This AIA® Document is protected by U.S. Copyright Law and International Treaties. Unauthorized reproduction or distribution of this AIA® Document, or any portion of it, may result in severe civil and criminal penalties, and will be prosecuted to the maximum extent possible under the law. Purchasers are not permitted to reproduce this document. To report copyright violations of AIA Contract Documents, e-mail The American Institute of Architects' legal counsel, copyright@aia.org.

§ 4.3.10 Claims for Consequential Damages. The Contractor and Owner waive Claims against each other for consequential damages arising out of or relating to this Contract. This mutual waiver includes:

.1 damages incurred by the Owner for rental expenses, for losses of use, income, profit, financing, business and reputation, and for loss of management or employee productivity or of the services of such persons; and

.2 damages incurred by the Contractor for principal office expenses including the compensation of personnel stationed there, for losses of financing, business and reputation, and for loss of profit except anticipated profit arising directly from the Work.

This mutual waiver is applicable, without limitation, to all consequential damages due to either party's termination in accordance with Article 14. Nothing contained in this Section 4.3.10 shall be deemed to preclude an award of liquidated direct damages, when applicable, in accordance with the requirements of the Contract Documents.

§ 4.4 RESOLUTION OF CLAIMS AND DISPUTES

§ 4.4.1 Decision of Architect. Claims, including those alleging an error or omission by the Architect but excluding those arising under Sections 10.3 through 10.5, shall be referred initially to the Architect for decision. An initial decision by the Architect shall be required as a condition precedent to mediation, arbitration or litigation of all Claims between the Contractor and Owner arising prior to the date final payment is due, unless 30 days have passed after the Claim has been referred to the Architect with no decision having been rendered by the Architect. The Architect will not decide disputes between the Contractor and persons or entities other than the Owner.

§ 4.4.2 The Architect will review Claims and within ten days of the receipt of the Claim take one or more of the following actions: (1) request additional supporting data from the claimant or a response with supporting data from the other party, (2) reject the Claim in whole or in part, (3) approve the Claim, (4) suggest a compromise, or (5) advise the parties that the Architect is unable to resolve the Claim if the Architect lacks sufficient information to evaluate the merits of the Claim or if the Architect concludes that, in the Architect's sole discretion, it would be inappropriate for the Architect to resolve the Claim.

§ 4.4.3 In evaluating Claims, the Architect may, but shall not be obligated to, consult with or seek information from either party or from persons with special knowledge or expertise who may assist the Architect in rendering a decision. The Architect may request the Owner to authorize retention of such persons at the Owner's expense.

§ 4.4.4 If the Architect requests a party to provide a response to a Claim or to furnish additional supporting data, such party shall respond, within ten days after receipt of such request, and shall either provide a response on the requested supporting data, advise the Architect when the response or supporting data will be furnished or advise the Architect that no supporting data will be furnished. Upon receipt of the response or supporting data, if any, the Architect will either reject or approve the Claim in whole or in part.

§ 4.4.5 The Architect will approve or reject Claims by written decision, which shall state the reasons therefor and which shall notify the parties of any change in the Contract Sum or Contract Time or both. The approval or rejection of a Claim by the Architect shall be final and binding on the parties but subject to mediation and arbitration.

§ 4.4.6 When a written decision of the Architect states that (1) the decision is final but subject to mediation and arbitration and (2) a demand for arbitration of a Claim covered by such decision must be made within 30 days after the date on which the party making the demand receives the final written decision, then failure to demand arbitration within said 30 days' period shall result in the Architect's decision becoming final and binding upon the Owner and Contractor. If the Architect renders a decision after arbitration proceedings have been initiated, such decision may be entered as evidence, but shall not supersede arbitration proceedings unless the decision is acceptable to all parties concerned.

§ 4.4.7 Upon receipt of a Claim against the Contractor or at any time thereafter, the Architect or the Owner may, but is not obligated to, notify the surety, if any, of the nature and amount of the Claim. If the Claim relates to a possibility of a Contractor's default, the Architect or the Owner may, but is not obligated to, notify the surety and request the surety's assistance in resolving the controversy.

§ 4.4.8 If a Claim relates to or is the subject of a mechanic's lien, the party asserting such Claim may proceed in accordance with applicable law to comply with the lien notice or filing deadlines prior to resolution of the Claim by the Architect, by mediation or by arbitration.

AIA Document A201™ – 1997 Copyright © 1888, 1911, 1915, 1918, 1925, 1937, 1951, 1958, 1961, 1963, 1966, 1970, 1976, 1987 and 1997 by The American Institute of Architects. All rights reserved. WARNING: This AIA® Document is protected by U.S. Copyright Law and International Treaties. Unauthorized reproduction or distribution of this AIA® Document, or any portion of it, may result in severe civil and criminal penalties, and will be prosecuted to the maximum extent possible under the law. Purchasers are not permitted to reproduce this document. To report copyright violations of AIA Contract Documents, e-mail The American Institute of Architects' legal counsel, copyright@aia.org.

§ 4.5 MEDIATION

§ 4.5.1 Any Claim arising out of or related to the Contract, except Claims relating to aesthetic effect and except those waived as provided for in Sections 4.3.10, 9.10.4 and 9.10.5 shall, after initial decision by the Architect or 30 days after submission of the Claim to the Architect, be subject to mediation as a condition precedent to arbitration or the institution of legal or equitable proceedings by either party.

§ 4.5.2 The parties shall endeavor to resolve their Claims by mediation which, unless the parties mutually agree otherwise, shall be in accordance with the Construction Industry Mediation Rules of the American Arbitration Association currently in effect. Request for mediation shall be filed in writing with the other party to the Contract and with the American Arbitration Association. The request may be made concurrently with the filing of a demand for arbitration but, in such event, mediation shall proceed in advance of arbitration or legal or equitable proceedings, which shall be stayed pending mediation for a period of 60 days from the date of filing, unless stayed for a longer period by agreement of the parties or court order.

§ 4.5.3 The parties shall share the mediator's fee and any filing fees equally. The mediation shall be held in the place where the Project is located, unless another location is mutually agreed upon. Agreements reached in mediation shall be enforceable as settlement agreements in any court having jurisdiction thereof.

§ 4.6 ARBITRATION

§ 4.6.1 Any Claim arising out of or related to the Contract, except Claims relating to aesthetic effect and except those waived as provided for in Sections 4.3.10, 9.10.4 and 9.10.5, shall, after decision by the Architect or 30 days after submission of the Claim to the Architect, be subject to arbitration. Prior to arbitration, the parties shall endeavor to resolve disputes by mediation in accordance with the provisions of Section 4.5.

§ 4.6.2 Claims not resolved by mediation shall be decided by arbitration which, unless the parties mutually agree otherwise, shall be in accordance with the Construction Industry Arbitration Rules of the American Arbitration Association currently in effect. The demand for arbitration shall be filed in writing with the other party to the Contract and with the American Arbitration Association, and a copy shall be filed with the Architect.

§ 4.6.3 A demand for arbitration shall be made within the time limits specified in Sections 4.4.6 and 4.6.1 as applicable, and in other cases within a reasonable time after the Claim has arisen, and in no event shall it be made after the date when institution of legal or equitable proceedings based on such Claim would be barred by the applicable statute of limitations as determined pursuant to Section 13.7.

§ 4.6.4 Limitation on Consolidation or Joinder. No arbitration arising out of or relating to the Contract shall include, by consolidation or joinder or in any other manner, the Architect, the Architect's employees or consultants, except by written consent containing specific reference to the Agreement and signed by the Architect, Owner, Contractor and any other person or entity sought to be joined. No arbitration shall include, by consolidation or joinder or in any other manner, parties other than the Owner, Contractor, a separate contractor as described in Article 6 and other persons substantially involved in a common question of fact or law whose presence is required if complete relief is to be accorded in arbitration. No person or entity other than the Owner, Contractor or a separate contractor as described in Article 6 shall be included as an original third party or additional third party to an arbitration whose interest or responsibility is insubstantial. Consent to arbitration involving an additional person or entity shall not constitute consent to arbitration of a Claim not described therein or with a person or entity not named or described therein. The foregoing agreement to arbitrate and other agreements to arbitrate with an additional person or entity duly consented to by parties to the Agreement shall be specifically enforceable under applicable law in any court having jurisdiction thereof.

§ 4.6.5 Claims and Timely Assertion of Claims. The party filing a notice of demand for arbitration must assert in the demand all Claims then known to that party on which arbitration is permitted to be demanded.

§ 4.6.6 Judgment on Final Award. The award rendered by the arbitrator or arbitrators shall be final, and judgment may be entered upon it in accordance with applicable law in any court having jurisdiction thereof.

ARTICLE 5 SUBCONTRACTORS

§ 5.1 DEFINITIONS

§ 5.1.1 A Subcontractor is a person or entity who has a direct contract with the Contractor to perform a portion of the Work at the site. The term "Subcontractor" is referred to throughout the Contract Documents as if singular in

AIA Document A201™ – 1997 Copyright © 1888, 1911, 1915, 1918, 1925, 1937, 1951, 1958, 1961, 1963, 1966, 1970, 1976, 1987 and 1997 by The American Institute of Architects. All rights reserved. WARNING: This AIA® Document is protected by U.S. Copyright Law and International Treaties. Unauthorized reproduction or distribution of this AIA® Document, or any portion of it, may result in severe civil and criminal penalties, and will be prosecuted to the maximum extent possible under the law. Purchasers are not permitted to reproduce this document. To report copyright violations of AIA Contract Documents, e-mail The American Institute of Architects' legal counsel, copyright@aia.org.

number and means a Subcontractor or an authorized representative of the Subcontractor. The term "Subcontractor" does not include a separate contractor or subcontractors of a separate contractor.

§ 5.1.2 A Sub-subcontractor is a person or entity who has a direct or indirect contract with a Subcontractor to perform a portion of the Work at the site. The term "Sub-subcontractor" is referred to throughout the Contract Documents as if singular in number and means a Sub-subcontractor or an authorized representative of the Sub-subcontractor.

§ 5.2 AWARD OF SUBCONTRACTS AND OTHER CONTRACTS FOR PORTIONS OF THE WORK

§ 5.2.1 Unless otherwise stated in the Contract Documents or the bidding requirements, the Contractor, as soon as practicable after award of the Contract, shall furnish in writing to the Owner through the Architect the names of persons or entities (including those who are to furnish materials or equipment fabricated to a special design) proposed for each principal portion of the Work. The Architect will promptly reply to the Contractor in writing stating whether or not the Owner or the Architect, after due investigation, has reasonable objection to any such proposed person or entity. Failure of the Owner or Architect to reply promptly shall constitute notice of no reasonable objection.

§ 5.2.2 The Contractor shall not contract with a proposed person or entity to whom the Owner or Architect has made reasonable and timely objection. The Contractor shall not be required to contract with anyone to whom the Contractor has made reasonable objection.

§ 5.2.3 If the Owner or Architect has reasonable objection to a person or entity proposed by the Contractor, the Contractor shall propose another to whom the Owner or Architect has no reasonable objection. If the proposed but rejected Subcontractor was reasonably capable of performing the Work, the Contract Sum and Contract Time shall be increased or decreased by the difference, if any, occasioned by such change, and an appropriate Change Order shall be issued before commencement of the substitute Subcontractor's Work. However, no increase in the Contract Sum or Contract Time shall be allowed for such change unless the Contractor has acted promptly and responsively in submitting names as required.

§ 5.2.4 The Contractor shall not change a Subcontractor, person or entity previously selected if the Owner or Architect makes reasonable objection to such substitute.

§ 5.3 SUBCONTRACTUAL RELATIONS

§ 5.3.1 By appropriate agreement, written where legally required for validity, the Contractor shall require each Subcontractor, to the extent of the Work to be performed by the Subcontractor, to be bound to the Contractor by terms of the Contract Documents, and to assume toward the Contractor all the obligations and responsibilities, including the responsibility for safety of the Subcontractor's Work, which the Contractor, by these Documents, assumes toward the Owner and Architect. Each subcontract agreement shall preserve and protect the rights of the Owner and Architect under the Contract Documents with respect to the Work to be performed by the Subcontractor so that subcontracting thereof will not prejudice such rights, and shall allow to the Subcontractor, unless specifically provided otherwise in the subcontract agreement, the benefit of all rights, remedies and redress against the Contractor that the Contractor, by the Contract Documents, has against the Owner. Where appropriate, the Contractor shall require each Subcontractor to enter into similar agreements with Sub-subcontractors. The Contractor shall make available to each proposed Subcontractor, prior to the execution of the subcontract agreement, copies of the Contract Documents to which the Subcontractor will be bound, and, upon written request of the Subcontractor, identify to the Subcontractor terms and conditions of the proposed subcontract agreement which may be at variance with the Contract Documents. Subcontractors will similarly make copies of applicable portions of such documents available to their respective proposed Sub-subcontractors.

§ 5.4 CONTINGENT ASSIGNMENT OF SUBCONTRACTS

§ 5.4.1 Each subcontract agreement for a portion of the Work is assigned by the Contractor to the Owner provided that:

.1 assignment is effective only after termination of the Contract by the Owner for cause pursuant to Section 14.2 and only for those subcontract agreements which the Owner accepts by notifying the Subcontractor and Contractor in writing; and

.2 assignment is subject to the prior rights of the surety, if any, obligated under bond relating to the Contract.

AIA Document A201™ – 1997 Copyright © 1888, 1911, 1915, 1918, 1925, 1937, 1951, 1958, 1961, 1963, 1966, 1970, 1976, 1987 and 1997 by The American Institute of Architects. All rights reserved. WARNING: This AIA® Document is protected by U.S. Copyright Law and International Treaties. Unauthorized reproduction or distribution of this AIA® Document, or any portion of it, may result in severe civil and criminal penalties, and will be prosecuted to the maximum extent possible under the law. Purchasers are not permitted to reproduce this document. To report copyright violations of AIA Contract Documents, e-mail The American Institute of Architects' legal counsel, copyright@aia.org.

§ 5.4.2 Upon such assignment, if the Work has been suspended for more than 30 days, the Subcontractor's compensation shall be equitably adjusted for increases in cost resulting from the suspension.

ARTICLE 6 CONSTRUCTION BY OWNER OR BY SEPARATE CONTRACTORS

§ 6.1 OWNER'S RIGHT TO PERFORM CONSTRUCTION AND TO AWARD SEPARATE CONTRACTS

§ 6.1.1 The Owner reserves the right to perform construction or operations related to the Project with the Owner's own forces, and to award separate contracts in connection with other portions of the Project or other construction or operations on the site under Conditions of the Contract identical or substantially similar to these including those portions related to insurance and waiver of subrogation. If the Contractor claims that delay or additional cost is involved because of such action by the Owner, the Contractor shall make such Claim as provided in Section 4.3.

§ 6.1.2 When separate contracts are awarded for different portions of the Project or other construction or operations on the site, the term "Contractor" in the Contract Documents in each case shall mean the Contractor who executes each separate Owner-Contractor Agreement.

§ 6.1.3 The Owner shall provide for coordination of the activities of the Owner's own forces and of each separate contractor with the Work of the Contractor, who shall cooperate with them. The Contractor shall participate with other separate contractors and the Owner in reviewing their construction schedules when directed to do so. The Contractor shall make any revisions to the construction schedule deemed necessary after a joint review and mutual agreement. The construction schedules shall then constitute the schedules to be used by the Contractor, separate contractors and the Owner until subsequently revised.

§ 6.1.4 Unless otherwise provided in the Contract Documents, when the Owner performs construction or operations related to the Project with the Owner's own forces, the Owner shall be deemed to be subject to the same obligations and to have the same rights which apply to the Contractor under the Conditions of the Contract, including, without excluding others, those stated in Article 3, this Article 6 and Articles 10, 11 and 12.

§ 6.2 MUTUAL RESPONSIBILITY

§ 6.2.1 The Contractor shall afford the Owner and separate contractors reasonable opportunity for introduction and storage of their materials and equipment and performance of their activities, and shall connect and coordinate the Contractor's construction and operations with theirs as required hy the Contract Documents.

§ 6.2.2 If part of the Contractor's Work depends for proper execution or results upon construction or operations by the Owner or a separate contractor, the Contractor shall, prior to proceeding with that portion of the Work, promptly report to the Architect apparent discrepancies or defects in such other construction that would render it unsuitable for such proper execution and results. Failure of the Contractor so to report shall constitute an acknowledgment that the Owner's or separate contractor's completed or partially completed construction is fit and proper to receive the Contractor's Work, except as to defects not then reasonably discoverable.

§ 6.2.3 The Owner shall be reimbursed by the Contractor for costs incurred by the Owner which are payable to a separate contractor because of delays, improperly timed activities or defective construction of the Contractor. The Owner shall be responsible to the Contractor for costs incurred by the Contractor because of delays, improperly timed activities, damage to the Work or defective construction of a separate contractor.

§ 6.2.4 The Contractor shall promptly remedy damage wrongfully caused by the Contractor to completed or partially completed construction or to property of the Owner or separate contractors as provided in Section 10.2.5.

§ 6.2.5 The Owner and each separate contractor shall have the same responsibilities for cutting and patching as are described for the Contractor in Section 3.14.

§ 6.3 OWNER'S RIGHT TO CLEAN UP

§ 6.3.1 If a dispute arises among the Contractor, separate contractors and the Owner as to the responsibility under their respective contracts for maintaining the premises and surrounding area free from waste materials and rubbish, the Owner may clean up and the Architect will allocate the cost among those responsible.

AIA Document A201™ – 1997 Copyright © 1888, 1911, 1915, 1918, 1925, 1937, 1951, 1958, 1961, 1963, 1966, 1970, 1976, 1987 and 1997 by The American Institute of Architects. All rights reserved. WARNING: This AIA® Document is protected by U.S. Copyright Law and International Treaties. Unauthorized reproduction or distribution of this AIA® Document, or any portion of it, may result in severe civil and criminal penalties, and will be prosecuted to the maximum extent possible under the law. Purchasers are not permitted to reproduce this document. To report copyright violations of AIA Contract Documents, e-mail The American Institute of Architects' legal counsel, copyright@aia.org.

ARTICLE 7 CHANGES IN THE WORK

§ 7.1 GENERAL

§ 7.1.1 Changes in the Work may be accomplished after execution of the Contract, and without invalidating the Contract, by Change Order, Construction Change Directive or order for a minor change in the Work, subject to the limitations stated in this Article 7 and elsewhere in the Contract Documents.

§ 7.1.2 A Change Order shall be based upon agreement among the Owner, Contractor and Architect; a Construction Change Directive requires agreement by the Owner and Architect and may or may not be agreed to by the Contractor; an order for a minor change in the Work may be issued by the Architect alone.

§ 7.1.3 Changes in the Work shall be performed under applicable provisions of the Contract Documents, and the Contractor shall proceed promptly, unless otherwise provided in the Change Order, Construction Change Directive or order for a minor change in the Work.

§ 7.2 CHANGE ORDERS

§ 7.2.1 A Change Order is a written instrument prepared by the Architect and signed by the Owner, Contractor and Architect, stating their agreement upon all of the following:

.1 change in the Work;
.2 the amount of the adjustment, if any, in the Contract Sum; and
.3 the extent of the adjustment, if any, in the Contract Time.

§ 7.2.2 Methods used in determining adjustments to the Contract Sum may include those listed in Section 7.3.3.

§ 7.3 CONSTRUCTION CHANGE DIRECTIVES

§ 7.3.1 A Construction Change Directive is a written order prepared by the Architect and signed by the Owner and Architect, directing a change in the Work prior to agreement on adjustment, if any, in the Contract Sum or Contract Time, or both. The Owner may by Construction Change Directive, without invalidating the Contract, order changes in the Work within the general scope of the Contract consisting of additions, deletions or other revisions, the Contract Sum and Contract Time being adjusted accordingly.

§ 7.3.2 A Construction Change Directive shall be used in the absence of total agreement on the terms of a Change Order.

§ 7.3.3 If the Construction Change Directive provides for an adjustment to the Contract Sum, the adjustment shall be based on one of the following methods:

.1 mutual acceptance of a lump sum properly itemized and supported by sufficient substantiating data to permit evaluation;
.2 unit prices stated in the Contract Documents or subsequently agreed upon;
.3 cost to be determined in a manner agreed upon by the parties and a mutually acceptable fixed or percentage fee; or
.4 as provided in Section 7.3.6.

§ 7.3.4 Upon receipt of a Construction Change Directive, the Contractor shall promptly proceed with the change in the Work involved and advise the Architect of the Contractor's agreement or disagreement with the method, if any, provided in the Construction Change Directive for determining the proposed adjustment in the Contract Sum or Contract Time.

§ 7.3.5 A Construction Change Directive signed by the Contractor indicates the agreement of the Contractor therewith, including adjustment in Contract Sum and Contract Time or the method for determining them. Such agreement shall be effective immediately and shall be recorded as a Change Order.

§ 7.3.6 If the Contractor does not respond promptly or disagrees with the method for adjustment in the Contract Sum, the method and the adjustment shall be determined by the Architect on the basis of reasonable expenditures and savings of those performing the Work attributable to the change, including, in case of an increase in the Contract Sum, a reasonable allowance for overhead and profit. In such case, and also under Section 7.3.3.3, the Contractor

AIA Document A201™ – 1997 Copyright © 1888, 1911, 1915, 1918, 1925, 1937, 1951, 1958, 1961, 1963, 1966, 1970, 1976, 1987 and 1997 by The American Institute of Architects. All rights reserved. WARNING: This AIA® Document is protected by U.S. Copyright Law and International Treaties. Unauthorized reproduction or distribution of this AIA® Document, or any portion of it, may result in severe civil and criminal penalties, and will be prosecuted to the maximum extent possible under the law. Purchasers are not permitted to reproduce this document. To report copyright violations of AIA Contract Documents, e-mail The American Institute of Architects' legal counsel, copyright@aia.org.

shall keep and present, in such form as the Architect may prescribe, an itemized accounting together with appropriate supporting data. Unless otherwise provided in the Contract Documents, costs for the purposes of this Section 7.3.6 shall be limited to the following:

.1 costs of labor, including social security, old age and unemployment insurance, fringe benefits required by agreement or custom, and workers' compensation insurance;

.2 costs of materials, supplies and equipment, including cost of transportation, whether incorporated or consumed;

.3 rental costs of machinery and equipment, exclusive of hand tools, whether rented from the Contractor or others;

.4 costs of premiums for all bonds and insurance, permit fees, and sales, use or similar taxes related to the Work; and

.5 additional costs of supervision and field office personnel directly attributable to the change.

§ 7.3.7 The amount of credit to be allowed by the Contractor to the Owner for a deletion or change which results in a net decrease in the Contract Sum shall be actual net cost as confirmed by the Architect. When both additions and credits covering related Work or substitutions are involved in a change, the allowance for overhead and profit shall be figured on the basis of net increase, if any, with respect to that change.

§ 7.3.8 Pending final determination of the total cost of a Construction Change Directive to the Owner, amounts not in dispute for such changes in the Work shall be included in Applications for Payment accompanied by a Change Order indicating the parties' agreement with part or all of such costs. For any portion of such cost that remains in dispute, the Architect will make an interim determination for purposes of monthly certification for payment for those costs. That determination of cost shall adjust the Contract Sum on the same basis as a Change Order, subject to the right of either party to disagree and assert a claim in accordance with Article 4.

§ 7.3.9 When the Owner and Contractor agree with the determination made by the Architect concerning the adjustments in the Contract Sum and Contract Time, or otherwise reach agreement upon the adjustments, such agreement shall be effective immediately and shall be recorded by preparation and execution of an appropriate Change Order.

§ 7.4 MINOR CHANGES IN THE WORK

§ 7.4.1 The Architect will have authority to order minor changes in the Work not involving adjustment in the Contract Sum or extension of the Contract Time and not inconsistent with the intent of the Contract Documents. Such changes shall be effected by written order and shall be binding on the Owner and Contractor. The Contractor shall carry out such written orders promptly.

ARTICLE 8 TIME

§ 8.1 DEFINITIONS

§ 8.1.1 Unless otherwise provided, Contract Time is the period of time, including authorized adjustments, allotted in the Contract Documents for Substantial Completion of the Work.

§ 8.1.2 The date of commencement of the Work is the date established in the Agreement.

§ 8.1.3 The date of Substantial Completion is the date certified by the Architect in accordance with Section 9.8.

§ 8.1.4 The term "day" as used in the Contract Documents shall mean calendar day unless otherwise specifically defined.

§ 8.2 PROGRESS AND COMPLETION

§ 8.2.1 Time limits stated in the Contract Documents are of the essence of the Contract. By executing the Agreement the Contractor confirms that the Contract Time is a reasonable period for performing the Work.

§ 8.2.2 The Contractor shall not knowingly, except by agreement or instruction of the Owner in writing, prematurely commence operations on the site or elsewhere prior to the effective date of insurance required by Article 11 to be furnished by the Contractor and Owner. The date of commencement of the Work shall not be changed by the effective date of such insurance. Unless the date of commencement is established by the Contract Documents or a notice to proceed given by the Owner, the Contractor shall notify the Owner in writing not less than five days or other agreed period before commencing the Work to permit the timely filing of mortgages, mechanic's liens and other security interests.

AIA Document A201™ – 1997 Copyright © 1888, 1911, 1915, 1918, 1925, 1937, 1951, 1958, 1961, 1963, 1966, 1970, 1976, 1987 and 1997 by The American Institute of Architects. All rights reserved. WARNING: This AIA® Document is protected by U.S. Copyright Law and International Treaties. Unauthorized reproduction or distribution of this AIA® Document, or any portion of it, may result in severe civil and criminal penalties, and will be prosecuted to the maximum extent possible under the law. Purchasers are not permitted to reproduce this document. To report copyright violations of AIA Contract Documents, e-mail The American Institute of Architects' legal counsel, copyright@aia.org.

§ 8.2.3 The Contractor shall proceed expeditiously with adequate forces and shall achieve Substantial Completion within the Contract Time.

§ 8.3 DELAYS AND EXTENSIONS OF TIME

§ 8.3.1 If the Contractor is delayed at any time in the commencement or progress of the Work by an act or neglect of the Owner or Architect, or of an employee of either, or of a separate contractor employed by the Owner, or by changes ordered in the Work, or by labor disputes, fire, unusual delay in deliveries, unavoidable casualties or other causes beyond the Contractor's control, or by delay authorized by the Owner pending mediation and arbitration, or by other causes which the Architect determines may justify delay, then the Contract Time shall be extended by Change Order for such reasonable time as the Architect may determine.

§ 8.3.2 Claims relating to time shall be made in accordance with applicable provisions of Section 4.3.

§ 8.3.3 This Section 8.3 does not preclude recovery of damages for delay by either party under other provisions of the Contract Documents.

ARTICLE 9 PAYMENTS AND COMPLETION

§ 9.1 CONTRACT SUM

§ 9.1.1 The Contract Sum is stated in the Agreement and, including authorized adjustments, is the total amount payable by the Owner to the Contractor for performance of the Work under the Contract Documents.

§ 9.2 SCHEDULE OF VALUES

§ 9.2.1 Before the first Application for Payment, the Contractor shall submit to the Architect a schedule of values allocated to various portions of the Work, prepared in such form and supported by such data to substantiate its accuracy as the Architect may require. This schedule, unless objected to by the Architect, shall be used as a basis for reviewing the Contractor's Applications for Payment.

§ 9.3 APPLICATIONS FOR PAYMENT

§ 9.3.1 At least ten days before the date established for each progress payment, the Contractor shall submit to the Architect an itemized Application for Payment for operations completed in accordance with the schedule of values. Such application shall be notarized, if required, and supported by such data substantiating the Contractor's right to payment as the Owner or Architect may require, such as copies of requisitions from Subcontractors and material suppliers, and reflecting retainage if provided for in the Contract Documents.

§ 9.3.1.1 As provided in Section 7.3.8, such applications may include requests for payment on account of changes in the Work which have been properly authorized by Construction Change Directives, or by interim determinations of the Architect, but not yet included in Change Orders.

§ 9.3.1.2 Such applications may not include requests for payment for portions of the Work for which the Contractor does not intend to pay to a Subcontractor or material supplier, unless such Work has been performed by others whom the Contractor intends to pay.

§ 9.3.2 Unless otherwise provided in the Contract Documents, payments shall be made on account of materials and equipment delivered and suitably stored at the site for subsequent incorporation in the Work. If approved in advance by the Owner, payment may similarly be made for materials and equipment suitably stored off the site at a location agreed upon in writing. Payment for materials and equipment stored on or off the site shall be conditioned upon compliance by the Contractor with procedures satisfactory to the Owner to establish the Owner's title to such materials and equipment or otherwise protect the Owner's interest, and shall include the costs of applicable insurance, storage and transportation to the site for such materials and equipment stored off the site.

§ 9.3.3 The Contractor warrants that title to all Work covered by an Application for Payment will pass to the Owner no later than the time of payment. The Contractor further warrants that upon submittal of an Application for Payment all Work for which Certificates for Payment have been previously issued and payments received from the Owner shall, to the best of the Contractor's knowledge, information and belief, be free and clear of liens, claims, security interests or encumbrances in favor of the Contractor, Subcontractors, material suppliers, or other persons or entities making a claim by reason of having provided labor, materials and equipment relating to the Work.

AIA Document A201™ – 1997 Copyright © 1888, 1911, 1915, 1918, 1925, 1937, 1951, 1958, 1961, 1963, 1966, 1970, 1976, 1987 and 1997 by The American Institute of Architects. All rights reserved. WARNING: This AIA® Document is protected by U.S. Copyright Law and International Treaties. Unauthorized reproduction or distribution of this AIA® Document, or any portion of it, may result in severe civil and criminal penalties, and will be prosecuted to the maximum extent possible under the law. Purchasers are not permitted to reproduce this document. To report copyright violations of AIA Contract Documents, e-mail The American Institute of Architects' legal counsel, copyright@aia.org.

§ 9.4 CERTIFICATES FOR PAYMENT

§ 9.4.1 The Architect will, within seven days after receipt of the Contractor's Application for Payment, either issue to the Owner a Certificate for Payment, with a copy to the Contractor, for such amount as the Architect determines is properly due, or notify the Contractor and Owner in writing of the Architect's reasons for withholding certification in whole or in part as provided in Section 9.5.1.

§ 9.4.2 The issuance of a Certificate for Payment will constitute a representation by the Architect to the Owner, based on the Architect's evaluation of the Work and the data comprising the Application for Payment, that the Work has progressed to the point indicated and that, to the best of the Architect's knowledge, information and helief, the quality of the Work is in accordance with the Contract Documents. The foregoing representations are subject to an evaluation of the Work for conformance with the Contract Documents upon Substantial Completion, to results of subsequent tests and inspections, to correction of minor deviations from the Contract Documents prior to completion and to specific qualifications expressed by the Architect. The issuance of a Certificate for Payment will further constitute a representation that the Contractor is entitled to payment in the amount certified. However, the issuance of a Certificate for Payment will not be a representation that the Architect has (1) made exhaustive or continuous on-site inspections to check the quality or quantity of the Work, (2) reviewed construction means, methods, techniques, sequences or procedures, (3) reviewed copies of requisitions received from Subcontractors and material suppliers and other data requested by the Owner to substantiate the Contractor's right to payment, or (4) made examination to ascertain how or for what purpose the Contractor has used money previously paid on account of the Contract Sum.

§ 9.5 DECISIONS TO WITHHOLD CERTIFICATION

§ 9.5.1 The Architect may withhold a Certificate for Payment in whole or in part, to the extent reasonably necessary to protect the Owner, if in the Architect's opinion the representations to the Owner required by Section 9.4.2 cannot be made. If the Architect is unable to certify payment in the amount of the Application, the Architect will notify the Contractor and Owner as provided in Section 9.4.1. If the Contractor and Architect cannot agree on a revised amount, the Architect will promptly issue a Certificate for Payment for the amount for which the Architect is able to make such representations to the Owner. The Architect may also withhold a Certificate for Payment or, because of subsequently discovered evidence, may nullify the whole or a part of a Certificate for Payment previously issued, to such extent as may be necessary in the Architect's opinion to protect the Owner from loss for which the Contractor is responsible, including loss resulting from acts and omissions described in Section 3.3.2, because of:

- .1 defective Work not remedied;
- .2 third party claims filed or reasonable evidence indicating probable filing of such claims unless security acceptable to the Owner is provided by the Contractor;
- .3 failure of the Contractor to make payments properly to Subcontractors or for labor, materials or equipment;
- .4 reasonable evidence that the Work cannot be completed for the unpaid balance of the Contract Sum;
- .5 damage to the Owner or another contractor;
- .6 reasonable evidence that the Work will not be completed within the Contract Time, and that the unpaid balance would not be adequate to cover actual or liquidated damages for the anticipated delay; or
- .7 persistent failure to carry out the Work in accordance with the Contract Documents.

§ 9.5.2 When the above reasons for withholding certification are removed, certification will be made for amounts previously withheld.

§ 9.6 PROGRESS PAYMENTS

§ 9.6.1 After the Architect has issued a Certificate for Payment, the Owner shall make payment in the manner and within the time provided in the Contract Documents, and shall so notify the Architect.

§ 9.6.2 The Contractor shall promptly pay each Subcontractor, upon receipt of payment from the Owner, out of the amount paid to the Contractor on account of such Subcontractor's portion of the Work, the amount to which said Subcontractor is entitled, reflecting percentages actually retained from payments to the Contractor on account of such Subcontractor's portion of the Work. The Contractor shall, by appropriate agreement with each Subcontractor, require each Subcontractor to make payments to Sub-subcontractors in a similar manner.

§ 9.6.3 The Architect will, on request, furnish to a Subcontractor, if practicable, information regarding percentages of completion or amounts applied for by the Contractor and action taken thereon by the Architect and Owner on account of portions of the Work done by such Subcontractor.

AIA Document A201™ – 1997 Copyright © 1888, 1911, 1915, 1918, 1925, 1937, 1951, 1958, 1961, 1963, 1966, 1970, 1976, 1987 and 1997 by The American Institute of Architects. All rights reserved. WARNING: This AIA® Document is protected by U.S. Copyright Law and International Treaties. Unauthorized reproduction or distribution of this AIA® Document, or any portion of it, may result in severe civil and criminal penalties, and will be prosecuted to the maximum extent possible under the law. Purchasers are not permitted to reproduce this document. To report copyright violations of AIA Contract Documents, e-mail The American Institute of Architects' legal counsel, copyright@aia.org.

§ 9.6.4 Neither the Owner nor Architect shall have an obligation to pay or to see to the payment of money to a Subcontractor except as may otherwise be required by law.

§ 9.6.5 Payment to material suppliers shall be treated in a manner similar to that provided in Sections 9.6.2, 9.6.3 and 9.6.4.

§ 9.6.6 A Certificate for Payment, a progress payment, or partial or entire use or occupancy of the Project by the Owner shall not constitute acceptance of Work not in accordance with the Contract Documents.

§ 9.6.7 Unless the Contractor provides the Owner with a payment bond in the full penal sum of the Contract Sum, payments received by the Contractor for Work properly performed by Subcontractors and suppliers shall be held by the Contractor for those Subcontractors or suppliers who performed Work or furnished materials, or both, under contract with the Contractor for which payment was made by the Owner. Nothing contained herein shall require money to be placed in a separate account and not commingled with money of the Contractor, shall create any fiduciary liability or tort liability on the part of the Contractor for breach of trust or shall entitle any person or entity to an award of punitive damages against the Contractor for breach of the requirements of this provision.

§ 9.7 FAILURE OF PAYMENT

§ 9.7.1 If the Architect does not issue a Certificate for Payment, through no fault of the Contractor, within seven days after receipt of the Contractor's Application for Payment, or if the Owner does not pay the Contractor within seven days after the date established in the Contract Documents the amount certified by the Architect or awarded by arbitration, then the Contractor may, upon seven additional days' written notice to the Owner and Architect, stop the Work until payment of the amount owing has been received. The Contract Time shall be extended appropriately and the Contract Sum shall be increased by the amount of the Contractor's reasonable costs of shut-down, delay and start-up, plus interest as provided for in the Contract Documents.

§ 9.8 SUBSTANTIAL COMPLETION

§ 9.8.1 Substantial Completion is the stage in the progress of the Work when the Work or designated portion thereof is sufficiently complete in accordance with the Contract Documents so that the Owner can occupy or utilize the Work for its intended use.

§ 9.8.2 When the Contractor considers that the Work, or a portion thereof which the Owner agrees to accept separately, is substantially complete, the Contractor shall prepare and submit to the Architect a comprehensive list of items to be completed or corrected prior to final payment. Failure to include an item on such list does not alter the responsibility of the Contractor to complete all Work in accordance with the Contract Documents.

§ 9.8.3 Upon receipt of the Contractor's list, the Architect will make an inspection to determine whether the Work or designated portion thereof is substantially complete. If the Architect's inspection discloses any item, whether or not included on the Contractor's list, which is not sufficiently complete in accordance with the Contract Documents so that the Owner can occupy or utilize the Work or designated portion thereof for its intended use, the Contractor shall, before issuance of the Certificate of Substantial Completion, complete or correct such item upon notification by the Architect. In such case, the Contractor shall then submit a request for another inspection by the Architect to determine Substantial Completion.

§ 9.8.4 When the Work or designated portion thereof is substantially complete, the Architect will prepare a Certificate of Substantial Completion which shall establish the date of Substantial Completion, shall establish responsibilities of the Owner and Contractor for security, maintenance, heat, utilities, damage to the Work and insurance, and shall fix the time within which the Contractor shall finish all items on the list accompanying the Certificate. Warranties required by the Contract Documents shall commence on the date of Substantial Completion of the Work or designated portion thereof unless otherwise provided in the Certificate of Substantial Completion.

§ 9.8.5 The Certificate of Substantial Completion shall be submitted to the Owner and Contractor for their written acceptance of responsibilities assigned to them in such Certificate. Upon such acceptance and consent of surety, if any, the Owner shall make payment of retainage applying to such Work or designated portion thereof. Such payment shall be adjusted for Work that is incomplete or not in accordance with the requirements of the Contract Documents.

§ 9.9 PARTIAL OCCUPANCY OR USE

§ 9.9.1 The Owner may occupy or use any completed or partially completed portion of the Work at any stage when such portion is designated by separate agreement with the Contractor, provided such occupancy or use is consented

AIA Document A201™ – 1997 Copyright © 1888, 1911, 1915, 1918, 1925, 1937, 1951, 1958, 1961, 1963, 1966, 1970, 1976, 1987 and 1997 by The American Institute of Architects. All rights reserved. WARNING: This AIA® Document is protected by U.S. Copyright Law and International Treaties. Unauthorized reproduction or distribution of this AIA® Document, or any portion of it, may result in severe civil and criminal penalties, and will be prosecuted to the maximum extent possible under the law. Purchasers are not permitted to reproduce this document. To report copyright violations of AIA Contract Documents, e-mail The American Institute of Architects' legal counsel, copyright@aia.org.

to by the insurer as required under Section 11.4.1.5 and authorized by public authorities having jurisdiction over the Work. Such partial occupancy or use may commence whether or not the portion is substantially complete, provided the Owner and Contractor have accepted in writing the responsibilities assigned to each of them for payments, retainage, if any, security, maintenance, heat, utilities, damage to the Work and insurance, and have agreed in writing concerning the period for correction of the Work and commencement of warranties required by the Contract Documents. When the Contractor considers a portion substantially complete, the Contractor shall prepare and submit a list to the Architect as provided under Section 9.8.2. Consent of the Contractor to partial occupancy or use shall not be unreasonably withheld. The stage of the progress of the Work shall be determined by written agreement between the Owner and Contractor or, if no agreement is reached, by decision of the Architect.

§ 9.9.2 Immediately prior to such partial occupancy or use, the Owner, Contractor and Architect shall jointly inspect the area to be occupied or portion of the Work to be used in order to determine and record the condition of the Work.

§ 9.9.3 Unless otherwise agreed upon, partial occupancy or use of a portion or portions of the Work shall not constitute acceptance of Work not complying with the requirements of the Contract Documents.

§ 9.10 FINAL COMPLETION AND FINAL PAYMENT

§ 9.10.1 Upon receipt of written notice that the Work is ready for final inspection and acceptance and upon receipt of a final Application for Payment, the Architect will promptly make such inspection and, when the Architect finds the Work acceptable under the Contract Documents and the Contract fully performed, the Architect will promptly issue a final Certificate for Payment stating that to the best of the Architect's knowledge, information and belief, and on the basis of the Architect's on-site visits and inspections, the Work has been completed in accordance with terms and conditions of the Contract Documents and that the entire balance found to be due the Contractor and noted in the final Certificate is due and payable. The Architect's final Certificate for Payment will constitute a further representation that conditions listed in Section 9.10.2 as precedent to the Contractor's being entitled to final payment have been fulfilled.

§ 9.10.2 Neither final payment nor any remaining retained percentage shall become due until the Contractor submits to the Architect (1) an affidavit that payrolls, bills for materials and equipment, and other indebtedness connected with the Work for which the Owner or the Owner's property might be responsible or encumbered (less amounts withheld by Owner) have been paid or otherwise satisfied, (2) a certificate evidencing that insurance required by the Contract Documents to remain in force after final payment is currently in effect and will not be canceled or allowed to expire until at least 30 days' prior written notice has been given to the Owner, (3) a written statement that the Contractor knows of no substantial reason that the insurance will not be renewable to cover the period required by the Contract Documents, (4) consent of surety, if any, to final payment and (5), if required by the Owner, other data establishing payment or satisfaction of obligations, such as receipts, releases and waivers of liens, claims, security interests or encumbrances arising out of the Contract, to the extent and in such form as may be designated by the Owner. If a Subcontractor refuses to furnish a release or waiver required by the Owner, the Contractor may furnish a bond satisfactory to the Owner to indemnify the Owner against such lien. If such lien remains unsatisfied after payments are made, the Contractor shall refund to the Owner all money that the Owner may be compelled to pay in discharging such lien, including all costs and reasonable attorneys' fees.

§ 9.10.3 If, after Substantial Completion of the Work, final completion thereof is materially delayed through no fault of the Contractor or by issuance of Change Orders affecting final completion, and the Architect so confirms, the Owner shall, upon application by the Contractor and certification by the Architect, and without terminating the Contract, make payment of the balance due for that portion of the Work fully completed and accepted. If the remaining balance for Work not fully completed or corrected is less than retainage stipulated in the Contract Documents, and if bonds have been furnished, the written consent of surety to payment of the balance due for that portion of the Work fully completed and accepted shall be submitted by the Contractor to the Architect prior to certification of such payment. Such payment shall be made under terms and conditions governing final payment, except that it shall not constitute a waiver of claims.

§ 9.10.4 The making of final payment shall constitute a waiver of Claims by the Owner except those arising from:

- **.1** liens, Claims, security interests or encumbrances arising out of the Contract and unsettled;
- **.2** failure of the Work to comply with the requirements of the Contract Documents; or
- **.3** terms of special warranties required by the Contract Documents.

AIA Document A201™ – 1997 Copyright © 1888, 1911, 1915, 1918, 1925, 1937, 1951, 1958, 1961, 1963, 1966, 1970, 1976, 1987 and 1997 by The American Institute of Architects. All rights reserved. WARNING: This AIA® Document is protected by U.S. Copyright Law and International Treaties. Unauthorized reproduction or distribution of this AIA® Document, or any portion of it, may result in severe civil and criminal penalties, and will be prosecuted to the maximum extent possible under the law. Purchasers are not permitted to reproduce this document. To report copyright violations of AIA Contract Documents, e-mail The American Institute of Architects' legal counsel, copyright@aia.org.

§ 9.10.5 Acceptance of final payment by the Contractor, a Subcontractor or material supplier shall constitute a waiver of claims by that payee except those previously made in writing and identified by that payee as unsettled at the time of final Application for Payment.

ARTICLE 10 PROTECTION OF PERSONS AND PROPERTY

§ 10.1 SAFETY PRECAUTIONS AND PROGRAMS

§ 10.1.1 The Contractor shall be responsible for initiating, maintaining and supervising all safety precautions and programs in connection with the performance of the Contract.

§ 10.2 SAFETY OF PERSONS AND PROPERTY

§ 10.2.1 The Contractor shall take reasonable precautions for safety of, and shall provide reasonable protection to prevent damage, injury or loss to:

- **.1** employees on the Work and other persons who may be affected thereby;
- **.2** the Work and materials and equipment to be incorporated therein, whether in storage on or off the site, under care, custody or control of the Contractor or the Contractor's Subcontractors or Sub-subcontractors; and
- **.3** other property at the site or adjacent thereto, such as trees, shrubs, lawns, walks, pavements, roadways, structures and utilities not designated for removal, relocation or replacement in the course of construction.

§ 10.2.2 The Contractor shall give notices and comply with applicable laws, ordinances, rules, regulations and lawful orders of public authorities bearing on safety of persons or property or their protection from damage, injury or loss.

§ 10.2.3 The Contractor shall erect and maintain, as required by existing conditions and performance of the Contract, reasonable safeguards for safety and protection, including posting danger signs and other warnings against hazards, promulgating safety regulations and notifying owners and users of adjacent sites and utilities.

§ 10.2.4 When use or storage of explosives or other hazardous materials or equipment or unusual methods are necessary for execution of the Work, the Contractor shall exercise utmost care and carry on such activities under supervision of properly qualified personnel.

§ 10.2.5 The Contractor shall promptly remedy damage and loss (other than damage or loss insured under property insurance required by the Contract Documents) to property referred to in Sections 10.2.1.2 and 10.2.1.3 caused in whole or in part by the Contractor, a Subcontractor, a Sub-subcontractor, or anyone directly or indirectly employed by any of them, or by anyone for whose acts they may be liable and for which the Contractor is responsible under Sections 10.2.1.2 and 10.2.1.3, except damage or loss attributable to acts or omissions of the Owner or Architect or anyone directly or indirectly employed by either of them, or by anyone for whose acts either of them may be liable, and not attributable to the fault or negligence of the Contractor. The foregoing obligations of the Contractor are in addition to the Contractor's obligations under Section 3.18.

§ 10.2.6 The Contractor shall designate a responsible member of the Contractor's organization at the site whose duty shall be the prevention of accidents. This person shall be the Contractor's superintendent unless otherwise designated by the Contractor in writing to the Owner and Architect.

§ 10.2.7 The Contractor shall not load or permit any part of the construction or site to be loaded so as to endanger its safety.

§ 10.3 HAZARDOUS MATERIALS

§ 10.3.1 If reasonable precautions will be inadequate to prevent foreseeable bodily injury or death to persons resulting from a material or substance, including but not limited to asbestos or polychlorinated biphenyl (PCB), encountered on the site by the Contractor, the Contractor shall, upon recognizing the condition, immediately stop Work in the affected area and report the condition to the Owner and Architect in writing.

§ 10.3.2 The Owner shall obtain the services of a licensed laboratory to verify the presence or absence of the material or substance reported by the Contractor and, in the event such material or substance is found to be present, to verify that it has been rendered harmless. Unless otherwise required by the Contract Documents, the Owner shall furnish in writing to the Contractor and Architect the names and qualifications of persons or entities who are to perform tests verifying the presence or absence of such material or substance or who are to perform the task of removal or safe containment of such material or substance. The Contractor and the Architect will promptly reply to the Owner in

AIA Document A201™ – 1997 Copyright © 1888, 1911, 1915, 1918, 1925, 1937, 1951, 1958, 1961, 1963, 1966, 1970, 1976, 1987 and 1997 by The American Institute of Architects. All rights reserved. WARNING: This AIA® Document is protected by U.S. Copyright Law and International Treaties. Unauthorized reproduction or distribution of this AIA® Document, or any portion of it, may result in severe civil and criminal penalties, and will be prosecuted to the maximum extent possible under the law. Purchasers are not permitted to reproduce this document. To report copyright violations of AIA Contract Documents, e-mail The American Institute of Architects' legal counsel, copyright@aia.org.

writing stating whether or not either has reasonable objection to the persons or entities proposed by the Owner. If either the Contractor or Architect has an objection to a person or entity proposed by the Owner, the Owner shall propose another to whom the Contractor and the Architect have no reasonable objection. When the material or substance has been rendered harmless, Work in the affected area shall resume upon written agreement of the Owner and Contractor. The Contract Time shall be extended appropriately and the Contract Sum shall be increased in the amount of the Contractor's reasonable additional costs of shut-down, delay and start-up, which adjustments shall be accomplished as provided in Article 7.

§ 10.3.3 To the fullest extent permitted by law, the Owner shall indemnify and hold harmless the Contractor, Subcontractors, Architect, Architect's consultants and agents and employees of any of them from and against claims, damages, losses and expenses, including but not limited to attorneys' fees, arising out of or resulting from performance of the Work in the affected area if in fact the material or substance presents the risk of bodily injury or death as described in Section 10.3.1 and has not been rendered harmless, provided that such claim, damage, loss or expense is attributable to bodily injury, sickness, disease or death, or to injury to or destruction of tangible property (other than the Work itself) and provided that such damage, loss or expense is not due to the sole negligence of a party seeking indemnity.

§ 10.4 The Owner shall not be responsible under Section 10.3 for materials and substances brought to the site by the Contractor unless such materials or substances were required by the Contract Documents.

§ 10.5 If, without negligence on the part of the Contractor, the Contractor is held liable for the cost of remediation of a hazardous material or substance solely by reason of performing Work as required by the Contract Documents, the Owner shall indemnify the Contractor for all cost and expense thereby incurred.

§ 10.6 EMERGENCIES

§ 10.6.1 In an emergency affecting safety of persons or property, the Contractor shall act, at the Contractor's discretion, to prevent threatened damage, injury or loss. Additional compensation or extension of time claimed by the Contractor on account of an emergency shall be determined as provided in Section 4.3 and Article 7.

ARTICLE 11 INSURANCE AND BONDS

§ 11.1 CONTRACTOR'S LIABILITY INSURANCE

§ 11.1.1 The Contractor shall purchase from and maintain in a company or companies lawfully authorized to do business in the jurisdiction in which the Project is located such insurance as will protect the Contractor from claims set forth below which may arise out of or result from the Contractor's operations under the Contract and for which the Contractor may be legally liable, whether such operations be by the Contractor or by a Subcontractor or by anyone directly or indirectly employed by any of them, or by anyone for whose acts any of them may be liable:

- **.1** claims under workers' compensation, disability benefit and other similar employee benefit acts which are applicable to the Work to be performed;
- **.2** claims for damages because of bodily injury, occupational sickness or disease, or death of the Contractor's employees;
- **.3** claims for damages because of bodily injury, sickness or disease, or death of any person other than the Contractor's employees;
- **.4** claims for damages insured by usual personal injury liability coverage;
- **.5** claims for damages, other than to the Work itself, because of injury to or destruction of tangible property, including loss of use resulting therefrom;
- **.6** claims for damages because of bodily injury, death of a person or property damage arising out of ownership, maintenance or use of a motor vehicle;
- **.7** claims for bodily injury or property damage arising out of completed operations; and
- **.8** claims involving contractual liability insurance applicable to the Contractor's obligations under Section 3.18.

§ 11.1.2 The insurance required by Section 11.1.1 shall be written for not less than limits of liability specified in the Contract Documents or required by law, whichever coverage is greater. Coverages, whether written on an occurrence or claims-made basis, shall be maintained without interruption from date of commencement of the Work until date of final payment and termination of any coverage required to be maintained after final payment.

§ 11.1.3 Certificates of insurance acceptable to the Owner shall be filed with the Owner prior to commencement of the Work. These certificates and the insurance policies required by this Section 11.1 shall contain a provision that coverages afforded under the policies will not be canceled or allowed to expire until at least 30 days' prior written

AIA Document A201™ – 1997 Copyright © 1888, 1911, 1915, 1918, 1925, 1937, 1951, 1958, 1961, 1963, 1966, 1970, 1976, 1987 and 1997 by The American Institute of Architects. All rights reserved. WARNING: This AIA® Document is protected by U.S. Copyright Law and International Treaties. Unauthorized reproduction or distribution of this AIA® Document, or any portion of it, may result in severe civil and criminal penalties, and will be prosecuted to the maximum extent possible under the law. Purchasers are not permitted to reproduce this document. To report copyright violations of AIA Contract Documents, e-mail The American Institute of Architects' legal counsel, copyright@aia.org.

notice has been given to the Owner. If any of the foregoing insurance coverages are required to remain in force after final payment and are reasonably available, an additional certificate evidencing continuation of such coverage shall be submitted with the final Application for Payment as required by Section 9.10.2. Information concerning reduction of coverage on account of revised limits or claims paid under the General Aggregate, or both, shall be furnished by the Contractor with reasonable promptness in accordance with the Contractor's information and belief.

§ 11.2 OWNER'S LIABILITY INSURANCE

§ 11.2.1 The Owner shall be responsible for purchasing and maintaining the Owner's usual liability insurance.

§ 11.3 PROJECT MANAGEMENT PROTECTIVE LIABILITY INSURANCE

§ 11.3.1 Optionally, the Owner may require the Contractor to purchase and maintain Project Management Protective Liability insurance from the Contractor's usual sources as primary coverage for the Owner's, Contractor's and Architect's vicarious liability for construction operations under the Contract. Unless otherwise required by the Contract Documents, the Owner shall reimburse the Contractor by increasing the Contract Sum to pay the cost of purchasing and maintaining such optional insurance coverage, and the Contractor shall not be responsible for purchasing any other liability insurance on behalf of the Owner. The minimum limits of liability purchased with such coverage shall be equal to the aggregate of the limits required for Contractor's Liability Insurance under Sections 11.1.1.2 through 11.1.1.5.

§ 11.3.2 To the extent damages are covered by Project Management Protective Liability insurance, the Owner, Contractor and Architect waive all rights against each other for damages, except such rights as they may have to the proceeds of such insurance. The policy shall provide for such waivers of subrogation by endorsement or otherwise.

§ 11.3.3 The Owner shall not require the Contractor to include the Owner, Architect or other persons or entities as additional insureds on the Contractor's Liability Insurance coverage under Section 11.1.

§ 11.4 PROPERTY INSURANCE

§ 11.4.1 Unless otherwise provided, the Owner shall purchase and maintain, in a company or companies lawfully authorized to do business in the jurisdiction in which the Project is located, property insurance written on a builder's risk "all-risk" or equivalent policy form in the amount of the initial Contract Sum, plus value of subsequent Contract modifications and cost of materials supplied or installed by others, comprising total value for the entire Project at the site on a replacement cost basis without optional deductibles. Such property insurance shall be maintained, unless otherwise provided in the Contract Documents or otherwise agreed in writing by all persons and entities who are beneficiaries of such insurance, until final payment has been made as provided in Section 9.10 or until no person or entity other than the Owner has an insurable interest in the property required by this Section 11.4 to be covered, whichever is later. This insurance shall include interests of the Owner, the Contractor, Subcontractors and Sub-subcontractors in the Project.

§ 11.4.1.1 Property insurance shall be on an "all-risk" or equivalent policy form and shall include, without limitation, insurance against the perils of fire (with extended coverage) and physical loss or damage including, without duplication of coverage, theft, vandalism, malicious mischief, collapse, earthquake, flood, windstorm, falsework, testing and startup, temporary buildings and debris removal including demolition occasioned by enforcement of any applicable legal requirements, and shall cover reasonable compensation for Architect's and Contractor's services and expenses required as a result of such insured loss.

§ 11.4.1.2 If the Owner does not intend to purchase such property insurance required by the Contract and with all of the coverages in the amount described above, the Owner shall so inform the Contractor in writing prior to commencement of the Work. The Contractor may then effect insurance which will protect the interests of the Contractor, Subcontractors and Sub-subcontractors in the Work, and by appropriate Change Order the cost thereof shall be charged to the Owner. If the Contractor is damaged by the failure or neglect of the Owner to purchase or maintain insurance as described above, without so notifying the Contractor in writing, then the Owner shall bear all reasonable costs properly attributable thereto.

§ 11.4.1.3 If the property insurance requires deductibles, the Owner shall pay costs not covered because of such deductibles.

§ 11.4.1.4 This property insurance shall cover portions of the Work stored off the site, and also portions of the Work in transit.

AIA Document A201™ – 1997 Copyright © 1888, 1911, 1915, 1918, 1925, 1937, 1951, 1958, 1961, 1963, 1966, 1970, 1976, 1987 and 1997 by The American Institute of Architects. All rights reserved. WARNING: This AIA® Document is protected by U.S. Copyright Law and International Treaties. Unauthorized reproduction or distribution of this AIA® Document, or any portion of it, may result in severe civil and criminal penalties, and will be prosecuted to the maximum extent possible under the law. Purchasers are not permitted to reproduce this document. To report copyright violations of AIA Contract Documents, e-mail The American Institute of Architects' legal counsel, copyright@aia.org.

§ 11.4.1.5 Partial occupancy or use in accordance with Section 9.9 shall not commence until the insurance company or companies providing property insurance have consented to such partial occupancy or use by endorsement or otherwise. The Owner and the Contractor shall take reasonable steps to obtain consent of the insurance company or companies and shall, without mutual written consent, take no action with respect to partial occupancy or use that would cause cancellation, lapse or reduction of insurance.

§ 11.4.2 Boiler and Machinery Insurance. The Owner sball purchase and maintain boiler and machinery insurance required by the Contract Documents or by law, which sball specifically cover such insured objects during installation and nntil final acceptance by the Owner; this insurance shall include interests of the Owner, Contractor, Subcontractors and Sub-subcontractors in the Work, and the Owner and Contractor shall be named insureds.

§ 11.4.3 Loss of Use Insurance. The Owner, at the Owner's option, may purchase and maintain such insurance as will insure the Owner against loss of use of the Owner's property due to fire or other hazards, however caused. The Owner waives all rights of action against the Contractor for loss of use of the Owner's property, including consequential losses due to fire or other hazards however caused.

§ 11.4.4 If the Contractor requests in writing that insurance for risks other than those described herein or other special causes of loss be included in the property insurance policy, the Owner shall, if possible, include such insurance, and the cost thereof shall be charged to the Contractor by appropriate Change Order.

§ 11.4.5 If during the Project construction period the Owner insures properties, real or personal or both, at or adjacent to the site by property insurance under policies separate from those insuring the Project, or if after final payment property insurance is to be provided on the completed Project througb a policy or policies other than those insuring the Project during the construction period, the Owner shall waive all rights in accordance with the terms of Section 11.4.7 for damages caused by fire or other causes of loss covered by this separate property insurance. All separate policies shall provide this waiver of subrogation by endorsement or otherwise.

§ 11.4.6 Before an exposure to loss may occur, the Owner shall file with the Contractor a copy of each policy that includes insurance coverages required by this Section 11.4. Each policy shall contain all generally applicable conditions, definitions, exclusions and endorsements related to this Project. Each policy shall contain a provision that the policy will not be canceled or allowed to expire, and that its limits will not be reduced, until at least 30 days' prior written notice has been given to the Contractor.

§ 11.4.7 Waivers of Subrogation. The Owner and Contractor waive all rights against (1) each other and any of their subcontractors, sub-subcontractors, agents and employees, each of the other, and (2) the Architect, Architect's consultants, separate contractors described in Article 6, if any, and any of their subcontractors, sub-subcontractors, agents and employees, for damages caused by fire or other causes of loss to the extent covered by property insurance obtained pursuant to this Section 11.4 or other property insurance applicable to the Work, except such rights as they have to proceeds of such insurance held by the Owner as fiduciary. The Owner or Contractor, as appropriate, shall require of the Architect, Architect's consultants, separate contractors described in Article 6, if any, and the subcontractors, sub-subcontractors, agents and employees of any of them, by appropriate agreements, written where legally required for validity, similar waivers each in favor of other parties enumerated herein. The policies shall provide sucb waivers of subrogation by endorsement or otherwise. A waiver of subrogation shall be effective as to a person or entity even though that person or entity would otherwise have a duty of indemnification, contractual or otherwise, did not pay the insurance premium directly or indirectly, and whether or not the person or entity had an insurable interest in the property damaged.

§ 11.4.8 A loss insured under Owner's property insurance shall be adjusted hy the Owner as fiduciary and made payable to the Owner as fiduciary for the insureds, as their interests may appear, subject to requirements of any applicable mortgagee clause and of Section 11.4.10. The Contractor shall pay Subcontractors their just shares of insurance proceeds received by the Contractor, and by appropriate agreements, written where legally required for validity, shall require Suhcontractors to make payments to their Sub-subcontractors in similar manner.

§ 11.4.9 If required in writing by a party in interest, the Owner as fiduciary shall, upon occurrence of an insured loss, give bond for proper performance of the Owner's duties. The cost of required bonds shall be charged against proceeds received as fiduciary. The Owner shall deposit in a separate account proceeds so received, which the Owner shall distribute in accordance with such agreement as the parties in interest may reach, or in accordance with an arbitration award in which case the procedure shall be as provided in Section 4.6. If after such loss no other

AIA Document A201™ – 1997 Copyright © 1888, 1911, 1915, 1918, 1925, 1937, 1951, 1958, 1961, 1963, 1966, 1970, 1976, 1987 and 1997 by The American Institute of Architects. All rights reserved. WARNING: This AIA® Document is protected by U.S. Copyright Law and International Treaties. Unauthorized reproduction or distribution of this AIA® Document, or any portion of it, may result in severe civil and criminal penalties, and will be prosecuted to the maximum extent possible under the law. Purchasers are not permitted to reproduce this document. To report copyright violations of AIA Contract Documents, e-mail The American Institute of Architects' legal counsel, copyright@aia.org.

special agreement is made and unless the Owner terminates the Contract for convenience, replacement of damaged property shall be performed by the Contractor after notification of a Change in the Work in accordance with Article 7.

§ 11.4.10 The Owner as fiduciary shall have power to adjust and settle a loss with insurers unless one of the parties in interest shall object in writing within five days after occurrence of loss to the Owner's exercise of this power; if such objection is made, the dispute shall be resolved as provided in Sections 4.5 and 4.6. The Owner as fiduciary shall, in the case of arbitration, make settlement with insurers in accordance with directions of the arbitrators. If distribution of insurance proceeds by arbitration is required, the arbitrators will direct such distribution.

§ 11.5 PERFORMANCE BOND AND PAYMENT BOND

§ 11.5.1 The Owner shall have the right to require the Contractor to furnish bonds covering faithful performance of the Contract and payment of obligations arising thereunder as stipulated in bidding requirements or specifically required in the Contract Documents on the date of execution of the Contract.

§ 11.5.2 Upon the request of any person or entity appearing to be a potential beneficiary of bonds covering payment of obligations arising under the Contract, the Contractor shall promptly furnish a copy of the bonds or shall permit a copy to be made.

ARTICLE 12 UNCOVERING AND CORRECTION OF WORK

§ 12.1 UNCOVERING OF WORK

§ 12.1.1 If a portion of the Work is covered contrary to the Architect's request or to requirements specifically expressed in the Contract Documents, it must, if required in writing by the Architect, be uncovered for the Architect's examination and be replaced at the Contractor's expense without change in the Contract Time.

§ 12.1.2 If a portion of the Work has been covered which the Architect has not specifically requested to examine prior to its being covered, the Architect may request to see such Work and it shall be uncovered by the Contractor. If such Work is in accordance with the Contract Documents, costs of uncovering and replacement shall, by appropriate Change Order, be at the Owner's expense. If such Work is not in accordance with the Contract Documents, correction shall be at the Contractor's expense unless the condition was caused by the Owner or a separate contractor in which event the Owner shall be responsible for payment of such costs.

§ 12.2 CORRECTION OF WORK

§ 12.2.1 BEFORE OR AFTER SUBSTANTIAL COMPLETION

§ 12.2.1.1 The Contractor shall promptly correct Work rejected by the Architect or failing to conform to the requirements of the Contract Documents, whether discovered before or after Substantial Completion and whether or not fabricated, installed or completed. Costs of correcting such rejected Work, including additional testing and inspections and compensation for the Architect's services and expenses made necessary thereby, shall be at the Contractor's expense.

§ 12.2.2 AFTER SUBSTANTIAL COMPLETION

§ 12.2.2.1 In addition to the Contractor's obligations under Section 3.5, if, within one year after the date of Substantial Completion of the Work or designated portion thereof or after the date for commencement of warranties established under Section 9.9.1, or by terms of an applicable special warranty required by the Contract Documents, any of the Work is found to be not in accordance with the requirements of the Contract Documents, the Contractor shall correct it promptly after receipt of written notice from the Owner to do so unless the Owner has previously given the Contractor a written acceptance of such condition. The Owner shall give such notice promptly after discovery of the condition. During the one-year period for correction of Work, if the Owner fails to notify the Contractor and give the Contractor an opportunity to make the correction, the Owner waives the rights to require correction by the Contractor and to make a claim for breach of warranty. If the Contractor fails to correct nonconforming Work within a reasonable time during that period after receipt of notice from the Owner or Architect, the Owner may correct it in accordance with Section 2.4.

§ 12.2.2.2 The one-year period for correction of Work shall be extended with respect to portions of Work first performed after Substantial Completion by the period of time between Substantial Completion and the actual performance of the Work.

§ 12.2.2.3 The one-year period for correction of Work shall not be extended by corrective Work performed by the Contractor pursuant to this Section 12.2.

AIA Document A201™ – 1997 Copyright © 1888, 1911, 1915, 1918, 1925, 1937, 1951, 1958, 1961, 1963, 1966, 1970, 1976, 1987 and 1997 by The American Institute of Architects. All rights reserved. WARNING: This AIA® Document is protected by U.S. Copyright Law and International Treaties. Unauthorized reproduction or distribution of this AIA® Document, or any portion of it, may result in severe civil and criminal penalties, and will be prosecuted to the maximum extent possible under the law. Purchasers are not permitted to reproduce this document. To report copyright violations of AIA Contract Documents, e-mail The American Institute of Architects' legal counsel, copyright@aia.org.

§ 12.2.3 The Contractor shall remove from the site portions of the Work which are not in accordance with the requirements of the Contract Documents and are neither corrected by the Contractor nor accepted by the Owner.

§ 12.2.4 The Contractor shall bear the cost of correcting destroyed or damaged construction, whether completed or partially completed, of the Owner or separate contractors caused by the Contractor's correction or removal of Work which is not in accordance with the requirements of the Contract Documents.

§ 12.2.5 Nothing contained in this Section 12.2 shall be construed to establish a period of limitation with respect to other obligations which the Contractor might have under the Contract Documents. Establishment of the one-year period for correction of Work as described in Section 12.2.2 relates only to the specific obligation of the Contractor to correct the Work, and has no relationship to the time within which the obligation to comply with the Contract Documents may be sought to be enforced, nor to the time within which proceedings may be commenced to establish the Contractor's liability with respect to the Contractor's obligations other than specifically to correct the Work.

§ 12.3 ACCEPTANCE OF NONCONFORMING WORK

§ 12.3.1 If the Owner prefers to accept Work which is not in accordance with the requirements of the Contract Documents, the Owner may do so instead of requiring its removal and correction, in which case the Contract Sum will be reduced as appropriate and equitable. Such adjustment shall be effected whether or not final payment has been made.

ARTICLE 13 MISCELLANEOUS PROVISIONS

§ 13.1 GOVERNING LAW

§ 13.1.1 The Contract shall be governed by the law of the place where the Project is located.

§ 13.2 SUCCESSORS AND ASSIGNS

§ 13.2.1 The Owner and Contractor respectively bind themselves, their partners, successors, assigns and legal representatives to the other party hereto and to partners, successors, assigns and legal representatives of such other party in respect to covenants, agreements and obligations contained in the Contract Documents. Except as provided in Section 13.2.2, neither party to the Contract shall assign the Contract as a whole without written consent of the other. If either party attempts to make such an assignment without such consent, that party shall nevertheless remain legally responsible for all obligations under the Contract.

§ 13.2.2 The Owner may, without consent of the Contractor, assign the Contract to an institutional lender providing construction financing for the Project. In such event, the lender shall assume the Owner's rights and obligations under the Contract Documents. The Contractor shall execute all consents reasonably required to facilitate such assignment.

§ 13.3 WRITTEN NOTICE

§ 13.3.1 Written notice shall be deemed to have been duly served if delivered in person to the individual or a member of the firm or entity or to an officer of the corporation for which it was intended, or if delivered at or sent by registered or certified mail to the last business address known to the party giving notice.

§ 13.4 RIGHTS AND REMEDIES

§ 13.4.1 Duties and obligations imposed by the Contract Documents and rights and remedies available thereunder shall be in addition to and not a limitation of duties, obligations, rights and remedies otherwise imposed or available by law.

§ 13.4.2 No action or failure to act by the Owner, Architect or Contractor shall constitute a waiver of a right or duty afforded them under the Contract, nor shall such action or failure to act constitute approval of or acquiescence in a breach there under, except as may be specifically agreed in writing.

§ 13.5 TESTS AND INSPECTIONS

§ 13.5.1 Tests, inspections and approvals of portions of the Work required by the Contract Documents or by laws, ordinances, rules, regulations or orders of public authorities having jurisdiction shall be made at an appropriate time. Unless otherwise provided, the Contractor shall make arrangements for such tests, inspections and approvals with an independent testing laboratory or entity acceptable to the Owner, or with the appropriate public authority, and shall bear all related costs of tests, inspections and approvals. The Contractor shall give the Architect timely notice of when and where tests and inspections are to be made so that the Architect may be present for such procedures. The

AIA Document A201™ – 1997 Copyright © 1888, 1911, 1915, 1918, 1925, 1937, 1951, 1958, 1961, 1963, 1966, 1970, 1976, 1987 and 1997 by The American Institute of Architects. All rights reserved. WARNING: This AIA® Document is protected by U.S. Copyright Law and International Treaties. Unauthorized reproduction or distribution of this AIA® Document, or any portion of it, may result in severe civil and criminal penalties, and will be prosecuted to the maximum extent possible under the law. Purchasers are not permitted to reproduce this document. To report copyright violations of AIA Contract Documents, e-mail The American Institute of Architects' legal counsel, copyright@aia.org.

Owner shall bear costs of tests, inspections or approvals which do not become requirements until after bids are received or negotiations concluded.

§ 13.5.2 If the Architect, Owner or public authorities having jurisdiction determine that portions of the Work require additional testing, inspection or approval not included under Section 13.5.1, the Architect will, upon written authorization from the Owner, instruct the Contractor to make arrangements for such additional testing, inspection or approval by an entity acceptable to the Owner, and the Contractor shall give timely notice to the Architect of when and where tests and inspections are to be made so that the Architect may be present for such procedures. Such costs, except as provided in Section 13.5.3, shall be at the Owner's expense.

§ 13.5.3 If such procedures for testing, inspection or approval under Sections 13.5.1 and 13.5.2 reveal failure of the portions of the Work to comply with requirements established by the Contract Documents, all costs made necessary by such failure including those of repeated procedures and compensation for the Architect's services and expenses shall be at the Contractor's expense.

§ 13.5.4 Required certificates of testing, inspection or approval shall, unless otherwise required by the Contract Documents, be secured by the Contractor and promptly delivered to the Architect.

§ 13.5.5 If the Architect is to observe tests, inspections or approvals required by the Contract Documents, the Architect will do so promptly and, where practicable, at the normal place of testing.

§ 13.5.6 Tests or inspections conducted pursuant to the Contract Documents shall be made promptly to avoid unreasonable delay in the Work.

§ 13.6 INTEREST

§ 13.6.1 Payments due and unpaid under the Contract Documents shall bear interest from the date payment is due at such rate as the parties may agree upon in writing or, in the absence thereof, at the legal rate prevailing from time to time at the place where the Project is located.

§ 13.7 COMMENCEMENT OF STATUTORY LIMITATION PERIOD

§ 13.7.1 As between the Owner and Contractor:

.1 Before Substantial Completion. As to acts or failures to act occurring prior to the relevant date of Substantial Completion, any applicable statute of limitations shall commence to run and any alleged cause of action shall be deemed to have accrued in any and all events not later than such date of Substantial Completion;

.2 Between Substantial Completion and Final Certificate for Payment. As to acts or failures to act occurring subsequent to the relevant date of Substantial Completion and prior to issuance of the final Certificate for Payment, any applicable statute of limitations shall commence to run and any alleged cause of action shall be deemed to have accrued in any and all events not later than the date of issuance of the final Certificate for Payment; and

.3 After Final Certificate for Payment. As to acts or failures to act occurring after the relevant date of issuance of the final Certificate for Payment, any applicable statute of limitations shall commence to run and any alleged cause of action shall be deemed to have accrued in any and all events not later than the date of any act or failure to act by the Contractor pursuant to any Warranty provided under Section 3.5, the date of any correction of the Work or failure to correct the Work by the Contractor under Section 12.2, or the date of actual commission of any other act or failure to perform any duty or obligation by the Contractor or Owner, whichever occurs last.

ARTICLE 14 TERMINATION OR SUSPENSION OF THE CONTRACT

§ 14.1 TERMINATION BY THE CONTRACTOR

§ 14.1.1 The Contractor may terminate the Contract if the Work is stopped for a period of 30 consecutive days through no act or fault of the Contractor or a Subcontractor, Sub-subcontractor or their agents or employees or any other persons or entities performing portions of the Work under direct or indirect contract with the Contractor, for any of the following reasons:

.1 issuance of an order of a court or other public authority having jurisdiction which requires all Work to be stopped;

.2 an act of government, such as a declaration of national emergency which requires all Work to be stopped;

AIA Document A201™ – 1997 Copyright © 1888, 1911, 1915, 1918, 1925, 1937, 1951, 1958, 1961, 1963, 1966, 1970, 1976, 1987 and 1997 by The American Institute of Architects. All rights reserved. WARNING: This AIA® Document is protected by U.S. Copyright Law and International Treaties. Unauthorized reproduction or distribution of this AIA® Document, or any portion of it, may result in severe civil and criminal penalties, and will be prosecuted to the maximum extent possible under the law. Purchasers are not permitted to reproduce this document. To report copyright violations of AIA Contract Documents, e-mail The American Institute of Architects' legal counsel, copyright@aia.org.

.3 because the Architect has not issued a Certificate for Payment and has not notified the Contractor of the reason for withholding certification as provided in Section 9.4.1, or because the Owner has not made payment on a Certificate for Payment within the time stated in the Contract Documents; or

.4 the Owner has failed to furnish to the Contractor promptly, upon the Contractor's request, reasonable evidence as required by Section 2.2.1.

§ 14.1.2 The Contractor may terminate the Contract if, through no act or fault of the Contractor or a Subcontractor, Sub-subcontractor or their agents or employees or any other persons or entities performing portions of the Work under direct or indirect contract with the Contractor, repeated suspensions, delays or interruptions of the entire Work by the Owner as described in Section 14.3 constitute in the aggregate more than 100 percent of the total number of days scheduled for completion, or 120 days in any 365-day period, whichever is less.

§ 14.1.3 If one of the reasons described in Section 14.1.1 or 14.1.2 exists, the Contractor may, upon seven days' written notice to the Owner and Architect, terminate the Contract and recover from the Owner payment for Work executed and for proven loss with respect to materials, equipment, tools, and construction equipment and machinery, including reasonable overhead, profit and damages.

§ 14.1.4 If the Work is stopped for a period of 60 consecutive days through no act or fault of the Contractor or a Subcontractor or their agents or employees or any other persons performing portions of the Work under contract with the Contractor because the Owner has persistently failed to fulfill the Owner's obligations under the Contract Documents with respect to matters important to the progress of the Work, the Contractor may, upon seven additional days' written notice to the Owner and the Architect, terminate the Contract and recover from the Owner as provided in Section 14.1.3.

§ 14.2 TERMINATION BY THE OWNER FOR CAUSE

§ 14.2.1 The Owner may terminate the Contract if the Contractor:

.1 persistently or repeatedly refuses or fails to supply enough properly skilled workers or proper materials;

.2 fails to make payment to Subcontractors for materials or labor in accordance with the respective agreements between the Contractor and the Subcontractors;

.3 persistently disregards laws, ordinances, or rules, regulations or orders of a public authority having jurisdiction; or

.4 otherwise is guilty of substantial breach of a provision of the Contract Documents.

§ 14.2.2 When any of the above reasons exist, the Owner, upon certification by the Architect that sufficient cause exists to justify such action, may without prejudice to any other rights or remedies of the Owner and after giving the Contractor and the Contractor's surety, if any, seven days' written notice, terminate employment of the Contractor and may, subject to any prior rights of the surety:

.1 take possession of the site and of all materials, equipment, tools, and construction equipment and machinery thereon owned by the Contractor;

.2 accept assignment of subcontracts pursuant to Section 5.4; and

.3 finish the Work by whatever reasonable method the Owner may deem expedient. Upon request of the Contractor, the Owner shall furnish to the Contractor a detailed accounting of the costs incurred by the Owner in finishing the Work.

§ 14.2.3 When the Owner terminates the Contract for one of the reasons stated in Section 14.2.1, the Contractor shall not be entitled to receive further payment until the Work is finished.

§ 14.2.4 If the unpaid balance of the Contract Sum exceeds costs of finishing the Work, including compensation for the Architect's services and expenses made necessary thereby, and other damages incurred by the Owner and not expressly waived, such excess shall be paid to the Contractor. If such costs and damages exceed the unpaid balance, the Contractor shall pay the difference to the Owner. The amount to be paid to the Contractor or Owner, as the case may be, shall be certified by the Architect, upon application, and this obligation for payment shall survive termination of the Contract.

§ 14.3 SUSPENSION BY THE OWNER FOR CONVENIENCE

§ 14.3.1 The Owner may, without cause, order the Contractor in writing to suspend, delay or interrupt the Work in whole or in part for such period of time as the Owner may determine.

AIA Document A201™ – 1997 Copyright © 1888, 1911, 1915, 1918, 1925, 1937, 1951, 1958, 1961, 1963, 1966, 1970, 1976, 1987 and 1997 by The American Institute of Architects. All rights reserved. WARNING: This AIA® Document is protected by U.S. Copyright Law and International Treaties. Unauthorized reproduction or distribution of this AIA® Document, or any portion of it, may result in severe civil and criminal penalties, and will be prosecuted to the maximum extent possible under the law. Purchasers are not permitted to reproduce this document. To report copyright violations of AIA Contract Documents, e-mail The American Institute of Architects' legal counsel, copyright@aia.org.

§ 14.3.2 The Contract Sum and Contract Time shall be adjusted for increases in the cost and time caused by suspension, delay or interruption as described in Section 14.3.1. Adjustment of the Contract Sum shall include profit. No adjustment shall be made to the extent:

.1 that performance is, was or would have been so suspended, delayed or interrupted by another cause for which the Contractor is responsible; or

.2 that an equitable adjustment is made or denied under another provision of the Contract.

§ 14.4 TERMINATION BY THE OWNER FOR CONVENIENCE

§ 14.4.1 The Owner may, at any time, terminate the Contract for the Owner's convenience and without cause.

§ 14.4.2 Upon receipt of written notice from the Owner of such termination for the Owner's convenience, the Contractor shall:

.1 cease operations as directed by the Owner in the notice;

.2 take actions necessary, or that the Owner may direct, for the protection and preservation of the Work; and

.3 except for Work directed to be performed prior to the effective date of termination stated in the notice, terminate all existing subcontracts and purchase orders and enter into no further subcontracts and purchase orders.

§ 14.4.3 In case of such termination for the Owner's convenience, the Contractor shall be entitled to receive payment for Work executed, and costs incurred by reason of such termination, along with reasonable overhead and profit on the Work not executed.

AIA Document A201™ – 1997 Copyright © 1888, 1911, 1915, 1918, 1925, 1937, 1951, 1958, 1961, 1963, 1966, 1970, 1976, 1987 and 1997 by The American Institute of Architects. All rights reserved. WARNING: This AIA® Document is protected by U.S. Copyright Law and International Treaties. Unauthorized reproduction or distribution of this AIA® Document, or any portion of it, may result in severe civil and criminal penalties, and will be prosecuted to the maximum extent possible under the law. Purchasers are not permitted to reproduce this document. To report copyright violations of AIA Contract Documents, e-mail The American Institute of Architects' legal counsel, copyright@aia.org.

SECTION 011000 - SUMMARY OF WORK

PART 1 – GENERAL

1.1 RELATED DOCUMENTS

A. Drawings and general provisions of the Contract, including General and Supplementary Conditions and other Division-1 Specification Sections, apply to this Section.

1.2 PROJECT DESCRIPTION

A. The Project consists of replacing an existing, unballasted EPDM roof system with a new 2-ply modified roof system over the tapered insulation over an existing metal or gypsum deck at portions of the school. Sheet metal roofing, flashings and drainage items are also included. The Project also consists of replacing existing HVAC systems throughout portions of the school. Incidental to the work is replacement of existing ceilings and lighting systems throughout areas impacted by HVAC system replacement. Work also includes limited replacement of plumbing piping and fixtures, sinks and casework. The Contract Documents relevant to the work prepared by Hudson + Associates Architects and its affiliated consulting engineers are dated February 14, 2014.

Project Name:	**Grafton Bethel Elementary School** **Partial Roof & HVAC Replacement, Phase III**
Project Location:	Grafton Bethel Elementary School 410 Lakeside Drive Yorktown, VA 23692
Owner:	County of York School Board 302 Dare Road Yorktown, VA 23692
Architect:	Hudson + Associates, Architects PLLC 120 West Queens Way, Suite 201 Hampton, VA 23669

CONTRACTOR USE OF PREMISES

A. General: Use of premises, work and storage areas shall be discussed at the pre-construction conference. In general, areas will be made available immediately adjacent to the building for the storage of materials and work may be carried on between the hours of 6:30 am and 9:00 pm.

B. The administrative staff will occupy the building throughout the construction period. Visitors to the building during this time will be directed the office on the north side of the building.

C. A summer recreation program will utilize the gymnasium during the summer. Participants and staff will use the parking lot on the west side of the building.

D. The north parking lot and access to the building on that side shall be reserved for the Contractor and their forces.

OWNER OCCUPANCY

B. Full Owner Occupancy: Cooperate with the Owner during construction to minimize conflicts and facilitate Owner usage. Perform the Work so as not to interfere with the Owner's operations.

CONTRACT TIME

A. The Contractor shall have access to the site commencing with the Notice to Proceed. **The Work at the site shall start no earlier than Monday, June 16, 2014 and all work must be substantially completed by August 15, 2014.** Final Completion shall be no later than September 25, 2014.

B. The Contractor should plan on the following weather (rain and temperature) days for the project duration, including all time extensions made to the contract, up until final completion is given. Time extensions for this project will only be given if the actual rain days exceed the days listed below.

January	10 Days
February	9 Days
March	11 Days
April	11 Days
May	12 Days
June	10 Days
July	11 Days
August	10 Days
September	9 Days
October	7 Days
November	8 Days
December	10 Days

C. A day will be considered a weather day when, on a work (Monday through Friday) day, it rains at the job site so less than 4 hours of production can occur or when the chance of rain exceeds 70% as reported by a source agreed upon at the pre-construction meeting or when the temperature does not rise above 40 degrees for more than 4 hours. Weather delay claims must be made in

writing on the day they occur. Days that are weather days will be established by mutual agreement between the Owner and the Contractor on the day they occur, but the Owner will have final authority on that day to establish whether or not the day will be considered a weather day.

SCOPE OF WORK:

A. This project consists of the removal of approximately 48,900 SF of fully adhered, 40 mil EPDM roof membrane and insulation installed in 1990. Portions of the roof at Areas 'B,' 'C' and 'F,' totaling approximately 30,600 SF, are installed over a gypsum deck overlaid with gypsum fill that was roughly sloped 1/8-inch per 12" to a perimeter drainage system. The sloped gypsum fill shall remain. Approximately 18,300 SF of the roof is over sloped at 1/8-inch per 12" over metal deck at Areas 'E' and 'G.'

B. This project adds 1/8-inch per 12" minimum sloped insulation over the existing gypsum fill to produce intended minimum roof slopes of 1/4-inch per 12". The increased roof slope requires modifying/replacing a limited quantity of metal wall panels adjacent to Areas 'B' and 'C.

C. This project replaces a limited quantity of standing seam metal roofing. Limited quantities of new standing seam metal roofing will be added in small areas.

D. Area 'B' to be re-roofed has previously received new HVAC systems within and on top of the roof to be replaced. Supports for the rooftop equipment were designed under the previous phase to enable replacement of the roof while the equipment remains in place.

E. The Owner has previously ordered and obtained seven rooftop HVAC units that will be furnished to the Contractor for installation under this Contract. A summary describing these units is included on the Mechanical Drawings.

F. Replacement of HVAC systems is required at Areas 'C,' 'D2,' 'E,' 'F' and 'G.' Interior ceilings and lighting throughout these areas will also be replaced. New rooftop-mounted HVAC units will be required at all of these areas EXCEPT Area 'D2,' which was recently re-roofed under a previous phase.

G. Existing refrigeration systems at Kitchen walk-in coolers are to be replaced under this Contract. This includes interior evaporator coils, rooftop-mounted compressor/condenser units (one for freezer, one for refrigerator), refrigerant lines and control system.

H. Structural upgrades to the existing roof will be required at various locations for support of new rooftop MAUs, consisting of adding new beams and angles where needed on top of existing load-bearing masonry walls.

I. Interior plumbing work includes replacement of limited quantities of original galvanized steel water supply piping and limited replacement of fixtures.

J. Incidental interior renovations include prepping and painting walls and other surfaces throughout Areas 'C,' 'D2,' 'E,' 'F' and 'G.' Also included are limited replacement of cabinets and countertops, interior partition construction, door demolition and new door installation, new interior soffit construction, careful removal, cleaning and reinstallation of existing stage curtains and other minor, related aspects of work.

K. Work to be Performed by other Contractors: The York County School Division will employ others to accomplish the following related items:

1. Existing Movable Fixtures, Furniture and Equipment at all work areas will be temporarily removed, stored and reinstalled by others.
2. Existing audio-visual systems and equipment, including video and audio signal cabling, shall be temporarily removed, stored and reinstalled by others. This shall include ceiling-mounted projectors, local area speakers, and ceiling-hung, retractable projection screens. Power outlets for overhead projectors shall remain at ceilings, and shall be reinstalled in ceiling panels by others.
3. Existing fire detection, alarm and notification devices that are mounted in ceilings shall be temporarily removed, stored and reinstalled by others. This shall include smoke and heat detectors, audible and visual strobe notification devices.
4. Existing wireless data network antennae, where mounted in corridor ceilings, shall be temporarily removed, stored and reinstalled by others.
5. Existing building automation and security devices, including room occupant sensors, CCTV cameras and other detection devices, where mounted in existing ceilings, shall be temporarily removed, stored and reinstalled by others.

L. The Owner has conducted hazardous material testing in the building. No asbestos was identified. If during the course of the work suspicious material is encountered, immediately notify the Mr. Frank Pitchford, YCSD's Safety Manager (e-mail fpitchford@ycsd.york.va.us or phone (757) 876-8801). Mr. Pitchford will conduct testing and prepare abatement specifications and procedures as required.

MISCELLANEOUS PROVISIONS

A. The Contractor shall protect the existing facilities at all times during the course of construction. Any damages caused or patching needed as a result of their activities shall be repaired at no additional cost to the Owner. In general, patching, repair, and renovation work is intended to match, compliment and align with existing conditions.

B. The Contractor is to maintain the structural integrity of the existing building at all times. At no time is the removal or demolition of a structural element to occur without the approval of the Owner.

C. The Contractor must have a minimum of five (5) years experience and must have completed three (3) projects of a similar size and scope within the past three (3) years. Immediately after identifying the apparent low bidder that Contractor shall submit the names, addresses and phone numbers of the contact person, for each of these similar projects. These references may be used in determining the most qualified bidder irrespective of the low bid.

D. Contractor **shall not** have access to lounges, vending machines, restrooms or telephones in the existing school building. See Section 015000 for Temporary Facilities requirements.

E. Smoking and chewing of tobacco is **not allowed** on school property at any time, during the project. Persons found smoking or chewing tobacco may be removed from the construction site.

F. Possession or Use of Drugs and/or Alcohol is **illegal** on school property and **severely punishable**.

G. Possession, Display or Use of firearms, tasers, crossbows, knives or other weapons, including arrows and ammunition, is **illegal** on school property and **severely punishable**. This shall not apply to construction tools ordinarily employed in the type of work performed under this contract.

H. Condition of the Existing Building: The Contractor will be responsible for maintaining the building in a weathertight condition throughout the construction period and repair damage caused by construction operations. Take all precautions necessary to protect the building and its occupants during the construction period. Any damages caused to the Owner's property or property of any of the Owner's employees as a result of the Contractor's operations shall be repaired to the condition before the damage occurred, at the Contractor's expense.

I. The existing school is located in a predominantly residential area. The Contractor and its personnel shall at all times conduct the work so as to be cognizant and respectful of the nearby residences and families. Do not create undue noise or nuisances during course of the work. All contractor-owned,

subcontractor-owned and labor force personally-owned vehicles, plus all delivery vehicles, shall be operated in a safe and lawful manner on streets and nearby areas, aware of children playing. Excessive noise, vulgar language by workers, or otherwise inappropriate behavior while on School property will not be tolerated and may be cause for removal of personnel from the project site.

FEES AND PERMITS

A. Unless otherwise provided in the Contract Documents, the Contractor shall apply for and obtain all public permits, unless noted otherwise. Such permits include but are not necessarily limited to the following:

1. Building permit
2. Mechanical and electrical permits
3. Hazardous material abatement permits

B. York County will forgive the permit cost for the permits they issue.

PART 2 - PRODUCTS (Not applicable).

PART 3 - EXECUTION (Not applicable).

END OF SECTION 011000

SECTION 012100 – ALLOWANCES

PART 1 - GENERAL

1.1 RELATED DOCUMENTS

A. Drawings and general provisions of the Contract, including General and Supplementary Conditions and other Division 1 Specification Sections, apply to this Section.

1.2 SUMMARY

A. This section includes administrative and procedural requirements governing allowances. Selected materials and equipment are specified in the Contract Documents by allowances. In some cases, these allowances include installation. Allowances have been established in lieu of additional requirements and to defer selection of actual materials and equipment to a later date when additional information is available for evaluation. If necessary, additional requirements will be issued by Change order.

PART 2 - PRODUCTS (Not Applicable)

PART 3 - EXECUTION

3.1 EXAMINATION

A. Examine products covered by an allowance promptly upon delivery for damage or defects.

3.2 PREPARATION

A. Coordinate materials and their installation for each allowance with relative materials and installations to ensure that each allowance item is completely integrated and interfaced with related work.

3.3 SCHEDULE OF ALLOWANCES

A. Types of allowances include the following:

1. Allowance No. 1: Include in the base bid the cost to remove 500 SF of damaged or deteriorating, gypsum fill, poured gypsum roof deck and GWB centering and replacement with metal roof deck, polyisocyanurate insulation, perlite cover board and two-ply modified bitumen roof system shown on the drawings and noted on the Contract Drawings. If this allowance is not used, or only used in part, the Owner will be reimbursed by way of a credit change order based on the price bid for this work in the unit price section of the Contractor's bid.

2. Allowance No. 2: Include in the Base Bid the cost of preparing 500 SF of existing block walls for painting and apply one coat of paint as specified for coating previously painted block walls. If this allowance is not used, or only used in part, the Owner will be reimbursed by way of a credit change order based on the price bid for this work in the unit price section of the Contractor's bid.

3. Allowance No. 3: Include in the Base Bid the cost of removing 500 square feet of existing suspended acoustical ceiling panel in excess of those shown on the Construction Documents and as determined by the Owner's Representative and replacing them with new. If this allowance is not used, or only used in part, the Owner will be reimbursed by way of a credit change order based on the price bid for this work in the unit price section of the Contractor's bid.

4. Allowance No. 4: Include in the Base Bid the cost of providing fire safing/sealing of 50 previously unidentified openings in the 8-inch thick CMU corridor walls to ensure compliance with the one-hour fire-resistance requirement of these walls. Assume each opening to be safed is two inches square or diameter. Larger openings will be priced on multiples of the assumed size. If the quantity of these openings exceeds the 50 safes in Allowance No. 4 and other safing and sealing identified in the Contract Documents, the Contractor will be compensated using the unit price bid for this work.

END OF SECTION 012100

SECTION 012200 - UNIT PRICES

PART 1 - GENERAL

1.1 RELATED DOCUMENTS

A. Drawings and general provisions of the Contract, including General and Supplementary Conditions and other Division-1 Specification Sections, apply to this Section.

1.2 SUMMARY

A. This Section specifies administrative and procedural requirements for unit prices.

B. A unit price is an amount proposed by Bidders and stated on the Bid Form as a price per unit of measurement for materials or services that will be added to or deducted from the Contract Sum by Change Order in the event the estimated quantities of Work required by the Contract Documents are increased or decreased.

C. Unit prices include all necessary material, overhead, profit and applicable taxes.

D. The Owner reserves the right to reject the Contractor's measurement of work-in-place that involves use of established unit prices, and to have this Work measured by an independent surveyor acceptable to the Contractor at the Owner's expense.

E. **Contractor shall not proceed with work listed herein that will incur charges beyond what is included in the Original Contract Price of this job without specific authorization by the Owner, or such method approval as he shall deem acceptable.**

F. Schedule: A "Unit Price Schedule" is included below. Specification Sections referenced in the Schedule contain requirements for materials and methods described under each unit price.

PART 2 - PRODUCTS (Not Applicable).

PART 3 - EXECUTION

3.1 UNIT PRICE SCHEDULE

A. Item No. 1 – Remove and Replace Damaged and/or Deteriorating Roof Deck – Materials and Labor per Square Foot of Deck.

1. Description: Remove 500 SF of damaged or deteriorating gypsum fill, poured gypsum roof deck and GWB centering and replacement with metal roof deck and polyisocyanurate insulation, tapered to match adjacent gypsum deck surface, as shown on the Contract Documents. This quantity is in excess of the Contract requirement and 500 SF allowance and will be as determined by the Owner's Representative.

   a. Unit of Measurement: Square foot of deck and gypsum fill removal and replacement.

B. Item No 2 - One Coat of Paint On Previously Painted Block: Labor and Material

1. Description: Prepare existing block wall for painting and apply one coat of the paint specified for coating previously painted block walls. This quantity is in excess of the Contract requirement and 500 SF allowance and will be as determined by the Owner's Representative.

   a. Unit of Measure: SF of painted block wall in excess of the Contract requirement and the 500 SF allowance.

C. Item No. 3 – Suspended Acoustical Ceiling Panel Replacement: Labor and Material

1. Description: Immediately following the Pre-Construction meeting the Owner's Representative, the Architect and the Contractor shall survey the ceiling tiles to remain and determine those that are damaged beyond useful life and or are of unacceptable appearance. If this quantity is in excess of the Contract requirements and the 500 square foot allowance, the Contractor will be compensated using the unit price bid for this work.

   a. Unit of Measure: Square feet of ceiling tiles replaced in excess of the Contract requirements and the 500 square foot allowance.

D. Item No. 4- Fire Safing/Sealing Openings in Masonry Corridor Walls:

1. Description: Provide fire safing/sealing of previously unidentified openings in the corridor walls to ensure compliance with the one hour fire resistance requirement of these walls. Assume each opening to be safed is two inches square or diameter. Larger openings will be priced on multiples of the assumed size. If he quantity of these openings exceeds the 50 safes in Allowance No. 4 and other safing and sealing identified in the Contract Documents, the Contractor will be compensated using the unit price bid for this work.

   a. Unit of Measure: Each 2 inch square or diameter of safing/sealing.

END OF SECTION 012200

SECTION 012300 - ALTERNATES

PART 1 - GENERAL

1.1 RELATED DOCUMENTS

A. Drawings and general provisions of the Contract, including General and Supplementary Conditions and other Division 01 Specification Sections, apply to this Section.

1.2 SUMMARY

A. This Section includes administrative and procedural requirements for alternates.

1.3 DEFINITIONS

A. Alternate: An amount proposed by bidders and stated on the Bid Form for certain work defined in the Bidding Requirements that may be added to the Base Bid amount if Owner decides to accept a corresponding change either in the amount of construction to be completed or in the products, materials, equipment, systems, or installation methods described in the Contract Documents.

1. The cost or credit for each alternate is the net addition to the Contract Sum to incorporate alternate into the Work. No other adjustments are made to the Contract Sum.

1.4 PROCEDURES

A. Coordination: Modify or adjust affected adjacent work as necessary to completely integrate work of the alternate into Project.

1. Include as part of each alternate, miscellaneous devices, accessory objects, and similar items incidental to or required for a complete installation whether or not indicated as part of alternate.

B. Notification: Immediately following award of the Contract, notify each party involved, in writing, of the status of each alternate. Indicate if alternates have been accepted, rejected, or deferred for later consideration. Include a complete description of negotiated modifications to alternates.

C. Execute accepted alternates under the same conditions as other work of the Contract.

D. Schedule: A Schedule of Alternates is included at the end of this Section. Specification Sections referenced in schedule contain requirements for materials necessary to achieve the work described under each alternate.

E. Exact Limits of Alternate Work: The prescribed limits and defining features of work related to the Base Bid and Alternates is described on the drawings.

F. Special Stipulation for Alternate Work Phased by Summer of Completion: Note that, under Alternate #2, for any existing HVAC systems that remain in place until Summer of 2015, i.e., at the Kitchen and Cafeteria, then pricing of the work shall include leaving any existing necessary controls such as chiller, boiler, ductwork, piping, pumps diffusers, electrical power thereto, and related components in place for such systems to continue in operation until their replacement in Summer 2015.

PART 2 - PRODUCTS (Not Used)

PART 3 - EXECUTION

3.1 SCHEDULE OF ALTERNATES

A. Alternate No. 1 - Complete all work designed, specified and detailed located in the Kitchen/Service portion of Area 'C' (Roofing and HVAC), and Area 'D2' (Cafeteria HVAC only) of the building as delineated on the drawings. Alternate work shall also include replacement of the refrigeration system at Kitchen walk-in coolers. **Under Alternate #1, this work shall be performed concurrently with Base Bid work, to commence on June 16, 2014 and achieve substantial completion, ready for the Owner's occupancy and use, not later than August 15, 2014.** Final completion will be accomplished no later than 30 days after the date established for substantial completion.

B. Alternate No. 2 - Complete all work designed, specified and detailed located in the Kitchen/Service portion of Area 'C' (Roofing and HVAC), and Area 'D2' (Cafeteria HVAC only) of the building as delineated on the drawings. Alternate work shall also include replacement of the refrigeration system at Kitchen walk-in coolers. **Under Alternate #2, this work shall be performed during the following summer, to commence on June 15, 2015 and achieve substantial completion, ready for the Owner's occupancy and use, not later than August 14, 2015.** Final completion will be accomplished no later than 30 days after the date established for substantial completion.

END OF SECTION 012300

SECTION 012500 - SUBSTITUTION PROCEDURES

PART 1 - GENERAL

1.1 RELATED DOCUMENTS

A. Drawings and general provisions of the Contract, including General and Supplementary Conditions and other Division 01 Specification Sections, apply to this Section.

1.2 SUMMARY

A. Section includes administrative and procedural requirements for substitutions.

B. Related Requirements:

1. Section 012100 "Allowances" for products selected under an allowance.
2. Section 012300 "Alternates" for products selected under an alternate.
3. Section 016000 "Product Requirements" for requirements for submitting comparable product submittals for products by listed manufacturers.

1.3 DEFINITIONS

A. Substitutions: Changes in products, materials, equipment, and methods of construction from those required by the Contract Documents and proposed by Contractor.

1. Substitutions for Cause: Changes proposed by Contractor that are required due to changed Project conditions, such as unavailability of product, regulatory changes, or unavailability of required warranty terms.
2. Substitutions for Convenience: Changes proposed by Contractor or Owner that are not required in order to meet other Project requirements but may offer advantage to Contractor or Owner.

1.4 ACTION SUBMITTALS

A. Substitution Requests: Submit three copies of each request for consideration. Identify product or fabrication or installation method to be replaced. Include Specification Section number and title and Drawing numbers and titles.

1. Substitution Request Form: Use CSI Form 13.1A or suitable form of submittal transmittal with substitution request clearly identified and justified.

2. Documentation: Show compliance with requirements for substitutions and the following, as applicable:

   a. Statement indicating why specified product or fabrication or installation cannot be provided, if applicable.
   b. Coordination information, including a list of changes or revisions needed to other parts of the Work and to construction performed by Owner and separate contractors, that will be necessary to accommodate proposed substitution.
   c. Detailed comparison of significant qualities of proposed substitution with those of the Work specified. Include annotated copy of applicable Specification Section. Significant qualities may include attributes such as performance, weight, size, durability, visual effect, sustainable design characteristics, warranties, and specific features and requirements indicated. Indicate deviations, if any, from the Work specified.
   d. Product Data, including drawings and descriptions of products and fabrication and installation procedures.
   e. Samples, where applicable or requested.
   f. Certificates and qualification data, where applicable or requested.
   g. List of similar installations for completed projects with project names and addresses and names and addresses of architects and owners.
   h. Material test reports from a qualified testing agency indicating and interpreting test results for compliance with requirements indicated.
   i. Research reports evidencing compliance with building code in effect for Project, from ICC-ES or other code entity such as ASHRAE, IESNA, etc.
   j. Detailed comparison of Contractor's construction schedule using proposed substitution with products specified for the Work, including effect on the overall Contract Time. If specified product or method of construction cannot be provided within the Contract Time, include letter from manufacturer, on manufacturer's letterhead, stating date of receipt of purchase order, lack of availability, or delays in delivery.
   k. Cost information, including a proposal of change, if any, in the Contract Sum.
   l. Contractor's certification that proposed substitution complies with requirements in the Contract Documents except as indicated in substitution request, is compatible with related materials, and is appropriate for applications indicated.
   m. Contractor's waiver of rights to additional payment or time that may subsequently become necessary because of failure of proposed substitution to produce indicated results.

3. Architect's Action: If necessary, Architect will request additional information or documentation for evaluation within seven days of receipt of a request for substitution. Architect will notify Contractor of acceptance or rejection of proposed substitution within 15 days of receipt of request, or seven days of receipt of additional information or documentation, whichever is later.

a. Forms of Acceptance: Change Order, Construction Change Directive, or Architect's Supplemental Instructions for minor changes in the Work.
b. Use product specified if Architect does not issue a decision on use of a proposed substitution within time allocated.

1.5 QUALITY ASSURANCE

A. Compatibility of Substitutions: Investigate and document compatibility of proposed substitution with related products and materials. Engage a qualified testing agency to perform compatibility tests recommended by manufacturers.

1.6 PROCEDURES

A. Coordination: Revise or adjust affected work as necessary to integrate work of the approved substitutions.

PART 2 - PRODUCTS

2.1 SUBSTITUTIONS

A. Substitutions for Cause: Submit requests for substitution immediately on discovery of need for change, but not later than 15 days prior to time required for preparation and review of related submittals.

1. Conditions: Architect will consider Contractor's request for substitution when the following conditions are satisfied. If the following conditions are not satisfied, Architect will return requests without action, except to record noncompliance with these requirements:

a. Requested substitution is consistent with the Contract Documents and will produce indicated results.
b. Requested substitution provides sustainable design characteristics that specified product provided.
c. Substitution request is fully documented and properly submitted.
d. Requested substitution will not adversely affect Contractor's construction schedule.
e. Requested substitution has received necessary approvals of authorities having jurisdiction.
f. Requested substitution is compatible with other portions of the Work.
g. Requested substitution has been coordinated with other portions of the Work.
h. Requested substitution provides specified warranty.

i. If requested substitution involves more than one contractor, requested substitution has been coordinated with other portions of the Work, is uniform and consistent, is compatible with other products, and is acceptable to all contractors involved.

B. Substitutions for Convenience: Architect will consider requests for substitution if received within 60 days after the Notice to Proceed. Requests received after that time may be considered or rejected at discretion of Architect.

1. Conditions: Architect will consider Contractor's request for substitution when the following conditions are satisfied. If the following conditions are not satisfied, Architect will return requests without action, except to record noncompliance with these requirements:

a. Requested substitution offers Owner a substantial advantage in cost, time, energy conservation, or other considerations, after deducting additional responsibilities Owner must assume. Owner's additional responsibilities may include compensation to Architect for redesign and evaluation services, increased cost of other construction by Owner, and similar considerations.
b. Requested substitution does not require extensive revisions to the Contract Documents.
c. Requested substitution is consistent with the Contract Documents and will produce indicated results.
d. Requested substitution provides sustainable design characteristics that specified product provided.
e. Substitution request is fully documented and properly submitted.
f. Requested substitution will not adversely affect Contractor's construction schedule.
g. Requested substitution has received necessary approvals of authorities having jurisdiction.
h. Requested substitution is compatible with other portions of the Work.
i. Requested substitution has been coordinated with other portions of the Work.
j. Requested substitution provides specified warranty.
k. If requested substitution involves more than one contractor, requested substitution has been coordinated with other portions of the Work, is uniform and consistent, is compatible with other products, and is acceptable to all contractors involved.

PART 3 - EXECUTION (Not Used)

END OF SECTION 012500

SECTION 012600 - CONTRACT MODIFICATION PROCEDURES

PART 1 - GENERAL

1.1 RELATED DOCUMENTS

A. Drawings and general provisions of the Contract, including General and Supplementary Conditions and other Division 01 Specification Sections, apply to this Section.

1.2 SUMMARY

A. This Section specifies administrative and procedural requirements for handling and processing Contract modifications.

B. Related Sections include the following:

1. Division 01 Section "Allowances" for procedural requirements for handling and processing allowances.
2. Division 01 Section "Unit Prices" for administrative requirements for using unit prices.

1.3 MINOR CHANGES IN THE WORK

A. Architect will issue supplemental instructions authorizing Minor Changes in the Work, not involving adjustment to the Contract Sum or the Contract Time, on AIA Document G710, "Architect's Supplemental Instructions."

1.4 PROPOSAL REQUESTS

A. Owner-Initiated Proposal Requests: Architect will issue a detailed description of proposed changes in the Work that may require adjustment to the Contract Sum or the Contract Time. If necessary, the description will include supplemental or revised Drawings and Specifications.

1. Proposal Requests issued by Architect are for information only. Do not consider them instructions either to stop work in progress or to execute the proposed change.
2. Within 14 days after receipt of Proposal Request, submit a quotation estimating cost adjustments to the Contract Sum and the Contract Time necessary to execute the change.

a. Include a list of quantities of products required or eliminated and unit costs, with total amount of purchases and credits to be made. If requested, furnish survey data to substantiate quantities.
b. Indicate applicable taxes, delivery charges, equipment rental, and amounts of trade discounts.
c. Include costs of labor and supervision directly attributable to the change.
d. Include an updated Contractor's Construction Schedule that indicates the effect of the change, including, but not limited to, changes in activity duration, start and finish times, and activity relationship. Use available total float before requesting an extension of the Contract Time.

B. Contractor-Initiated Proposals: If latent or unforeseen conditions require modifications to the Contract, Contractor may propose changes by submitting a request for a change to Architect.

1. Include a statement outlining reasons for the change and the effect of the change on the Work. Provide a complete description of the proposed change. Indicate the effect of the proposed change on the Contract Sum and the Contract Time.
2. Include a list of quantities of products required or eliminated and unit costs, with total amount of purchases and credits to be made. If requested, furnish survey data to substantiate quantities.
3. Indicate applicable taxes, delivery charges, equipment rental, and amounts of trade discounts.
4. Include costs of labor and supervision directly attributable to the change.
5. Include an updated Contractor's Construction Schedule that indicates the effect of the change, including, but not limited to, changes in activity duration, start and finish times, and activity relationship. Use available total float before requesting an extension of the Contract Time.
6. Comply with requirements in Division 01 Section "Product Requirements" if the proposed change requires substitution of one product or system for product or system specified.

C. Proposal Request Form: Use AIA Document G709 for Proposal Requests.

1.5 ALLOWANCES

A. Allowance Adjustment: To adjust allowance amounts, base each Change Order proposal on the difference between purchase amount and the allowance, multiplied by final measurement of work-in-place. If applicable, include reasonable allowances for cutting losses, tolerances, mixing wastes, normal product imperfections, and similar margins.

1. Include installation costs in purchase amount only where indicated as part of the allowance.

2. If requested, prepare explanation and documentation to substantiate distribution of overhead costs and other margins claimed.
3. Submit substantiation of a change in scope of work, if any, claimed in Change Orders related to unit-cost allowances.
4. Owner reserves the right to establish the quantity of work-in-place by independent quantity survey, measure, or count.

B. Submit claims for increased costs because of a change in scope or nature of the allowance described in the Contract Documents, whether for the Purchase Order amount or Contractor's handling, labor, installation, overhead, and profit. Submit claims within 21 days of receipt of the Change Order or Construction Change Directive authorizing work to proceed. Owner will reject claims submitted later than 21 days after such authorization.

1.6 CHANGE ORDER PROCEDURES

A. On Owner's approval of a Proposal Request, Architect will issue a Change Order for signatures of Owner and Contractor on AIA Document G701.

PART 2 - PRODUCTS (Not Used)

PART 3 - EXECUTION (Not Used)

END OF SECTION 012600

THIS PAGE LEFT INTENTIONALLY BLANK

SECTION 012900 - APPLICATIONS FOR PAYMENT

PART 1 - GENERAL

1.1 RELATED DOCUMENTS

A. Drawings and general provisions of Contract, including General and Supplementary Conditions and other Division-1 Specification Sections, apply to this Section.

1.2 SUMMARY

A This Section specifies administrative and procedural requirements governing the Contractor's Applications for Payment.

1.3 SCHEDULE OF VALUES

A. Contractor must coordinate preparation of the Schedule of Values with preparation of the Contractor's Construction Schedule.

B. Each Sub-Contractor shall coordinate preparation of this Schedule of Values for its part of the Work with preparation of the General Contractors' Construction Schedule and Schedule of Values.

C. Correlate line items in the Schedule of Values with other required administrative schedules and forms, including:

1. Contractor's construction schedule.
2. Application for Payment form.
3. List of subcontractors.

D. Submit the Schedule of Values to the Architect at the earliest feasible date, but in no case later than 14 days before the date scheduled for submittal of the initial Application for Payment.

E. Format and Content: The project Schedule of Values shall include but is not limited to the following line items; Provide separate lines for labor and material values for items w/ a asterisk before them:

1. <u>Division 1</u>
   a. Superintendent
   b. Bond
   c. Insurances
   d. Equipment
   e. Dumpster
   f. Utilities
   g. Temporary Facilities

2. Division 2
   a. Interior Demolition
   b. Roof Demolition
   c. Stage Curtain Demounting and Cleaning
   d. Dry Wells

3. Division 4
   a. *Grouting & Masonry Reinforcing

4. Division 5
   a. *Metal Roof Deck
   b. *Roof Joist Reinforcing
   c. *Roof Top Equipment Platforms
   d. *Miscellaneous Fabrications

5. Division 6
   a. *Sheathing and Building Wrap
   b. *Roof Blocking
   c. *Countertops & Splashes

6. Division 7
   a. *Two-ply Modified Bitumen Roof
   b. *Roof Insulation
   c. *Batt Wall Insulation
   d. *Foam Wall Insulation
   e. *Flashing & Sheet Metal
   f. * Roof Accessories
   g. *Sealants

7. Division 8
   a. *HM Doors
   b. *HM Door Frames
   c. *Door Hardware

8. Division 9
   a. *Interior Metal Stud Framing
   b. *GWB
   c. * Wall Base
   d. *VCT
   e. *Acoustical Panel Ceilings
   f. Acoustical Wall Panels
   g. * Painting

10 Division 15 Mechanical
- a. HVAC Demolition
- b. *HVAC Ductwork
- c. *HVAC Insulation
- d. *VRF Indoor Units
- e. *VRF Outdoor Units
- f. City-Multi unit Factory Start-up
- g. *VRF Branch Controllers
- h. *Refrigerant Piping
- i. *Hangers and Supports
- j. Rooftop Units
- k. *Make up Air Unit
- l. Exhaust Fans
- m. *Electric Unit Heaters
- n. *Gas Fired Boiler
- o. *HVAC Diffusers and Grilles
- p. *HVAC Hoods and Curbs
- q. *Gas Piping
- r. *Fire Dampers
- s. *Electric Duct Heater
- t. *Condensation Drain Piping
- u. *Hot Water Piping
- v. *Expansion Tank
- w. *Air Separator
- x. *Kitchen Hood Plenum
- y. *Automatic Temperature Controls
- z. *Testing and Balancing (TABS)

11. Division 16
- a. Electrical Demolition
- b. *Lighting fixture cleaning relamping.
- c. *Electrical Rough-in for indoor mechanical equipment
- d. *Electrical Rough-in for outdoor mechanical equipment
- f. *Electrical Rough-in for Boiler Room mechanical equipment
- g. *Reinstallation of existing lighting fixtures and installation of new lighting fixtures
- h. *Electrical Panel and miscellaneous new circuit breakers

*Provide separate material and labor values.

F. If Alternate #1 is accepted provide a separate schedule of values for that work. Use the base bid Schedule of Values line item list as appropriate for the line items in the Alternate SOV.

1.4 Identification:

A. Include the following Project identification on the Schedule of Values:

1. Project name and location.
2. Name of the Architect.
3. Project number.
4. Contractor's name and address.
5. Date of submittal.

B. **Round amounts off to the nearest whole dollar; the total shall equal the Contract Sum**.

C. Schedule Updating: Update and resubmit the Schedule of Values when Change Orders or Construction Change Directives result in a change in the Contract Sum.

1.5 APPLICATIONS FOR PAYMENT:

A. Each Application for Payment shall be consistent with previous applications and payments as certified by the Architect and paid for by the Owner.

B. The initial Application for Payment, the Application for Payment at time of Substantial Completion, and the final Application for Payment involve additional requirements.

C. Payment Application Times: Each Application for Payment shall be submitted by the first day of each month. The period of construction Work covered by each Application for Payment is the period from the first to the last day of each month for the duration of the construction period.

D. Payment Application Forms: Use AIA Document G 702 and Continuation Sheets G 703 as the form for Application for Payment.

E. Application Preparation: Complete every entry on the form, including notarization and execution by person authorized to sign legal documents on behalf of the Owner. Incomplete applications will be returned without action.

F. Entries shall match data on the Schedule of Values and Contractor's Construction Schedule. Use updated schedules if revisions have been made.

G. Include amounts of Change Orders and Construction Change Directives issued prior to the last day of the construction period covered by the application.

H. Transmittal: Submit 4 executed copies of each Application for Payment to the Architect by means ensuring receipt within 24 hours; one copy shall be complete, including waivers of lien and similar attachments.

I. Transmit each copy with a transmittal form listing attachments, and recording appropriate information related to the application in a manner acceptable to the Architect.

J. Waiver Delays: Submit each Application for Payment with the Contractor's waiver of mechanics lien for the period of construction covered by the application.

K. Submit final Application for Payment with or preceded by final waivers from every entity involved with performance of Work covered by the application who could lawfully be entitled to a lien.

L. Waiver Forms: Submit waivers of lien on forms, and executed in a manner, acceptable to Owner.

M. Initial Application for Payment: Administrative actions and submittals that must precede submittal of the first Application for Payment include the following:

1. List of subcontractors.
2. List of principal suppliers and fabricators.
3. Schedule of Values.
4. Contractor's Construction Schedule (preliminary if not final).
5. Copies of building permits

N. Application for Payment at Substantial Completion: Following issuance of the Certificate of Substantial Completion, submit an Application for Payment; this application shall reflect any Certificates of Partial Substantial Completion issued previously for Owner occupancy of designated portions of the Work.

O. Administrative actions and submittals that shall **precede** this application include:

1. Occupancy permits and similar approvals.
2. Final cleaning.
3. Application for reduction of retainage, and consent of surety.
4. Advice on shifting insurance coverage.
5. List of incomplete Work, recognized as exceptions to Architect's Certificate of Substantial Completion.
6. All warranties and guarantees.

P. Final Payment Application: Administrative actions and submittals which must precede or coincide with submittal of the final payment Application for Payment include the following:

1. Completion of Project closeout requirements.
2. Completion of items specified for completion after Substantial Completion.
3. Assurance that unsettled claims will be settled.
4. Assurance that Work not complete and accepted will be completed without

undue delay.

5. Transmittal of required Project construction records to Owner.
6. Proof that taxes, fees and similar obligations have been paid.
7. Removal of temporary facilities and services.
8. Removal of surplus materials, rubbish and similar elements.

PART 2 PRODUCTS (Not Applicable)

PART 3 EXECUTION (Not Applicable)

END OF SECTION 012900

SECTION 013100 - PROJECT MEETINGS

PART 1 - GENERAL

1.1 RELATED DOCUMENTS

A. Drawings and general provisions of the Contract, including General and supplementary Conditions and other Division-1 Specification Sections, apply to this Section.

1.2 SUMMARY

A. This Section specifies administrative and procedural requirements for project meetings including:

1. Pre-Construction Meeting.
2. Progress Meeting(s)
3. Roofing Manufacturer's Pull-out Test Meeting
4. Final Inspection Meeting

B. Construction schedules are specified in Section 01300 - "Submittals"

C. Pre-construction Conference An organizational meeting will be held at the Project site prior to commencement of construction activities to clarify responsibilities and procedures as outlined below.

D. Agenda: Topics will include items of significance that could affect progress of the job, such as:

1. Contractor's schedule and work plan including staffing.
2. Estimated time of completion and critical path items.
3. Deliveries, site access, and storage of materials.
4. Off-site fabrication issues.
5. Site Utilization, Temporary Facilities.
6. Hours of Work and Job Safety.
7. Hazards and risks.
8. Quality, Work standards and cleanup.
9. Handling of deck replacement-quantification and approval.
10. Change Orders and RFP procedures.
11. Documentation for (and handling of) payment requests.
12. Responsibility and Authority of Field Representatives
13. Distribution of phone names and numbers of all present
14. Substantial Completion, Rain Days, Liquidated Damages

E. Attendees: The Owner, the Architect, the Contractor and his superintendent, and a representative of the Roofing Manufacturer shall each be at the conference.

1.3 PROGRESS MEETINGS

A. Progress meetings will be held at the Project Site **twice a month** for the purpose of reviewing job progress.

1. Attendees: The Architect, the Contractor and his superintendent, and any subcontractor or supplier whose performance will have an impact on the quality or timeliness of job completion will be present at this meeting. The Subcontractor's representative at these meetings shall be familiar with the project and authorized to make decisions on matters relating to job progress.

2. Agenda: Review progress since the last meeting. Determine where each activity is in relation to the Contractor's Construction Schedule: whether on time or ahead or behind schedule. Determine how construction behind schedule will be expedited; secure commitments from parties involved to do so. Discuss whether schedule revisions or overtime work will be required to ensure that current and subsequent activities will be completed within the Contract Time.

3. Review the present and future needs of each entity present, including such items as:

a. Time and Sequences
b. Deliveries and critical path items
c. Off-site fabrication issues
d. Access
e. Temporary facilities and services
f. Hours of Work
g. Hazards and risks
h. Quality, Work standards and cleanup
i. Change Orders and unit price work done to date
j. Documentation of information for payment requests

B. Schedule Updating: Revise the construction schedule once a month after the mid-month progress meeting where revisions to the schedule have been made or recognized. Issue the revised schedule every month.

C. Roofing Manufacturer's Pull-out Test Meeting: A roofing manufacturer's pull-out test meeting will be held at the project site prior to the beginning of construction. The tests to be performed at the meeting will verify the suitability of the existing roof decks for securing the roof systems according to the specified standards at all

roofs as required by the roofing manufacturer to provide the required warranty coverage.

1. Attendees: The Owner, the Architect, the Contractor and a representative of the roofing manufacturer.
2. Agenda:
   a. Discussion of the results required to meet specified standards and warranty criteria.
   b. Pull-out tests conducted by the roofing manufacturer's representative.
   c. Review of the results and discussion of installation procedures for compliance with standards and warranty.
   d. Discussion of procedures for pull-out tests on decks to be installed during construction.

D. Final Inspection Meeting: After the work is complete, there shall be a final meeting at the project site to examine the roof, verify all work is complete and all requirements are met for issuing contractor and manufacturer's warranties to the Owner.
   1. Attendees: The Owner, the Architect, the Contractor and his superintendent, and a representative of the roofing manufacturer shall be at the meeting.

PART 1 - PRODUCTS (Not Applicable)

PART 2 - EXECUTION (Not Applicable)

END OF SECTION 013100

THIS PAGE LEFT INTENTIONALLY BLANK

SECTION 013300 - SUBMITTALS

PART 1 - GENERAL

1.1 RELATED DOCUMENTS

A. Drawings and general provisions of Contract, including General and Supplementary Conditions and other Division-1 Specification Sections, apply to this Section.

1.2 SUMMARY

A. This Section specifies administrative and procedural requirements for submittals required for performance of the Work, including:

1. Submittal Schedule
2. Contractor's construction schedule
3. Shop Drawings
4. Product Data
5. Samples
6. Schedule of Values

1.3 Administrative Submittals: Refer to other Division-1 Sections and other Contract Documents for requirements for administrative submittals.

1.4 SUBMITTAL SCHEDULE

A. The Contractor shall prepare a complete schedule of submittals. Submit the schedule within 10 days of the date required for establishment of the Contractor's construction schedule.

1. Coordinate submittal schedule with the list of subcontracts, schedule of values and the list of products as well as the Contractor's construction schedule.

2. Prepare the schedule in Specification Division order using the schedule shown at the end of this section as a template. Provide the following information for each submittal:

a. Submittal reference number for each item.
b. Review Status
c. Name of subcontractor.
d. Description of the part of the Work covered.

3. Scheduled date for resubmittal.

1.5 SUBMITTAL PROCEDURES

A. Coordination: Coordinate preparation and processing of submittals with performance of construction activities. **Transmit each submittal sufficiently in advance of performance of related construction activities to avoid delay**.

B. The Architect reserves the right to withhold action on a submittal requiring coordination with other submittals until related submittals are received.

C. Processing: Allow sufficient review time so that installation will not be delayed as a result of the time required to process submittals, including time for resubmittals.

D. Allow two weeks for initial review. If possible, review will be done more quickly. Allow additional time if processing must be delayed to permit coordination with subsequent submittals. The Architect will promptly advise the Contractor when a submittal being processed must be delayed for coordination. No extension of Contract Time will be authorized because of failure to transmit submittals to the Architect sufficiently in advance of the Work to permit processing.

E. Submittal Preparation: Place a permanent label, title block or cover sheet on each submittal for identification. Indicate the name of the entity that prepared each submittal.

1. Provide a space approximately 4" x 5" on the label, title block or cover sheet on Submittal to record the Architect's review and approval markings and the action taken. Include the following information on the label, title block or cover sheet, for processing and recording action taken.

   a. Project name and date
   b. Name and address of Contractor and Supplier
   c. Number and title of appropriate Specification Section
   d. Drawing number and detail references, as appropriate

F. Submittal Transmittal: Package each submittal appropriately for transmittal and handling. Transmit each submittal from Contractor to Architect using a transmittal form. Submittals received from sources other than the contractor will be returned without action.

1. On the transmittal, record relevant information and requests for data including submittal number and description (Note: Description should include whether it is product data or a shop drawing and what material it relates to, i.e. paint, roofing, sheet metal, etc.). On the form, or separate sheet, record deviations from Contract Document requirements, including minor variations and limitations. **Include Contractor's certification that information complies with Contract Document requirements. If submittal comes without this certification, it will be returned without review.**

G. Transmittal Form: Use AIA Document G810 or an approved equal.

1.6 CONTRACTOR'S CONSTRUCTION SCHEDULE

A. Submission before the Pre-Construction Meeting: Prepare a simple horizontal bar-chart type Contractor's construction schedule. Submit **before** the preconstruction conference.

1. Provide a separate time bar for each significant construction activity. Provide continuous vertical line to identify the first working day of each week.

2. Prepare the schedule on a sheet, of sufficient width to show data for the entire construction period.

3. Show each activity in proper sequence, and highlight critical path items.

4. Plan for completion in advance of the date established for Substantial Completion. Indicate Substantial Completion on the schedule to allow time for the Architect's procedures necessary for certification of Substantial Completion.

B. Schedule Updating: Revise the schedule after the progress meeting or at times where revisions have been recognized or made. Issue the updated schedule concurrently with report of each meeting or when submitting a Request for Payment.

1.7 SHOP DRAWINGS

A. Submit newly prepared information, drawn to accurate scale. Highlight, encircle, or otherwise indicate deviations from the Contract Documents. Do not reproduce Contract Documents or copy standard information as the basis of Shop Drawings. Standard information prepared without specific reference to the Project is not considered Shop Drawings.

B. Shop Drawings include fabrication and installation drawings, schedules, and similar drawings. Include the following information:

1. Dimensions
2. Identification of products and materials included
3. Compliance with specified standards
4. Notation of coordination requirements
5. Notation of dimensions established by field measurement

C. Sheet size: Submit Shop Drawings on sheets at least 8-1/2" x 11" but no larger

than 24" x 36".

D. Submittal: Submit seven copies of all shop drawings for review. For shop drawings submitted in format larger than 8-1/2x11, submit one reproducible copy and three prints. The Architect will retain two, and will return the others marked with action taken and corrections or modifications required. (One of these two copies shall be marked up and maintained as a Record Document in the Architect's file. The remaining copy will be distributed to the Owner upon Project Closeout.) One copy of the submittal is forwarded to the Owner with action taken and the remaining copies are forwarded to the Contractor. See Section 01700, "Project Closeout" for additional information on Record Document requirements.

E. Do not use Shop Drawings for construction unless they have been reviewed and approved by the Architect.

1.8 PRODUCT DATA

A. Collect Product Data into a single submittal for each element of construction or system. Product Data includes printed information such as manufacturer's installation instructions, catalog cuts, standard color charts, etc. Where Product Data must be specially prepared because standard printed data is not suitable for use, submit as "Shop Drawings".

B. Mark each copy to show applicable choices and options. Where printed Product Data includes information on several products, some of which are not required, mark copies to indicate the applicable information. Include the following information:

1. Submittal number
2. Specification division
3. Manufacturer's printed recommendations
4. Compliance with recognized trade association standards
5. Compliance with recognized testing agency standards
6. Application of testing agency labels and seals
7. Notation of dimensions verified by field measurement

C. Do not submit Product Data until compliance with requirements of the contract Documents has been confirmed. Stamp and sign data after reviewing it for compliance to indicate that such a review has been made and that the data does indeed comply with the specified requirements.

D. Submittals: Submit 7 copies of each required submittal; The Architect will retain two and will return the others marked with action taken and corrections or modifications required.

E. Distribution: Furnish copies of approved submittal to installers, subcontractors, suppliers, manufacturers, fabricators, and others required for performance of construction activities. Show distribution on transmittal forms. Do not proceed with installation until an applicable copy of Product Data is in the installer's possession. Do not permit use of unmarked copies of Product Data in connection with construction.

1.9 SAMPLES

A. Submit full-size, fully fabricated Samples cured and finished as specified and physically identical with the material or product proposed. Samples include partial sections of manufactured or fabricated components, cuts or containers of materials, color range sets, and swatches showing color, texture and pattern. Mount, display, or package Samples in the manner specified to facilitate review of qualities indicated. Prepare Samples to match the Architect's Sample. Include the following:

1. Generic description of the Sample
2. Product name or name of manufacturer
3. Compliance with recognized standards

B. Submit Samples for review of kind, color, pattern and texture, for a final check of these characteristics with other elements, and for a comparison of these characteristics between the final submittal and the actual component as delivered and installed. Refer to other Specification Sections for requirements for Samples that illustrate workmanship, fabrication techniques, details of assembly, connections, operation and similar construction characteristics.

C. Submittals: Except for Samples illustrating assembly details, workmanship, fabrication techniques, connections, submit 4 sets; one will be retained marked with the action taken. Maintain at least one set of Samples, as returned, at the Project site, for quality comparisons throughout the course of construction.

D. Distribution of Samples: Prepare and distribute additional sets to subcontractors, manufacturers, fabricators, suppliers, installers, and others as required for performance of the Work. Show distribution on transmittal forms.

1.10 SCHEDULE OF VALUES

A. Submit a schedule of values along with other product submittals consisting of a tabular breakdown of individual elements of the work in sufficient detail to be able to pay for individual items and see where the costs are. Include the project name and address, Contractor's name and address, Contract Purchase Order number, etc. and show the breakdown of what percentage of the total job cost is in each line item. This breakdown will be used for Applications for Payment. Include administrative items such as bond and supervision, insurance, etc. as applicable.

B. The Schedule of Values must be submitted a minimum of two weeks before the Contractor intends to submit their first application for payment. This is to allow time for the schedule of values to be reviewed and approved by the Owner before the initial invoice. Failure to comply with this requirement will be cause to refuse the application.

C. Application for payment must be based upon the approved schedule of values and submitted on AIA Application for Payment Forms G702 and G703, only. State of Virginia forms will not be accepted.

1.11 ARCHITECT'S ACTION

A. Except for submittals for record, information or similar purposes, where action and return is required or requested, the Architect will review each submittal, mark to indicate action taken, and return promptly. **Compliance with specified characteristics is the Contractor's responsibility.**

B. Action Stamp: The Architect will stamp each submittal with a uniform, self-explanatory action stamp. The stamp will be appropriately marked, as follows, to indicate the action taken:

C. Reviewed: Where submittals are marked "Reviewed" that part of the Work covered by the submittal may proceed provided it complies with requirements of the contract Documents; final acceptance will depend upon that compliance.

D. Comments Attached: When submittals are marked "Comments Attached," that part of the Work covered by the submittal may proceed provided it complies with notations or corrections on the submittal and requirements of the Contract Documents; final acceptance will depend on that compliance. If resubmittal is also required, promptly respond, in order to acknowledge that requested changes will be made.

E. Rejected: When submittal is marked "Rejected" and "Resubmit" do not proceed with that part of the Work covered by the submittal, including purchasing, fabrication, delivery, or other activity. Revise or prepare a new submittal in accordance with the notations; resubmit without delay. Repeat if necessary to obtain a different action mark. Do not permit submittals marked "Rejected" and "Resubmit" to be used at the Project site, or elsewhere where Work is in progress.

F. Confirm: Where a submittal is marked "Confirm" the comment indicates an "approved as noted" status and the Contractor must confirm to the Architect in writing that they will comply with the "as noted" comments before proceeding with that part of the Work.

G. Other Action: Where a submittal is primarily for information or record purposes, special processing or other activity, the submittal will be returned, marked "Reviewed".

PART 2 - PRODUCTS (Not Applicable)

PART 3 - PART 3 - EXECUTION (Not Applicable)

END OF SECTION 013300

THIS PAGE LEFT INTENTIONALLY BLANK

SECTION 014000 - QUALITY REQUIREMENTS

PART 1 - GENERAL

1.1 RELATED DOCUMENTS

A. Drawings and general provisions of the Contract, including General and Supplementary Conditions and other Division 01 Specification Sections, apply to this Section.

1.2 SUMMARY

A. Section includes administrative and procedural requirements for quality assurance and quality control.

B. Testing and inspecting services are required to verify compliance with requirements specified or indicated. These services do not relieve Contractor of responsibility for compliance with the Contract Document requirements.

1. Specific quality-assurance and -control requirements for individual construction activities are specified in the Sections that specify those activities. Requirements in those Sections may also cover production of standard products.
2. Specified tests, inspections, and related actions do not limit Contractor's other quality-assurance and -control procedures that facilitate compliance with the Contract Document requirements.
3. Requirements for Contractor to provide quality-assurance and -control services required by Architect and its consulting engineers, Owner, or authorities having jurisdiction are not limited by provisions of this Section.
4. Specific test and inspection requirements are not specified in this Section.

C. Related Requirements:

1. Section 019100, “Special Inspections" for third-party special inspection testing and inspecting services in accordance with the VUSBC/IBC 2009.

1.3 DEFINITIONS

A. Quality-Assurance Services: Activities, actions, and procedures performed before and during execution of the Work to guard against defects and deficiencies and substantiate that proposed construction will comply with requirements.

B. Quality-Control Services: Tests, inspections, procedures, and related actions during and after execution of the Work to evaluate that actual products incorporated into the Work and completed construction comply with requirements. Services do not include contract enforcement activities performed by Architect.

C. Mockups: Full-size physical assemblies that are constructed on-site. Mockups are constructed to verify selections made under Sample submittals; to demonstrate aesthetic effects and, where indicated, qualities of materials and execution; to review coordination, testing, or operation; to show interface between dissimilar materials; and to demonstrate compliance with specified installation tolerances. Mockups are not Samples. Unless otherwise indicated, approved mockups establish the standard by which the Work will be judged.

1. Laboratory Mockups: Full-size physical assemblies constructed at testing facility to verify performance characteristics.
2. Integrated Exterior Mockups: Mockups of the exterior envelope erected separately from the building but on Project site, consisting of multiple products, assemblies, and subassemblies.
3. Room Mockups: Mockups of typical interior spaces complete with wall, floor, and ceiling finishes, doors, windows, millwork, casework, specialties, furnishings and equipment, and lighting.

D. Preconstruction Testing: Tests and inspections performed specifically for Project before products and materials are incorporated into the Work, to verify performance or compliance with specified criteria.

E. Product Testing: Tests and inspections that are performed by an NRTL, an NVLAP, or a testing agency qualified to conduct product testing and acceptable to authorities having jurisdiction, to establish product performance and compliance with specified requirements.

F. Source Quality-Control Testing: Tests and inspections that are performed at the source, e.g., plant, mill, factory, or shop.

G. Field Quality-Control Testing: Tests and inspections that are performed on-site for installation of the Work and for completed Work.

H. Testing Agency: An entity engaged to perform specific tests, inspections, or both. Testing laboratory shall mean the same as testing agency.

I. Installer/Applicator/Erector: Contractor or another entity engaged by Contractor as an employee, Subcontractor, or Sub-subcontractor, to perform a particular construction operation, including installation, erection, application, and similar operations.

1. Use of trade-specific terminology in referring to a trade or entity does not require that certain construction activities be performed by accredited or

unionized individuals, or that requirements specified apply exclusively to specific trade(s).

J. Experienced: When used with an entity or individual, "experienced" means having successfully completed a minimum of **five** previous projects similar in nature, size, and extent to this Project; being familiar with special requirements indicated; and having complied with requirements of authorities having jurisdiction.

1.4 CONFLICTING REQUIREMENTS

A. Referenced Standards: If compliance with two or more standards is specified and the standards establish different or conflicting requirements for minimum quantities or quality levels, comply with the most stringent requirement. Refer conflicting requirements that are different, but apparently equal, to Architect for a decision before proceeding.

B. Minimum Quantity or Quality Levels: The quantity or quality level shown or specified shall be the minimum provided or performed. The actual installation may comply exactly with the minimum quantity or quality specified, or it may exceed the minimum within reasonable limits. To comply with these requirements, indicated numeric values are minimum or maximum, as appropriate, for the context of requirements. Refer uncertainties to Architect for a decision before proceeding.

1.5 ACTION SUBMITTALS

A. Shop Drawings: For integrated exterior mockups, provide plans, sections, and elevations, indicating materials and size of mockup construction.

1. Indicate manufacturer and model number of individual components.
2. Provide axonometric drawings for conditions difficult to illustrate in two dimensions.

1.6 INFORMATIONAL SUBMITTALS

A. Contractor's Quality-Control Plan: For quality-assurance and quality-control activities and responsibilities.

B. Qualification Data : For Contractor's quality-control personnel.

C. Testing Agency Qualifications: For testing agencies specified in "Quality Assurance" Article to demonstrate their capabilities and experience. Include proof of qualifications in the form of a recent report on the inspection of the testing agency by a recognized authority.

D. Schedule of Tests and Inspections: Prepare in tabular form and include the following:

1. Specification Section number and title.
2. Entity responsible for performing tests and inspections.
3. Description of test and inspection.
4. Identification of applicable standards.
5. Identification of test and inspection methods.
6. Number of tests and inspections required.
7. Time schedule or time span for tests and inspections.
8. Requirements for obtaining samples.
9. Unique characteristics of each quality-control service.

1.7 CONTRACTOR'S QUALITY-CONTROL PLAN

A. Quality-Control Plan, General: Submit quality-control plan within **10** days of **Notice of Award**, and not less than **five** days prior to preconstruction conference. Submit in format acceptable to Architect. Identify personnel, procedures, controls, instructions, tests, records, and forms to be used to carry out Contractor's quality-assurance and quality-control responsibilities. Coordinate with Contractor's construction schedule.

B. Quality-Control Personnel Qualifications: Engage qualified full-time personnel trained and experienced in managing and executing quality-assurance and quality-control procedures similar in nature and extent to those required for Project.

1. Project quality-control manager **may also serve as Project superintendent**.
2. Provide a full-time, qualified roofing inspector during roofing demolition and reinstallation operations, who may also serve as construction manager for all roofing activity. Roof inspector shall be factory-qualified and -approved by the roofing system manufacturer to perform his duties. This qualification shall be furnished to the Owner in writing prior to commencement of any roofing work.
3. Refer to Division 23 and 26 sections for additional factory-representatives and quality control personnel and procedural requirements.

C. Submittal Procedure: Describe procedures for ensuring compliance with requirements through review and management of submittal process. Indicate qualifications of personnel responsible for submittal review.

D. Testing and Inspection: In quality-control plan, include a comprehensive schedule of Work requiring testing or inspection, including the following:

1. Contractor-performed tests and inspections including subcontractor-performed tests and inspections. Include required tests and inspections and Contractor-elected tests and inspections.

2. Special inspections required by authorities having jurisdiction and indicated on the "Statement of Special Inspections."
3. Owner-performed tests and inspections indicated in the Contract Documents.

E. Continuous Inspection of Workmanship: Describe process for continuous inspection during construction to identify and correct deficiencies in workmanship in addition to testing and inspection specified. Indicate types of corrective actions to be required to bring work into compliance with standards of workmanship established by Contract requirements and approved mockups.

F. Monitoring and Documentation: Maintain testing and inspection reports including log of approved and rejected results. Include work Architect has indicated as nonconforming or defective. Indicate corrective actions taken to bring nonconforming work into compliance with requirements. Comply with requirements of authorities having jurisdiction.

1.8 REPORTS AND DOCUMENTS

A. Test and Inspection Reports: Prepare and submit certified written reports specified in other Sections. Include the following:

1. Date of issue.
2. Project title and number.
3. Name, address, and telephone number of testing agency.
4. Dates and locations of samples and tests or inspections.
5. Names of individuals making tests and inspections.
6. Description of the Work and test and inspection method.
7. Identification of product and Specification Section.
8. Complete test or inspection data.
9. Test and inspection results and an interpretation of test results.
10. Record of temperature and weather conditions at time of sample taking and testing and inspecting.
11. Comments or professional opinion on whether tested or inspected Work complies with the Contract Document requirements.
12. Name and signature of laboratory inspector.
13. Recommendations on retesting and reinspecting.

B. Manufacturer's Technical Representative's Field Reports: Prepare written information documenting manufacturer's technical representative's tests and inspections specified in other Sections. Include the following:

1. Name, address, and telephone number of technical representative making report.
2. Statement on condition of substrates and their acceptability for installation of product.
3. Statement that products at Project site comply with requirements.

4. Summary of installation procedures being followed, whether they comply with requirements and, if not, what corrective action was taken.
5. Results of operational and other tests and a statement of whether observed performance complies with requirements.
6. Statement whether conditions, products, and installation will affect warranty.
7. Other required items indicated in individual Specification Sections.

C. Factory-Authorized Service Representative's Reports: Prepare written information documenting manufacturer's factory-authorized service representative's tests and inspections specified in other Sections. Include the following:

1. Name, address, and telephone number of factory-authorized service representative making report.
2. Statement that equipment complies with requirements.
3. Results of operational and other tests and a statement of whether observed performance complies with requirements.
4. Statement whether conditions, products, and installation will affect warranty.
5. Other required items indicated in individual Specification Sections.

D. Permits, Licenses, and Certificates: For Owner's records, submit copies of permits, licenses, certifications, inspection reports, releases, jurisdictional settlements, notices, receipts for fee payments, judgments, correspondence, records, and similar documents, established for compliance with standards and regulations bearing on performance of the Work.

1.9 QUALITY ASSURANCE

A. General: Qualifications paragraphs in this article establish the minimum qualification levels required; individual Specification Sections specify additional requirements.

B. Manufacturer Qualifications: A firm experienced in manufacturing products or systems similar to those indicated for this Project and with a record of successful in-service performance, as well as sufficient production capacity to produce required units.

C. Fabricator Qualifications: A firm experienced in producing products similar to those indicated for this Project and with a record of successful in-service performance, as well as sufficient production capacity to produce required units.

D. Installer Qualifications: A firm or individual experienced in installing, erecting, or assembling work similar in material, design, and extent to that indicated for this Project, whose work has resulted in construction with a record of successful in-service performance.

E. Professional Engineer Qualifications: A professional engineer who is legally qualified to practice in jurisdiction where Project is located and who is experienced in

providing engineering services of the kind indicated. Engineering services are defined as those performed for installations of the system, assembly, or product that are similar in material, design, and extent to those indicated for this Project.

F. Specialists: Certain Specification Sections require that specific construction activities shall be performed by entities who are recognized experts in those operations. Specialists shall satisfy qualification requirements indicated and shall be engaged for the activities indicated.

1. Requirements of authorities having jurisdiction shall supersede requirements for specialists.

G. Testing Agency Qualifications: An NRTL, an NVLAP, or an independent agency with the experience and capability to conduct testing and inspecting indicated, as documented according to **ASTM E 329**; and with additional qualifications specified in individual Sections; and, where required by authorities having jurisdiction, that is acceptable to authorities.

1. NRTL: A nationally recognized testing laboratory according to 29 CFR 1910.7.
2. NVLAP: A testing agency accredited according to NIST's National Voluntary Laboratory Accreditation Program.

H. Manufacturer's Technical Representative Qualifications: An authorized representative of manufacturer who is trained and approved by manufacturer to observe and inspect installation of manufacturer's products that are similar in material, design, and extent to those indicated for this Project.

I. Factory-Authorized Service Representative Qualifications: An authorized representative of manufacturer who is trained and approved by manufacturer to inspect installation of manufacturer's products that are similar in material, design, and extent to those indicated for this Project.

J. Preconstruction Testing: Where testing agency is indicated to perform preconstruction testing for compliance with specified requirements for performance and test methods, comply with the following:

1. Contractor responsibilities include the following:

a. Provide test specimens representative of proposed products and construction.
b. Submit specimens in a timely manner with sufficient time for testing and analyzing results to prevent delaying the Work.
c. Provide sizes and configurations of test assemblies, mockups, and laboratory mockups to adequately demonstrate capability of products to comply with performance requirements.
d. Build site-assembled test assemblies and mockups using installers who will perform same tasks for Project.

e. Build laboratory mockups at testing facility using personnel, products, and methods of construction indicated for the completed Work.
f. When testing is complete, remove test specimens, assemblies, and mockups; do not reuse products on Project except as specifically permitted herein.

2. Testing Agency Responsibilities: Submit a certified written report of each test, inspection, and similar quality-assurance service to Architect, with copy to Contractor. Interpret tests and inspections and state in each report whether tested and inspected work complies with or deviates from the Contract Documents.

K. Mockups: Before installing portions of the Work requiring mockups, build mockups for each form of construction and finish required to comply with the following requirements, using materials indicated for the completed Work:

1. Build mockups in location and of size indicated or, if not indicated, as directed by Architect.
2. Notify Owner's Representative and Architect **seven** days in advance of dates and times when mockups will be constructed.
3. Employ supervisory personnel who will oversee mockup construction. Employ workers that will be employed during the construction at Project.
4. Demonstrate the proposed range of aesthetic effects and workmanship.
5. Obtain Owner's Representative's and Architect's approval of mockups before starting work, fabrication, or construction.

a. Allow three days for initial review and each re-review of each mockup.

6. Maintain mockups during construction in an undisturbed condition as a standard for judging the completed Work.
7. Demolish and remove mockups when directed unless otherwise indicated.

L. Integrated Exterior Mockups: Construct integrated exterior mockup as indicated on Drawings or otherwise permitted herein. Coordinate installation of exterior envelope materials and products for which mockups are required in individual Specification Sections, along with supporting materials.

M. Room Mockups: Construct room mockups incorporating required materials and assemblies, finished according to requirements. Provide required lighting and additional lighting where required to enable Architect to evaluate quality of the Work. Provide one Wing C/F classroom mockup and one Wing E classroom mockup for ceiling, cabinetwork and lighting installation.

1.10 QUALITY CONTROL

A. Owner Responsibilities: Where quality-control services are indicated as Owner's responsibility, Owner will engage a qualified testing agency to perform these services.

1. Owner will furnish Contractor with names, addresses, and telephone numbers of testing agencies engaged and a description of types of testing and inspecting they are engaged to perform.
2. Payment for these services will be made from testing and inspecting allowances, as authorized by Change Orders.
3. Costs for retesting and reinspecting construction that replaces or is necessitated by work that failed to comply with the Contract Documents will be charged to Contractor, and the Contract Sum may be adjusted as stipulated in the Construction Contract.

B. Contractor Responsibilities: Tests and inspections not explicitly assigned to Owner are Contractor's responsibility. Perform additional quality-control activities required to verify that the Work complies with requirements, whether specified or not.

1. Unless otherwise indicated, provide quality-control services specified and those required by authorities having jurisdiction. Perform quality-control services required of Contractor by authorities having jurisdiction, whether specified or not.
2. Where services are indicated as Contractor's responsibility, engage a qualified testing agency to perform these quality-control services.

a. Contractor shall not employ same entity engaged by Owner, unless agreed to in writing by Owner.

3. Notify testing agencies at least **24** hours in advance of time when Work that requires testing or inspecting will be performed.
4. Where quality-control services are indicated as Contractor's responsibility, submit a certified written report, in duplicate, of each quality-control service.
5. Testing and inspecting requested by Contractor and not required by the Contract Documents are Contractor's responsibility.
6. Submit additional copies of each written report directly to authorities having jurisdiction, when they so direct.

C. Manufacturer's Field Services: Where indicated, engage a factory-authorized service representative to inspect field-assembled components and equipment installation, including service connections. Report results in writing as specified in Section 013300 "Submittal Procedures."

D. Manufacturer's Technical Services: Where indicated, engage a manufacturer's technical representative to observe and inspect the Work. Manufacturer's technical representative's services include participation in pre-installation conferences,

examination of substrates and conditions, verification of materials, observation of Installer activities, inspection of completed portions of the Work, and submittal of written reports.

E. Retesting/Reinspecting: Regardless of whether original tests or inspections were Contractor's responsibility, provide quality-control services, including retesting and reinspecting, for construction that replaced Work that failed to comply with the Contract Documents.

F. Testing Agency Responsibilities: Cooperate with Architect and Contractor in performance of duties. Provide qualified personnel to perform required tests and inspections.

1. Notify Architect, Owner's Representative and Contractor promptly of irregularities or deficiencies observed in the Work during performance of its services.
2. Determine the location from which test samples will be taken and in which in-situ tests are conducted.
3. Conduct and interpret tests and inspections and state in each report whether tested and inspected work complies with or deviates from requirements.
4. Submit a certified written report, in duplicate, of each test, inspection, and similar quality-control service through Contractor.
5. Do not release, revoke, alter, or increase the Contract Document requirements or approve or accept any portion of the Work.
6. Do not perform any duties of Contractor.

G. Associated Services: Cooperate with agencies performing required tests, inspections, and similar quality-control services, and provide reasonable auxiliary services as requested. Notify agency sufficiently in advance of operations to permit assignment of personnel. Provide the following:

1. Access to the Work.
2. Incidental labor and facilities necessary to facilitate tests and inspections.
3. Adequate quantities of representative samples of materials that require testing and inspecting. Assist agency in obtaining samples.
4. Facilities for storage and field curing of test samples.
5. Delivery of samples to testing agencies.
6. Preliminary design mix proposed for use for material mixes that require control by testing agency.
7. Security and protection for samples and for testing and inspecting equipment at Project site.

H. Coordination: Coordinate sequence of activities to accommodate required quality-assurance and -control services with a minimum of delay and to avoid necessity of removing and replacing construction to accommodate testing and inspecting.

1. Schedule times for tests, inspections, obtaining samples, and similar activities.

I. Schedule of Tests and Inspections: Prepare a schedule of tests, inspections, and similar quality-control services required by the Contract Documents. Coordinate and submit concurrently with Contractor's construction schedule. Update as the Work progresses.

1. Distribution: Distribute schedule to Owner, Architect, testing agencies, and each party involved in performance of portions of the Work where tests and inspections are required.

1.11 SPECIAL TESTS AND INSPECTIONS

A. Special Tests and Inspections: Owner will engage a qualified special inspector to conduct special tests and inspections required by authorities having jurisdiction as the responsibility of Owner, as indicated in Statement of Special Inspections outlined in Section 019100, “Special Inspections.”

PART 2 - PRODUCTS (Not Used)

PART 3 - EXECUTION

3.1 TEST AND INSPECTION LOG

A. Test and Inspection Log: Prepare a record of tests and inspections. Include the following:

1. Date test or inspection was conducted.
2. Description of the Work tested or inspected.
3. Date test or inspection results were transmitted to Architect.
4. Identification of testing agency or special inspector conducting test or inspection.

B. Maintain log at Project site. Post changes and revisions as they occur. Provide access to test and inspection log for Architect's and Owner Representative’s reference during normal working hours.

3.2 REPAIR AND PROTECTION

A. General: On completion of testing, inspecting, sample taking, and similar services, repair damaged construction and restore substrates and finishes.

1. Provide materials and comply with installation requirements specified in other Specification Sections or matching existing substrates and finishes. Restore patched areas and extend restoration into adjoining areas with durable seams that are as invisible as possible. Comply with the Contract Document requirements for cutting and patching in Section 017300 "Execution."

B. Protect construction exposed by or for quality-control service activities.

C. Repair and protection are Contractor's responsibility, regardless of the assignment of responsibility for quality-control services.

END OF SECTION 014000

SECTION 015000 - TEMPORARY FACILITIES

PART 1 - GENERAL

1.1 RELATED DOCUMENTS

A. Drawings and general provisions of the Contract, including General and Supplementary Conditions and other Division-1 Specification Sections, apply to this Section.

1.2 SUMMARY

A. This Section specifies requirements for temporary services and facilities, including utilities, construction and support facilities, security and protection.

B. Temporary construction and support facilities required include but are not limited to:

1. Water service and distribution
2. Temporary electric power and lights
3. Storage facilities for construction materials.
4. Sanitary facilities, including drinking water.
5. Waste disposal services.

C. Power and water are available at the schools for no cost to the Contractor. However, the Contractor shall make all necessary connections and distribution to serve the project. The Contractor shall remove distribution and connection at the conclusion of the work.

D. Security and protection facilities required include but are not limited to:

1. Temporary fire protection.
2. Barricades, warning signs, lights.
3. Environmental protection.

1.3 QUALITY ASSURANCE

A. Regulations: Comply with industry standards and applicable laws and regulations of authorities having jurisdiction, including but not limited to:

1. Building Code requirements.
2. Health and safety regulations.
3. Police, Fire Department and Rescue Squad rules.
4. Environmental protection regulations.

B. Standards: Comply with NFPA Code 241, "Building Construction and Demolition Operations", ANSI-A10 Series standards for "Safety Requirements for Construction and Demolition".

C. Refer to "Guidelines for Bid Conditions for Temporary Job Utilities and Services", prepared jointly by AGC and ASC, for industry recommendations.

1.4 PROJECT CONDITIONS

A. Conditions of Use: Keep temporary services and facilities clean and neat in appearance. Operate in a safe and efficient manner. Take necessary fire prevention measures. Do not overload facilities, or permit them to interfere with progress. Do not allow hazardous dangerous or unsanitary conditions, or public nuisances to develop or persist on the site. Remove asphalt mops from roof at the end of each working day.

B. An aerial view of the site is appended to this section. Locate staging and temporary laydown areas where indicated or otherwise directed by Owner. All ingress/egress to site is to be from School Lane off Lakeside Drive at west side of school.

PART 2 - PRODUCTS

2.1 MATERIALS

A. Tarpaulins: Provide waterproof, fire-resistant, UL labeled tarpaulins with flame-spread rating of 15 or less. For temporary enclosures provide translucent nylon reinforced laminated polyethylene or polyvinyl chloride fire retardant tarpaulins.

1. For tarpaulins to protect from Asphalt spills on the interior of the building provide tarpaulins that resist melting when exposed to hot asphalt. These tarpaulins should only be used over critical care items i.e. Computers, Telephones Televisions, etc.

B. Drinking Water Facilities: Provide containerized tap-dispenser bottled-water type drinking water units, including paper cup supply.

C. Temporary Toilet Units: Provide self-contained single-occupant toilet units of the chemical, aerated recirculation, or combustion type, properly vented and fully enclosed with a glass fiber reinforced polyester shell or similar nonabsorbent material, and supply unit(s) with toilet tissue.

D. First Aid Supplies: Comply with governing regulations.

E. Fire Extinguishers: Provide hand-carried, portable, UL-rated, class "ABC" dry

chemical extinguishers, or a combination of extinguishers of NFPA recommended classes for the exposures, Comply with NFPA 10 and 241 for classification, extinguishing agent and size required by location and class of fire exposure.

PART 3 - EXECUTION

3.1 INSTALLATION

A. Use qualified personnel for installation of temporary facilities. Locate facilities where they will serve the Project adequately and result in minimum interference with performance of the Work. Relocate and modify facilities as required.

B. Provide each facility ready for use when needed to avoid delay. Maintain and modify as required. Do not remove until facilities are no longer needed.

C. Locate storage trailers, sanitary facilities and other temporary support facilities for easy access, and where approved by the Owner.

D. Maintain temporary support facilities until Substantial Completion, or until personnel will no longer be working on the roof.

E. Sanitary facilities include temporary toilets, wash facilities and drinking water fixtures. Comply with regulations and health codes for the type, number, location, operation and maintenance of fixtures and facilities. Install where facilities will best serve the Project's needs.

1. Provide toilet tissue, paper towels, paper cups and similar disposable materials for each facility. Provide covered waste containers for used material.

F. Toilets: Install self-contained toilet units in a location approved by the Owner. Shield toilets to ensure privacy. Use of pit-type privies will not be permitted. Have toilets regularly serviced to keep them clean and in good condition.

G. Collection and Disposal of Waste and Demolition Debris: Collect waste from construction areas and elsewhere daily and remove construction debris from the site weekly or as soon as containers are nearly fully. Comply with requirements of NFPA 241 for removal of combustible waste material and debris. Enforce requirements strictly. Do not hold materials more than 7 days during normal weather or 3 days when the temperature is expected to rise above 80 deg F (27 deg C). Handle hazardous, dangerous, or unsanitary waste by containerizing properly. Dispose of material in a lawful manner.

3.2 SECURITY AND PROTECTION FACILITIES INSTALLATION

A. Temporary Fire Protection: Comply with NFPA 10 "Standard for Portable Fire Extinguishers," and NFPA 241 "Standard for Safeguarding Construction, Alterations and Demolition Operations." Locate fire extinguishers near tankers and kettles and on the roof during roofing operations.

B. Barricades: Provide temporary barricades where roofing operations are going on to keep children away.

C. Security: Where materials and equipment must be stored, and are of value or attractive for theft, provide a secure lockup. Remove all equipment from around the building at the end of each working day that would provide a means of egress to the roof, and lock up building at days end.

D. Environmental Protection: Provide protection, operate temporary facilities and conduct construction in ways and by methods that comply with environmental regulations, and minimize the possibility that air, waterways and subsoil might be contaminated or polluted, or that other undesirable effects might result. Avoid use of tools and equipment which produce harmful noise. Restrict use of noise making tools and equipment to hours that will minimize complaints from persons or firms near the site.

3.3 OPERATION, TERMINATION AND REMOVAL

A. Supervision: Enforce strict discipline in use of temporary facilities. Limit availability of temporary facilities to essential and intended uses to minimize waste and abuse.

B. Maintenance: Maintain facilities in good operating condition until removal.

C. Termination and Removal: Unless the Architect requests that it be maintained longer, remove each temporary facility at Substantial Completion.

END OF SECTION 015000

EXISTING
F.H.
PROPOSED
LAYDOWN
AREA
SCHOOL LANE
School Ln
EXISTING
F.H.
N
620
LAKESIDE DRIVE

THIS PAGE LEFT INTENTIONALLY BLANK

SECTION 016000 - PRODUCT REQUIREMENTS

PART 1 - GENERAL

1.1 RELATED DOCUMENTS

A. Drawings and general provisions of the Contract, including General and Supplementary Conditions and other Division 01 Specification Sections, apply to this Section.

1.2 SUMMARY

A. Section includes administrative and procedural requirements for selection of products for use in Project; product delivery, storage, and handling; manufacturers' standard warranties on products; special warranties; and comparable products.

B. Related Requirements:

1. Section 012100 "Allowances" for products selected under an allowance.
2. Section 012300 "Alternates" for products selected under an alternate.
3. Section 012500 "Substitution Procedures" for requests for substitutions.

1.3 DEFINITIONS

A. Products: Items obtained for incorporating into the Work, whether purchased for Project or taken from previously purchased stock. The term "product" includes the terms "material," "equipment," "system," and terms of similar intent.

1. Named Products: Items identified by manufacturer's product name, including make or model number or other designation shown or listed in manufacturer's published product literature that is current as of date of the Contract Documents.
2. New Products: Items that have not previously been incorporated into another project or facility. Products salvaged or recycled from other projects are not considered new products.
3. Comparable Product: Product that is demonstrated and approved through submittal process to have the indicated qualities related to type, function, dimension, in-service performance, physical properties, appearance, and other characteristics that equal or exceed those of specified product.

B. Basis-of-Design Product Specification: A specification in which a specific manufacturer's product is named and accompanied by the words "basis-of-design product," including make or model number or other designation, to establish the

significant qualities related to type, function, dimension, in-service performance, physical properties, appearance, and other characteristics for purposes of evaluating comparable products of additional manufacturers named in the specification.

1.4 ACTION SUBMITTALS

A. Comparable Product Requests: Submit request for consideration of each comparable product. Identify product or fabrication or installation method to be replaced. Include Specification Section number and title and Drawing numbers and titles.

1. Include data to indicate compliance with the requirements specified in "Comparable Products" Article.
2. Architect's Action: If necessary, Architect will request additional information or documentation for evaluation within one week of receipt of a comparable product request. Architect will notify Contractor of approval or rejection of proposed comparable product request within 15 days of receipt of request, or seven days of receipt of additional information or documentation, whichever is later.

a. Form of Approval: As specified in Section 013300 "Submittal Procedures."
b. Use product specified if Architect does not issue a decision on use of a comparable product request within time allocated.

B. Basis-of-Design Product Specification Submittal: Comply with requirements in Section 013300 "Submittal Procedures." Show compliance with requirements.

1.5 QUALITY ASSURANCE

A. Compatibility of Options: If Contractor is given option of selecting between two or more products for use on Project, select product compatible with products previously selected, even if previously selected products were also options.

1. Each contractor is responsible for providing products and construction methods compatible with products and construction methods of other contractors.
2. If a dispute arises between contractors over concurrently selectable but incompatible products, Architect will determine which products shall be used.

1.6 PRODUCT DELIVERY, STORAGE, AND HANDLING

A. Deliver, store, and handle products using means and methods that will prevent damage, deterioration, and loss, including theft and vandalism. Comply with manufacturer's written instructions.

B. Delivery and Handling:

1. Schedule delivery to minimize long-term storage at Project site and to prevent overcrowding of construction spaces.
2. Coordinate delivery with installation time to ensure minimum holding time for items that are flammable, hazardous, easily damaged, or sensitive to deterioration, theft, and other losses.
3. Deliver products to Project site in an undamaged condition in manufacturer's original sealed container or other packaging system, complete with labels and instructions for handling, storing, unpacking, protecting, and installing.
4. Inspect products on delivery to determine compliance with the Contract Documents and to determine that products are undamaged and properly protected.

C. Storage:

1. Store products to allow for inspection and measurement of quantity or counting of units.
2. Store materials in a manner that will not endanger Project structure.
3. Store products that are subject to damage by the elements, under cover in a weathertight enclosure above ground, with ventilation adequate to prevent condensation.
4. Protect foam plastic from exposure to sunlight, except to extent necessary for period of installation and concealment.
5. Comply with product manufacturer's written instructions for temperature, humidity, ventilation, and weather-protection requirements for storage.
6. Protect stored products from damage and liquids from freezing.
7. Provide a secure location and enclosure at Project site for storage of materials and equipment by Owner's construction forces. Coordinate location with Owner.

1.7 PRODUCT WARRANTIES

A. Warranties specified in other Sections shall be in addition to, and run concurrent with, other warranties required by the Contract Documents. Manufacturer's disclaimers and limitations on product warranties do not relieve Contractor of obligations under requirements of the Contract Documents.

1. Manufacturer's Warranty: Written warranty furnished by individual manufacturer for a particular product and specifically endorsed by manufacturer to Owner.
2. Special Warranty: Written warranty required by the Contract Documents to provide specific rights for Owner.

B. Special Warranties: Prepare a written document that contains appropriate terms and identification, ready for execution.

1. Manufacturer's Standard Form: Modified to include Project-specific information and properly executed.
2. Specified Form: When specified forms are included with the Specifications, prepare a written document using indicated form properly executed.
3. See other Sections for specific content requirements and particular requirements for submitting special warranties.

C. Submittal Time: Comply with requirements in Section 017700 "Closeout Procedures."

PART 2 - PRODUCTS

2.1 PRODUCT SELECTION PROCEDURES

A. General Product Requirements: Provide products that comply with the Contract Documents, are undamaged and, unless otherwise indicated, are new at time of installation.

1. Provide products complete with accessories, trim, finish, fasteners, and other items needed for a complete installation and indicated use and effect.
2. Standard Products: If available, and unless custom products or nonstandard options are specified, provide standard products of types that have been produced and used successfully in similar situations on other projects.
3. Owner reserves the right to limit selection to products with warranties not in conflict with requirements of the Contract Documents.
4. Where products are accompanied by the term "as selected," Architect will make selection.
5. Descriptive, performance, and reference standard requirements in the Specifications establish salient characteristics of products.
6. Or Equal: For products specified by name and accompanied by the term "or equal," or "or approved equal," or "or approved," comply with requirements in "Comparable Products" Article to obtain approval for use of an unnamed product.

B. Product Selection Procedures:

1. Product: Where Specifications name a single manufacturer and product, provide the named product that complies with requirements. Comparable products or substitutions for Contractor's convenience will not be considered.
2. Manufacturer/Source: Where Specifications name a single manufacturer or source, provide a product by the named manufacturer or source that complies with requirements. Comparable products or substitutions for Contractor's convenience will not be considered.
3. Products:

    a. Restricted List: Where Specifications include a list of names of both manufacturers and products, provide one of the products listed that complies with requirements. Comparable products or substitutions for Contractor's convenience will be considered unless otherwise indicated.
    b. Nonrestricted List: Where Specifications include a list of names of both available manufacturers and products, provide one of the products listed, or an unnamed product, that complies with requirements. Comply with requirements in "Comparable Products" Article for consideration of an unnamed product.

4. Manufacturers:

    a. Restricted List: Where Specifications include a list of manufacturers' names, provide a product by one of the manufacturers listed that complies with requirements. Comparable products or substitutions for Contractor's convenience will be considered unless otherwise indicated.
    b. Nonrestricted List: Where Specifications include a list of available manufacturers, provide a product by one of the manufacturers listed, or a product by an unnamed manufacturer, that complies with requirements. Comply with requirements in "Comparable Products" Article for consideration of an unnamed manufacturer's product.

5. Basis-of-Design Product: Where Specifications name a product, or refer to a product indicated on Drawings, and include a list of manufacturers, provide the specified or indicated product or a comparable product by one of the other named manufacturers. Drawings and Specifications indicate sizes, profiles, dimensions, and other characteristics that are based on the product named. Comply with requirements in "Comparable Products" Article for consideration of an unnamed product by one of the other named manufacturers.

C. Visual Matching Specification: Where Specifications require "match Architect's sample", provide a product that complies with requirements and matches Architect's sample. Architect's decision will be final on whether a proposed product matches.

1. If no product available within specified category matches and complies with other specified requirements, comply with requirements in Section 012500 "Substitution Procedures" for proposal of product.

D. Visual Selection Specification: Where Specifications include the phrase "as selected by Architect from manufacturer's full range" or similar phrase, select a product that complies with requirements. Architect will select color, gloss, pattern, density, or texture from manufacturer's product line that includes both standard and premium items.

2.2 COMPARABLE PRODUCTS

A. Conditions for Consideration: Architect will consider Contractor's request for comparable product when the following conditions are satisfied. If the following conditions are not satisfied, Architect may return requests without action, except to record noncompliance with these requirements:

1. Evidence that the proposed product does not require revisions to the Contract Documents, that it is consistent with the Contract Documents and will produce the indicated results, and that it is compatible with other portions of the Work.
2. Detailed comparison of significant qualities of proposed product with those named in the Specifications. Significant qualities include attributes such as performance, weight, size, durability, visual effect, and specific features and requirements indicated.
3. Evidence that proposed product provides specified warranty.
4. List of similar installations for completed projects with project names and addresses and names and addresses of architects and owners, if requested.
5. Samples, if requested.

PART 3 - EXECUTION (Not Used)

END OF SECTION 016000

SECTION 017300 - EXECUTION

PART 1 - GENERAL

1.1 RELATED DOCUMENTS

A. Drawings and general provisions of the Contract, including General and Supplementary Conditions and other Division 01 Specification Sections, apply to this Section.

1.2 SUMMARY

A. Section includes general administrative and procedural requirements governing execution of the Work including, but not limited to, the following:

1. Construction layout.
2. Field engineering and surveying.
3. Installation of the Work.
4. Cutting and patching.
5. Coordination of Owner-furnished products.
6. Progress cleaning.
7. Starting and adjusting.
8. Protection of installed construction.

B. Related Requirements:

1. Section 011000 "Summary" for limits on use of Project site.
2. Section 013300 "Submittal Procedures" for submitting surveys.
3. Section 017700 "Closeout Procedures" for submitting final property survey with Project Record Documents, recording of Owner-accepted deviations from indicated lines and levels, and final cleaning.
4. Section 024119 "Selective Demolition" for demolition and removal of selected portions of the building.
5. Section 078413 "Penetration Firestopping" for patching penetrations in fire-rated construction.

1.3 DEFINITIONS

A. Cutting: Removal of in-place construction necessary to permit installation or performance of other work.

B. Patching: Fitting and repair work required to restore construction to original conditions after installation of other work.

1.4 INFORMATIONAL SUBMITTALS

A. Cutting and Patching Plan: Submit plan describing procedures at least **10** days prior to the time cutting and patching will be performed. Include the following information:

1. Extent: Describe reason for and extent of each occurrence of cutting and patching.
2. Changes to In-Place Construction: Describe anticipated results. Include changes to structural elements and operating components as well as changes in building appearance and other significant visual elements.
3. Products: List products to be used for patching and firms or entities that will perform patching work.
4. Dates: Indicate when cutting and patching will be performed.
5. Utilities and Mechanical and Electrical Systems: List services and systems that cutting and patching procedures will disturb or affect. List services and systems that will be relocated and those that will be temporarily out of service. Indicate length of time permanent services and systems will be disrupted.

   a. Include description of provisions for temporary services and systems during interruption of permanent services and systems.

1.5 QUALITY ASSURANCE

A. Cutting and Patching: Comply with requirements for and limitations on cutting and patching of construction elements.

1. Structural Elements: When cutting and patching structural elements, notify Architect of locations and details of cutting and await directions from Architect before proceeding. Shore, brace, and support structural elements during cutting and patching. Do not cut and patch structural elements in a manner that could change their load-carrying capacity or increase deflection

   a. Roof deck.
   b. Roof joists or beams.
   c. Wall openings in CMU or brick veneer masonry that exceed two square feet or 1’-4” in width, whichever is less.

2. Operational Elements: Do not cut and patch operating elements and related components in a manner that results in reducing their capacity to perform as intended or that results in increased maintenance or decreased operational life or safety. Operational elements include the following:

a. Primary operational systems and equipment.
b. Fire separation assemblies.
c. Air or smoke barriers.
d. Fire-suppression systems.
e. Mechanical systems piping and ducts.
f. Control systems.
g. Communication systems.
h. Fire-detection and -alarm systems.
i. Conveying systems.
j. Electrical wiring systems.
k. Operating systems of special construction.

3. Other Construction Elements: Do not cut and patch other construction elements or components in a manner that could change their load-carrying capacity, that results in reducing their capacity to perform as intended, or that results in increased maintenance or decreased operational life or safety. Other construction elements include, but are not limited to, the following:

a. Water, moisture, or vapor barriers.
b. Through-wall flashings.
c. Equipment supports.
d. Piping, ductwork, vessels, and equipment.
e. Noise- and vibration-control elements and systems.
f. Wall and soffit panels.

4. Visual Elements: Do not cut and patch construction in a manner that results in visual evidence of cutting and patching. Do not cut and patch exposed construction in a manner that would, in Architect's opinion, reduce the building's aesthetic qualities. Remove and replace construction that has been cut and patched in a visually unsatisfactory manner.

B. Cutting and Patching Conference: Before proceeding, meet at Project site with parties involved in cutting and patching, including mechanical and electrical trades. Review areas of potential interference and conflict. Coordinate procedures and resolve potential conflicts before proceeding.

C. Manufacturer's Installation Instructions: Obtain and maintain on-site manufacturer's written recommendations and instructions for installation of products and equipment.

PART 2 - PRODUCTS

2.1 MATERIALS

A. General: Comply with requirements specified in other Sections.

B. In-Place Materials: Use materials for patching identical to in-place materials. For exposed surfaces, use materials that visually match in-place adjacent surfaces to the fullest extent possible.

1. If identical materials are unavailable or cannot be used, use materials that, when installed, will provide a match acceptable to Architect for the visual and functional performance of in-place materials.

PART 3 - EXECUTION

3.1 EXAMINATION

A. Existing Conditions: The existence and location of underground and other utilities and construction indicated as existing are not guaranteed. Before beginning sitework, investigate and verify the existence and location of underground utilities, mechanical and electrical systems, and other construction affecting the Work.

1. Before construction, verify the location and invert elevation at points of connection of sanitary sewer, storm sewer, and water-service piping; underground electrical services, and other utilities.
2. Furnish location data for work related to Project that must be performed by public utilities serving Project site.

B. Examination and Acceptance of Conditions: Before proceeding with each component of the Work, examine substrates, areas, and conditions, with Installer or Applicator present where indicated, for compliance with requirements for installation tolerances and other conditions affecting performance. Record observations.

1. Examine roughing-in for mechanical and electrical systems to verify actual locations of connections before equipment and fixture installation.
2. Examine walls, floors, and roofs for suitable conditions where products and systems are to be installed.
3. Verify compatibility with and suitability of substrates, including compatibility with existing finishes or primers.

C. Written Report: Where a written report listing conditions detrimental to performance of the Work is required by other Sections, include the following:

1. Description of the Work.
2. List of detrimental conditions, including substrates.
3. List of unacceptable installation tolerances.
4. Recommended corrections.

D. Proceed with installation only after unsatisfactory conditions have been corrected. Proceeding with the Work indicates acceptance of surfaces and conditions.

3.2 PREPARATION

A. Existing Utility Information: Furnish information to Owner that is necessary to adjust, move, or relocate existing utility structures, utility poles, lines, services, or other utility appurtenances located in or affected by construction. Coordinate with authorities having jurisdiction.

B. Field Measurements: Take field measurements as required to fit the Work properly. Recheck measurements before installing each product. Where portions of the Work are indicated to fit to other construction, verify dimensions of other construction by field measurements before fabrication. Coordinate fabrication schedule with construction progress to avoid delaying the Work.

C. Space Requirements: Verify space requirements and dimensions of items shown diagrammatically on Drawings.

D. Review of Contract Documents and Field Conditions: Immediately on discovery of the need for clarification of the Contract Documents caused by differing field conditions outside the control of Contractor, submit a request for information to Architect according to requirements in Section 013100 "Project Management and Coordination."

3.3 CONSTRUCTION LAYOUT

A. Verification: Before proceeding to lay out the Work, verify layout information shown on Drawings, in relation to the property survey and existing benchmarks. If discrepancies are discovered, notify Architect promptly.

B. Site Improvements: Locate and lay out site improvements where indicated, including pavements, grading, fill and topsoil placement, utility slopes, and rim and invert elevations.

C. Building Lines and Levels: Locate and lay out control lines and levels for structures, building foundations, column grids, and floor levels, including those required for

mechanical and electrical work. Transfer survey markings and elevations for use with control lines and levels. Level foundations and piers from two or more locations.

D. Record Log: Maintain a log of layout control work. Record deviations from required lines and levels. Include beginning and ending dates and times of surveys, weather conditions, name and duty of each survey party member, and types of instruments and tapes used. Make the log available for reference by Architect and Owner's Representative.

3.4 INSTALLATION

A. General: Locate the Work and components of the Work accurately, in correct alignment and elevation, as indicated.

1. Make vertical work plumb and make horizontal work level.
2. Where space is limited, install components to maximize space available for maintenance and ease of removal for replacement.
3. Conceal pipes, ducts, and wiring in finished areas unless otherwise indicated.
4. Maintain minimum headroom clearance of 96 inches (2440 mm) in occupied spaces and 90 inches (2300 mm) in unoccupied spaces.

B. Comply with manufacturer's written instructions and recommendations for installing products in applications indicated.

C. Install products at the time and under conditions that will ensure the best possible results. Maintain conditions required for product performance until Substantial Completion.

D. Conduct construction operations so no part of the Work is subjected to damaging operations or loading in excess of that expected during normal conditions of occupancy.

E. Sequence the Work and allow adequate clearances to accommodate movement of construction items on site and placement in permanent locations.

F. Tools and Equipment: Do not use tools or equipment that produce harmful noise levels.

G. Templates: Obtain and distribute to the parties involved templates for work specified to be factory prepared and field installed. Check Shop Drawings of other work to confirm that adequate provisions are made for locating and installing products to comply with indicated requirements.

H. Attachment: Provide blocking and attachment plates and anchors and fasteners of adequate size and number to securely anchor each component in place, accurately located and aligned with other portions of the Work. Where size and

type of attachments are not indicated, verify size and type required for load conditions.

1. Mounting Heights: Where mounting heights are not indicated, mount components at heights directed by Architect.
2. Allow for building movement, including thermal expansion and contraction.
3. Coordinate installation of anchorages. Furnish setting drawings, templates, and directions for installing anchorages, including sleeves, concrete inserts, anchor bolts, and items with integral anchors, that are to be embedded in concrete or masonry. Deliver such items to Project site in time for installation.

I. Joints: Make joints of uniform width. Where joint locations in exposed work are not indicated, arrange joints for the best visual effect. Fit exposed connections together to form hairline joints.

J. Hazardous Materials: Use products, cleaners, and installation materials that are not considered hazardous.

3.5 CUTTING AND PATCHING

A. Cutting and Patching, General: Employ skilled workers to perform cutting and patching. Proceed with cutting and patching at the earliest feasible time, and complete without delay.

1. Cut in-place construction to provide for installation of other components or performance of other construction, and subsequently patch as required to restore surfaces to their original condition.

B. Existing Warranties: Remove, replace, patch, and repair materials and surfaces cut or damaged during installation or cutting and patching operations, by methods and with materials so as not to void existing warranties.

C. Temporary Support: Provide temporary support of work to be cut.

D. Protection: Protect in-place construction during cutting and patching to prevent damage. Provide protection from adverse weather conditions for portions of Project that might be exposed during cutting and patching operations.

E. Adjacent Occupied Areas: Where interference with use of adjoining areas or interruption of free passage to adjoining areas is unavoidable, coordinate cutting and patching according to requirements in Section 011000 "Summary."

F. Existing Utility Services and Mechanical/Electrical Systems: Where existing services/systems are required to be removed, relocated, or abandoned, bypass such services/systems before cutting to prevent interruption to occupied areas.

G. Cutting: Cut in-place construction by sawing, drilling, breaking, chipping, grinding, and similar operations, including excavation, using methods least likely to damage elements retained or adjoining construction. If possible, review proposed procedures with original Installer; comply with original Installer's written recommendations.

1. In general, use hand or small power tools designed for sawing and grinding, not hammering and chopping. Cut holes and slots neatly to minimum size required, and with minimum disturbance of adjacent surfaces. Temporarily cover openings when not in use.
2. Finished Surfaces: Cut or drill from the exposed or finished side into concealed surfaces.
3. Concrete and Masonry: Cut using a cutting machine, such as an abrasive saw or a diamond-core drill.
4. Excavating and Backfilling: Comply with requirements in applicable Sections where required by cutting and patching operations.
5. Mechanical and Electrical Services: Cut off pipe or conduit in walls or partitions to be removed. Cap, valve, or plug and seal remaining portion of pipe or conduit to prevent entrance of moisture or other foreign matter after cutting.
6. Proceed with patching after construction operations requiring cutting are complete.

H. Patching: Patch construction by filling, repairing, refinishing, closing up, and similar operations following performance of other work. Patch with durable seams that are as invisible as practicable. Provide materials and comply with installation requirements specified in other Sections, where applicable.

1. Inspection: Where feasible, test and inspect patched areas after completion to demonstrate physical integrity of installation.
2. Exposed Finishes: Restore exposed finishes of patched areas and extend finish restoration into retained adjoining construction in a manner that will minimize evidence of patching and refinishing.

   a. Clean piping, conduit, and similar features before applying paint or other finishing materials.
   b. Restore damaged pipe covering to its original condition.

3. Floors and Walls: Where walls or partitions that are removed extend one finished area into another, patch and repair floor and wall surfaces in the new space. Provide an even surface of uniform finish, color, texture, and appearance. Remove in-place floor and wall coverings and replace with new materials, if necessary, to achieve uniform color and appearance.

   a. Where patching occurs in a painted surface, prepare substrate and apply primer and intermediate paint coats appropriate for substrate over

the patch, and apply final paint coat over entire unbroken surface containing the patch. Provide additional coats until patch blends with adjacent surfaces.

4. Ceilings: Patch, repair, or rehang in-place ceilings as necessary to provide an even-plane surface of uniform appearance.
5. Exterior Building Enclosure: Patch components in a manner that restores enclosure to a weathertight condition and ensures thermal and moisture integrity of building enclosure.

I. Cleaning: Clean areas and spaces where cutting and patching are performed. Remove paint, mortar, oils, putty, and similar materials from adjacent finished surfaces.

3.6 OWNER-INSTALLED PRODUCTS

A. Site Access: Provide access to Project site for Owner's construction personnel.

B. Coordination: Coordinate construction and operations of the Work with work performed by Owner's construction personnel.

1. Construction Schedule: Inform Owner of Contractor's preferred construction schedule for Owner's portion of the Work. Adjust construction schedule based on a mutually agreeable timetable. Notify Owner if changes to schedule are required due to differences in actual construction progress.
2. Preinstallation Conferences: Include Owner's construction personnel at preinstallation conferences covering portions of the Work that are to receive Owner's work. Attend preinstallation conferences conducted by Owner's construction personnel if portions of the Work depend on Owner's construction.

3.7 PROGRESS CLEANING

A. General: Clean Project site and work areas daily, including common areas. Enforce requirements strictly. Dispose of materials lawfully.

1. Comply with requirements in NFPA 241 for removal of combustible waste materials and debris.
2. Do not hold waste materials more than seven days during normal weather or three days if the temperature is expected to rise above 80 deg F (27 deg C).
3. Containerize hazardous and unsanitary waste materials separately from other waste. Mark containers appropriately and dispose of legally, according to regulations.

   a. Use containers intended for holding waste materials of type to be stored.

4. Coordinate progress cleaning for joint-use areas where Contractor and other contractors are working concurrently.

B. Site: Maintain Project site free of waste materials and debris.

C. Work Areas: Clean areas where work is in progress to the level of cleanliness necessary for proper execution of the Work.

1. Remove liquid spills promptly.
2. Where dust would impair proper execution of the Work, broom-clean or vacuum the entire work area, as appropriate.

D. Installed Work: Keep installed work clean. Clean installed surfaces according to written instructions of manufacturer or fabricator of product installed, using only cleaning materials specifically recommended. If specific cleaning materials are not recommended, use cleaning materials that are not hazardous to health or property and that will not damage exposed surfaces.

E. Concealed Spaces: Remove debris from concealed spaces before enclosing the space.

F. Exposed Surfaces in Finished Areas: Clean exposed surfaces and protect as necessary to ensure freedom from damage and deterioration at time of Substantial Completion.

G. Waste Disposal: Do not bury or burn waste materials on-site. Do not wash waste materials down sewers or into waterways. Comply with waste disposal requirements in Section 015000 "Temporary Facilities."

H. During handling and installation, clean and protect construction in progress and adjoining materials already in place. Apply protective covering where required to ensure protection from damage or deterioration at Substantial Completion.

I. Clean and provide maintenance on completed construction as frequently as necessary through the remainder of the construction period. Adjust and lubricate operable components to ensure operability without damaging effects.

J. Limiting Exposures: Supervise construction operations to assure that no part of the construction, completed or in progress, is subject to harmful, dangerous, damaging, or otherwise deleterious exposure during the construction period.

3.8 STARTING AND ADJUSTING

A. Coordinate startup and adjusting of equipment and operating components with requirements in Section 230500 "Heating, Ventilating and Air Conditioning."

B. Start equipment and operating components to confirm proper operation. Remove malfunctioning units, replace with new units, and retest.

C. Adjust equipment for proper operation. Adjust operating components for proper operation without binding.

D. Test each piece of equipment to verify proper operation. Test and adjust controls and safeties. Replace damaged and malfunctioning controls and equipment.

E. Manufacturer's Field Service: Comply with qualification requirements in Section 014000 "Quality Requirements."

3.9 PROTECTION OF INSTALLED CONSTRUCTION

A. Provide final protection and maintain conditions that ensure installed Work is without damage or deterioration at time of Substantial Completion.

B. Comply with manufacturer's written instructions for temperature and relative humidity.

END OF SECTION 017300

THIS PAGE LEFT INTENTIONALLY BLANK

SECTION 017400 - WARRANTIES AND BONDS

PART 1 - GENERAL

1.1 RELATED PRODUCTS

A. Drawings and general provisions of the Contract, including General and Supplementary Conditions and other Division - 1 Specifications Sections, apply to this Section.

1.2 SUMMARY

A. This Section specifies general administrative and procedural requirements for warranties and bonds required by the Contract Documents, including manufacturers standard warranties on products and special warranties.

B. General closeout requirements are included in Section "Project Closeout."

C. Specific requirements for warranties for the Work and products and installations that are specified to be warranted, are included in the individual Sections of Divisions 2 through 33.

D. Disclaimers and Limitations: Manufacturer's disclaimers and limitations on product and installation warranties do not relieve the Contractor of the warranty on the Work that incorporates the products, nor does it relieve suppliers, manufacturers, and subcontractors required to countersign special warranties with the Contractor. **Acceptance of this Contract will constitute acceptance of the warranty and guarantee terms specified herein notwithstanding any printed information in the manufacturer's standard literature, or claims for exception expressed after signing of the Contract.**

1.3 WARRANTY REQUIREMENTS

A. Related Damages and Losses: When correcting warranted Work that has failed, remove and replace other Work that has been damaged as a result of such failure or that must be removed and replaced to provide access for correction of warranted Work.

B. Reinstatement of Warranty: When Work covered by a warranty has failed and been corrected by replacement or rebuilding, reinstate the warranty by written endorsement. The term and the conditions of the reinstated warranty shall be equal to the original warranty (the original terms shall apply).

C. Replacement Cost: Upon determination that Work covered by a warranty has failed, replace or rebuild the Work to an acceptable condition complying with requirements of Contract Documents. The Contractor is responsible for the full cost of replacing or rebuilding defective Work regardless of whether the Owner has benefited from use of the Work through a portion of its anticipated useful

service life.

D. Owner's Recourse: Written warranties made to the Owner are in addition to implied warranties, and shall not limit the duties, obligations, rights and remedies otherwise available under the law, nor shall warranty periods be interpreted as limitations on time in which the Owner can enforce such other duties, obligations, rights, or remedies.

E. Rejection of Warranties: The Owner reserves the right to reject warranties and to limit selections to products with warranties not in conflict with requirements of the Contract Documents.

F. The Owner reserves the right to refuse to accept Work for the Project where a special warranty, certification, or similar commitment is required on such Work or part of the Work, until evidence is presented that entities required to countersign such commitments are willing to do so.

1.4 SUBMITTALS

A. Submit written warranties to the Architect prior to the date certified for Substantial Completion. If the Architect's Certificate of Substantial Completion designates a commencement date for warranties other than the date of Substantial Completion for the Work, or a designated portion of the Work, submit written warranties upon request of the Architect.

B. Forms for special warranties are included at the end of Section 075216. Prepare a written document utilizing the appropriate form, ready for execution by the contractor and manufacturer.

C. Refer to individual Sections of Division 3 through 33 for specific content requirements, and particular requirements for submittal of special warranties.

D. Form of Submittal: At Final Completion compile two copies of each required warranty and bond properly executed by the Contractor, or by the Contractor, subcontractor, supplier, or manufacturer. Organize the warranty documents into an orderly sequence based on the table of contents of the Project Manual.

E. Bind warranties and bonds in heavy-duty, commercial quality, durable 3-ring vinyl covered loose-leaf binders, thickness as necessary to accommodate contents, and sized to receive 8-1/2" by 11" paper.

F. Identify each binder on the front and the spine with the typed or printed title "WARRANTIES AND BONDS, the project title, date of Substantial Completion, and the name of the Contractor.

PART 2 - PRODUCTS (Not Applicable)

PART 3 - EXECUTION (Not Applicable)

END OF SECTION 017400

THIS PAGE LEFT INTENTIONALLY BLANK

SECTION 017700 - PROJECT CLOSEOUT

PART 1 - GENERAL

1.1 RELATED DOCUMENTS

A. Drawings and general provisions of the Contract, including General and Supplementary Conditions and other Division-1 Specification Sections, apply to this Section.

1.2 SUMMARY

A. This Section specified administrative and procedural requirements for project closeout, including:

1. Establishment of Substantial Completion
2. Final Acceptance
3. Inspection procedures
4. Project record document submittal
5. Submittal of warranties
6. Final cleaning and Repairs

B. Closeout requirements for specific construction activities are included in the appropriate Sections in Divisions 1 through 33.

1.3 SUBSTANTIAL COMPLETION

A. General: **It is the Contractor's responsibility to initiate procedures for obtaining a Certificate of Substantial Completion. This date of Substantial Completion must be before the expiration of the Contract Time, or liquidated damages will be assessed. At Substantial Completion, all work must be complete with the exception of punch list items. "Substantial Completion" is defined in AIA A201.**

B. Preliminary Procedures: Before requesting inspection for Certificate of Substantial Completion, complete the following. List exceptions in the request.

C. Make a "punchlist" of items needing corrective action. This list should be thorough and list all items required to achieve Final Completion. **Failure to provide a complete punchlist will be grounds for the withholding of the Certificate of Substantial Completion**. Punchlist items relate to work accomplished but requiring correction or modification to satisfy the project requirements. **Work that is incomplete shall not be included on the punchlist for substantial completion and shall be completed prior to initiating substantial completion procedures**.

D. In the Application for Payment that coincides with, or first follows, the date

Substantial Completion is claimed, show 100 percent completion for the portion of the Work claimed as substantially complete. If not already provided, include supporting documentation for completion as indicated in these Contract Documents and a statement showing an accounting of changes to the Contract Sum.

E. Submit specific warranties and guarantees, final certifications, and similar documents

F. Advise Owner of pending insurance changeover requirements.

G. Obtain and submit releases enabling the Owner unrestricted use of the Work and access to services and utilities; include occupancy permits, operating certificates and similar releases.

H. Submit record drawings, and similar final record information.

I. Complete final clean up requirements, including the restoration of any damage to the building or site which occurred during the course of construction.

1.4 INSPECTION PROCEDURES

A. On receipt of a request for inspection, the Architect will either proceed with inspection or advise the Contractor of unfilled requirements. The Architect will prepare the Certificate of Substantial Completion following inspection, if aforementioned requirements are met, or advise the Contractor of construction that must be completed or corrected before the certificate will be issued. The Architect will repeat inspection when requested and assured that the Work has been substantially completed. Results of the completed inspection will form the basis of requirements for final acceptance. Coordinate, if possible, this inspection with the Post-Application Roofing Conference as outlined in Section 01200, "Meetings".

1.5 FINAL ACCEPTANCE

A. Preliminary Procedures: Before requesting final inspection for certification of final acceptance and final payment, complete the following. List exceptions in the request.

B. Submit the final payment request with releases and supporting documentation not previously submitted and accepted. Include certificates of insurance for products and completed operations where required.

C. Submit an updated final statement, accounting for final additional changes to the Contract Sum.

D. Submit a certified copy of the Architect's final inspection list of items to be completed or corrected, stating that each item has been completed or otherwise resolved for acceptance, and the list has been endorsed and dated by the Architect.

E. Submit consent of surety to final payment.

F. Submit a final liquidated damages settlement statement, if applicable.

G. Reinspection Procedures: The Architect will reinspect the Work upon receipt of notice that the Work, including inspection list items from earlier inspections, has been completed, except items whose completion has been delayed because of circumstances acceptable to the Architect. Upon completion of reinspection, the Architect will prepare a certificate of final acceptance, or advise the Contractor of Work that is incomplete or of obligations that have not been fulfilled but are required for final acceptance. If necessary, reinspection will be repeated. **If more than one inspection is needed following the issuing of the Certificate of Substantial Completion, an amount of $750.00 will be deducted from the amount owed the Contractor for each subsequent inspection required of the Architect to verify that the Contractor's work is completed**.

1.6 RECORD DOCUMENT SUBMITTALS

A. Record Documents: See Section 017839 for Record Documents requirements and procedures

1.7 SUBMITTAL OF WARRANTIES

A. Submit two copies of the Roof Manufacturers warranty and two copies of the Roof Contractor warranty.

PART 2 - PRODUCTS (Not Applicable)

PART 3 - EXECUTION

3.1 FINAL CLEANING AND REPAIRS

A. General: General cleaning during construction is required by the General Conditions and included in Section "Temporary Facilities".

B. Cleaning: Complete the following cleaning operations before requesting inspection for Certification of Substantial Completion:

C. Clean the site, including landscape development areas, of rubbish, litter and other foreign substances caused by construction operations. Sweep paved areas broom clean; remove stains, spills and other foreign deposits. Rake grounds that are neither paved nor planted, to a smooth even-textured surface.

D. Clean all exposed building components, whether existing or new of any stains or spills that occurred during construction.

E. Repairs: Repair any damage to the property caused by construction operations to condition prior to start of construction in accordance with requirements of these specifications. Fill any holes or ruts created during construction with topsoil and reestablish grass in these and any other areas where grass has been damaged during the course of the work.

F. Removal of Protection: Remove temporary protection and facilities installed for protection of the Work during construction.

G. Compliance: Comply with regulations of authorities having jurisdiction and safety standards for cleaning. Do not burn waste materials. Do not bury debris or excess materials on the Owner's property. Do not discharge volatile, harmful or dangerous materials into drainage systems. Remove waste materials from the site and dispose of in a lawful manner.

END OF SECTION 017700

SECTION 017823 - OPERATION AND MAINTENANCE DATA

PART 1 - GENERAL

1.1 RELATED DOCUMENTS

A. Drawings and general provisions of the Contract, including General and Supplementary Conditions and other Division 01 Specification Sections, apply to this Section.

1.2 SUMMARY

A. This Section includes administrative and procedural requirements for preparing operation and maintenance manuals, including the following:

1. Operation and maintenance documentation directory.
2. Emergency manuals.
3. Operation manuals for systems, subsystems, and equipment.
4. Maintenance manuals for the care and maintenance of products, materials, and finishes as well as systems and equipment.

B. Related Sections include the following:
1. Division 01 Section "Submittal Procedures" for submitting copies of submittals for operation and maintenance manuals.
2. Division 01 Section "Closeout Procedures" for submitting operation and maintenance manuals.
3. Division 01 Section "Project Record Documents" for preparing Record Drawings for operation and maintenance manuals.
4. Divisions 02 through 49 Sections for specific operation and maintenance manual requirements for the Work in those Sections.

1.3 DEFINITIONS

A. System: An organized collection of parts, equipment, or subsystems united by regular interaction.

B. Subsystem: A portion of a system with characteristics similar to a system.

1.4 SUBMITTALS

A. Initial Submittal: Submit **3** draft copies of each manual at least **15** days before requesting inspection for Substantial Completion. Include a complete operation

and maintenance directory. Architect will return **one copy** of draft and mark whether general scope and content of manual are acceptable.

B. Final Submittal: Submit two **copies** of each manual in final form at least **15** days before final inspection. Architect will return copy with comments within **15** days after final inspection.

1. Correct or modify each manual to comply with Architect's comments. Submit **3** copies of each corrected manual within **15** days of receipt of Architect's comments.

1.5 COORDINATION

A. Where operation and maintenance documentation includes information on installations by more than one factory-authorized service representative, assemble and coordinate information furnished by representatives and prepare manuals.

PART 2 - PRODUCTS

2.1 OPERATION AND MAINTENANCE DOCUMENTATION DIRECTORY

A. Organization: Include a section in the directory for each of the following:

1. List of documents.
2. List of systems.
3. List of equipment.
4. Table of contents.

B. List of Systems and Subsystems: List systems alphabetically. Include references to operation and maintenance manuals that contain information about each system.

C. List of Equipment: List equipment for each system, organized alphabetically by system. For pieces of equipment not part of system, list alphabetically in separate list.

D. Tables of Contents: Include a table of contents for each emergency, operation, and maintenance manual.

E. Identification: In the documentation directory and in each operation and maintenance manual, identify each system, subsystem, and piece of equipment with same designation used in the Contract Documents. If no designation exists, assign a designation according to ASHRAE Guideline 4, "Preparation of Operating and Maintenance Documentation for Building Systems."

2.2 MANUALS, GENERAL

A. Organization: Unless otherwise indicated, organize each manual into a separate section for each system and subsystem, and a separate section for each piece of equipment not part of a system. Each manual shall contain the following materials, in the order listed:

1. Title page.
2. Table of contents.
3. Manual contents.

B. Title Page: Enclose title page in transparent plastic sleeve. Include the following information:

1. Subject matter included in manual.
2. Name and address of Project.
3. Name and address of Owner.
4. Date of submittal.
5. Name, address, and telephone number of Contractor.
6. Name and address of Architect.
7. Cross-reference to related systems in other operation and maintenance manuals.

C. Table of Contents: List each product included in manual, identified by product name, indexed to the content of the volume, and cross-referenced to Specification Section number in Project Manual.

1. If operation or maintenance documentation requires more than one volume to accommodate data, include comprehensive table of contents for all volumes in each volume of the set.

D. Manual Contents: Organize into sets of manageable size. Arrange contents alphabetically by system, subsystem, and equipment. If possible, assemble instructions for subsystems, equipment, and components of one system into a single binder.

1. Binders: Heavy-duty, 3-ring, vinyl-covered, loose-leaf binders, in thickness necessary to accommodate contents, sized to hold 8-1/2-by-11-inch (215-by-280-mm) paper; with clear plastic sleeve on spine to hold label describing contents and with pockets inside covers to hold folded oversize sheets.

   a. If two or more binders are necessary to accommodate data of a system, organize data in each binder into groupings by subsystem and related components. Cross-reference other binders if necessary to provide essential information for proper operation or maintenance of equipment or system.

b. Identify each binder on front and spine, with printed title "OPERATION AND MAINTENANCE MANUAL," Project title or name, and subject matter of contents. Indicate volume number for multiple-volume sets.

2. Dividers: Heavy-paper dividers with plastic-covered tabs for each section. Mark each tab to indicate contents. Include typed list of products and major components of equipment included in the section on each divider, cross-referenced to Specification Section number and title of Project Manual.
3. Protective Plastic Sleeves: Transparent plastic sleeves designed to enclose diagnostic software diskettes for computerized electronic equipment.
4. Supplementary Text: Prepared on 8-1/2-by-11-inch (215-by-280-mm) white bond paper.
5. Drawings: Attach reinforced, punched binder tabs on drawings and bind with text.

   a. If oversize drawings are necessary, fold drawings to same size as text pages and use as foldouts.
   b. If drawings are too large to be used as foldouts, fold and place drawings in labeled envelopes and bind envelopes in rear of manual. At appropriate locations in manual, insert typewritten pages indicating drawing titles, descriptions of contents, and drawing locations.

2.3 EMERGENCY MANUALS

A. Content: Organize manual into a separate section for each of the following:

1. Type of emergency.
2. Emergency instructions.
3. Emergency procedures.

B. Type of Emergency: Where applicable for each type of emergency indicated below, include instructions and procedures for each system, subsystem, piece of equipment, and component:

1. Fire.
2. Flood.
3. Gas leak.
4. Water leak.
5. Power failure.
6. Water outage.
7. System, subsystem, or equipment failure.
8. Chemical release or spill.

C. Emergency Instructions: Describe and explain warnings, trouble indications, error messages, and similar codes and signals. Include responsibilities of Owner's

operating personnel for notification of Installer, supplier, and manufacturer to maintain warranties.

D. Emergency Procedures: Include the following, as applicable:

1. Instructions on stopping.
2. Shutdown instructions for each type of emergency.
3. Operating instructions for conditions outside normal operating limits.
4. Required sequences for electric or electronic systems.
5. Special operating instructions and procedures.

2.4 OPERATION MANUALS

A. Content: In addition to requirements in this Section, include operation data required in individual Specification Sections and the following information:

1. System, subsystem, and equipment descriptions.
2. Performance and design criteria if Contractor is delegated design responsibility.
3. Operating standards.
4. Operating procedures.
5. Operating logs.
6. Wiring diagrams.
7. Control diagrams.
8. Piped system diagrams.
9. Precautions against improper use.
10. License requirements including inspection and renewal dates.

B. Descriptions: Include the following:

1. Product name and model number.
2. Manufacturer's name.
3. Equipment identification with serial number of each component.
4. Equipment function.
5. Operating characteristics.
6. Limiting conditions.
7. Performance curves.
8. Engineering data and tests.
9. Complete nomenclature and number of replacement parts.

C. Operating Procedures: Include the following, as applicable:

1. Startup procedures.
2. Equipment or system break-in procedures.
3. Routine and normal operating instructions.
4. Regulation and control procedures.

5. Instructions on stopping.
6. Normal shutdown instructions.
7. Seasonal and weekend operating instructions.
8. Required sequences for electric or electronic systems.
9. Special operating instructions and procedures.

D. Systems and Equipment Controls: Describe the sequence of operation, and diagram controls as installed.

E. Piped Systems: Diagram piping as installed, and identify color-coding where required for identification.

2.5 PRODUCT MAINTENANCE MANUAL

A. Content: Organize manual into a separate section for each product, material, and finish. Include source information, product information, maintenance procedures, repair materials and sources, and warranties and bonds, as described below.

B. Source Information: List each product included in manual, identified by product name and arranged to match manual's table of contents. For each product, list name, address, and telephone number of Installer or supplier and maintenance service agent, and cross-reference Specification Section number and title in Project Manual.

C. Product Information: Include the following, as applicable:

1. Product name and model number.
2. Manufacturer's name.
3. Color, pattern, and texture.
4. Material and chemical composition.
5. Reordering information for specially manufactured products.

D. Maintenance Procedures: Include manufacturer's written recommendations and the following:

1. Inspection procedures.
2. Types of cleaning agents to be used and methods of cleaning.
3. List of cleaning agents and methods of cleaning detrimental to product.
4. Schedule for routine cleaning and maintenance.
5. Repair instructions.

E. Repair Materials and Sources: Include lists of materials and local sources of materials and related services.

F. Warranties and Bonds: Include copies of warranties and bonds and lists of circumstances and conditions that would affect validity of warranties or bonds.

1. Include procedures to follow and required notifications for warranty claims.

2.6 SYSTEMS AND EQUIPMENT MAINTENANCE MANUAL

A. Content: For each system, subsystem, and piece of equipment not part of a system, include source information, manufacturers' maintenance documentation, maintenance procedures, maintenance and service schedules, spare parts list and source information, maintenance service contracts, and warranty and bond information, as described below.

B. Source Information: List each system, subsystem, and piece of equipment included in manual, identified by product name and arranged to match manual's table of contents. For each product, list name, address, and telephone number of Installer or supplier and maintenance service agent, and cross-reference Specification Section number and title in Project Manual.

C. Manufacturers' Maintenance Documentation: Manufacturers' maintenance documentation including the following information for each component part or piece of equipment:

1. Standard printed maintenance instructions and bulletins.
2. Drawings, diagrams, and instructions required for maintenance, including disassembly and component removal, replacement, and assembly.
3. Identification and nomenclature of parts and components.
4. List of items recommended to be stocked as spare parts.

D. Maintenance Procedures: Include the following information and items that detail essential maintenance procedures:

1. Test and inspection instructions.
2. Troubleshooting guide.
3. Precautions against improper maintenance.
4. Disassembly; component removal, repair, and replacement; and reassembly instructions.
5. Aligning, adjusting, and checking instructions.
6. Demonstration and training videotape, if available.

E. Maintenance and Service Schedules: Include service and lubrication requirements, list of required lubricants for equipment, and separate schedules for preventive and routine maintenance and service with standard time allotment.

1. Scheduled Maintenance and Service: Tabulate actions for daily, weekly, monthly, quarterly, semiannual, and annual frequencies.
2. Maintenance and Service Record: Include manufacturers' forms for recording maintenance.

F. Spare Parts List and Source Information: Include lists of replacement and repair parts, with parts identified and cross-referenced to manufacturers' maintenance documentation and local sources of maintenance materials and related services.

G. Maintenance Service Contracts: Include copies of maintenance agreements with name and telephone number of service agent.

H. Warranties and Bonds: Include copies of warranties and bonds and lists of circumstances and conditions that would affect validity of warranties or bonds.

1. Include procedures to follow and required notifications for warranty claims.

PART 3 - EXECUTION

3.1 MANUAL PREPARATION

A. Operation and Maintenance Documentation Directory: Prepare a separate manual that provides an organized reference to emergency, operation, and maintenance manuals.

B. Emergency Manual: Assemble a complete set of emergency information indicating procedures for use by emergency personnel and by Owner's operating personnel for types of emergencies indicated.

C. Product Maintenance Manual: Assemble a complete set of maintenance data indicating care and maintenance of each product, material, and finish incorporated into the Work.

D. Operation and Maintenance Manuals: Assemble a complete set of operation and maintenance data indicating operation and maintenance of each system, subsystem, and piece of equipment not part of a system.

1. Engage a factory-authorized service representative to assemble and prepare information for each system, subsystem, and piece of equipment not part of a system.
2. Prepare a separate manual for each system and subsystem, in the form of an instructional manual for use by Owner's operating personnel.

E. Manufacturers' Data: Where manuals contain manufacturers' standard printed data, include only sheets pertinent to product or component installed. Mark each sheet to identify each product or component incorporated into the Work. If data include more than one item in a tabular format, identify each item using appropriate references from the Contract Documents. Identify data applicable to the Work and delete references to information not applicable.

1. Prepare supplementary text if manufacturers' standard printed data are not available and where the information is necessary for proper operation and maintenance of equipment or systems.

F. Drawings: Prepare drawings supplementing manufacturers' printed data to illustrate the relationship of component parts of equipment and systems and to illustrate control sequence and flow diagrams. Coordinate these drawings with information contained in Record Drawings to ensure correct illustration of completed installation.

1. Do not use original Project Record Documents as part of operation and maintenance manuals.
2. Comply with requirements of newly prepared Record Drawings in Division 01 Section "Project Record Documents."

G. Comply with Division 01 Section "Closeout Procedures" for schedule for submitting operation and maintenance documentation.

END OF SECTION 017823

THIS PAGE LEFT INTENTIONALLY BLANK

SECTION 017839 - PROJECT RECORD DOCUMENTS

PART 1 - GENERAL

1.1 RELATED DOCUMENTS

A. Drawings and general provisions of the Contract, including General and Supplementary Conditions and other Division 01 Specification Sections, apply to this Section.

1.2 SUMMARY

A. This Section includes administrative and procedural requirements for Project Record Documents, including the following:

1. Record Drawings.
2. Record Specifications.
3. Record Product Data.

B. Related Sections include the following:

1. Division 01 Section "Multiple Contract Summary" for coordinating Project Record Documents covering the Work of multiple contracts.
2. Division 01 Section "Closeout Procedures" for general closeout procedures.
3. Division 01 Section "Operation and Maintenance Data" for operation and maintenance manual requirements.
4. Divisions 02 through 49 Sections for specific requirements for Project Record Documents of the Work in those Sections.

1.3 SUBMITTALS

A. Record Drawings: Comply with the following:
1. Number of Copies: Submit copies of Record Drawings as follows:

a. Initial Submittal: Submit one set of plots from corrected Record CAD Drawings and one set of marked-up Record Prints. Architect will initial and date each plot and mark whether general scope of changes, additional information recorded, and quality of drafting are acceptable. Architect will return plots and prints for organizing into sets, printing, binding, and final submittal.

b. Final Submittal: Submit one set of marked-up Record Prints, one set of Record CAD Drawing files, one set of Record CAD Drawing plots, and three copies printed from record plots. Plot and print each Drawing, whether or not changes and additional information were recorded.

1) Electronic Media: CD-R.

B. Record Specifications: Submit one copy of Project's Specifications, including addenda and contract modifications.

C. Record Product Data: Submit one copy of each Product Data submittal.

1. Where Record Product Data is required as part of operation and maintenance manuals, submit marked-up Product Data as an insert in manual instead of submittal as Record Product Data.

PART 2 - PRODUCTS

2.1 RECORD DRAWINGS

A. Record Prints: Maintain one set of blue- or black-line white prints of the Contract Drawings and Shop Drawings.

1. Preparation: Mark Record Prints to show the actual installation where installation varies from that shown originally. Require individual or entity who obtained record data, whether individual or entity is Installer, subcontractor, or similar entity, to prepare the marked-up Record Prints.

a. Give particular attention to information on concealed elements that would be difficult to identify or measure and record later.
b. Accurately record information in an understandable drawing technique.
c. Record data as soon as possible after obtaining it. Record and check the markup before enclosing concealed installations.

2. Content: Types of items requiring marking include, but are not limited to, the following:

a. Dimensional changes to Drawings.
b. Revisions to details shown on Drawings.
c. Depths of foundations below first floor.
d. Locations and depths of underground utilities.
e. Revisions to routing of piping and conduits.
f. Revisions to electrical circuitry.
g. Actual equipment locations.
h. Duct size and routing.

i. Locations of concealed internal utilities.
j. Changes made by Change Order or Construction Change Directive.
k. Changes made following Architect's written orders.
l. Details not on the original Contract Drawings.
m. Field records for variable and concealed conditions.
n. Record information on the Work that is shown only schematically.

3. Mark the Contract Drawings or Shop Drawings, whichever is most capable of showing actual physical conditions, completely and accurately. If Shop Drawings are marked, show cross-reference on the Contract Drawings.
4. Mark record sets with erasable, red-colored pencil. Use other colors to distinguish between changes for different categories of the Work at same location.
5. Mark important additional information that was either shown schematically or omitted from original Drawings.
6. Note Construction Change Directive numbers, alternate numbers, Change Order numbers, and similar identification, where applicable.

B. Record Transparencies: Immediately before inspection for Certificate of Substantial Completion, review marked-up Record Prints with Architect the Owner's Representative When authorized, prepare a full set of corrected transparencies of the Contract Drawings and Shop Drawings.

1. Incorporate changes and additional information previously marked on Record Prints. Erase, redraw, and add details and notations where applicable.
2. Refer instances of uncertainty to Architect for resolution.
3. Owner will furnish Contractor one set of transparencies of the Contract Drawings for use in recording information.
4. Print the Contract Drawings and Shop Drawings for use as Record Transparencies. Architect will make the Contract Drawings available to Contractor's print shop.

C. Record CAD Drawings: Immediately before inspection for Certificate of Substantial Completion, review marked-up Record Prints with Architect When authorized, prepare a full set of corrected CAD Drawings of the Contract Drawings, as follows:

1. Format: Same CAD program, version, and operating system as the original Contract Drawings.
2. Format**:** DWG Version operating in Microsoft Windows operating system.
3. Incorporate changes and additional information previously marked on Record Prints. Delete, redraw, and add details and notations where applicable.
4. Refer instances of uncertainty to Architect for resolution.
5. The Owner will furnish Contractor one set of CAD Drawings of the Contract Drawings for use in recording information.

a. Architect makes no representations as to the accuracy or completeness of CAD Drawings as they relate to the Contract Drawings.

b. CAD Software Program: The Contract Drawings are available in AutoCad 2011.

D. Newly Prepared Record Drawings: Prepare new Drawings instead of preparing Record Drawings where Architect determines that neither the original Contract Drawings nor Shop Drawings are suitable to show actual installation.

1. New Drawings may be required when a Change Order is issued as a result of accepting an alternate, substitution, or other modification.
2. Consult Architect for proper scale and scope of detailing and notations required to record the actual physical installation and its relation to other construction. Integrate newly prepared Record Drawings into Record Drawing sets; comply with procedures for formatting, organizing, copying, binding, and submitting.

E. Format: Identify and date each Record Drawing; include the designation "PROJECT RECORD DRAWING" in a prominent location.

1. Record Prints: Organize Record Prints and newly prepared Record Drawings into manageable sets. Bind each set with durable paper cover sheets. Include identification on cover sheets.
2. Record Transparencies: Organize into unbound sets matching Record Prints. Place transparencies in durable tube-type drawing containers with end caps. Mark end cap of each container with identification. If container does not include a complete set, identify Drawings included.
3. Record CAD Drawings: Organize CAD information into separate electronic files that correspond to each sheet of the Contract Drawings. Name each file with the sheet identification. Include identification in each CAD file.
4. Identification: As follows:

a. Project name.
b. Date.
c. Designation "PROJECT RECORD DRAWINGS."
d. Name of Architect.
e. Name of Contractor.

2.2 RECORD SPECIFICATIONS

A. Preparation: Mark Specifications to indicate the actual product installation where installation varies from that indicated in Specifications, addenda, and contract modifications.

1. Give particular attention to information on concealed products and installations that cannot be readily identified and recorded later.

2. Mark copy with the proprietary name and model number of products, materials, and equipment furnished, including substitutions and product options selected.
3. Record the name of manufacturer, supplier, Installer, and other information necessary to provide a record of selections made.
4. For each principal product, indicate whether Record Product Data has been submitted in operation and maintenance manuals instead of submitted as Record Product Data.
5. Note related Change Orders and Record Drawings where applicable.

2.3 RECORD PRODUCT DATA

A. Preparation: Mark Product Data to indicate the actual product installation where installation varies substantially from that indicated in Product Data submittal.

1. Give particular attention to information on concealed products and installations that cannot be readily identified and recorded later.
2. Include significant changes in the product delivered to Project site and changes in manufacturer's written instructions for installation.
3. Note related Change Orders, Record Specifications, and Record Drawings where applicable.

2.4 MISCELLANEOUS RECORD SUBMITTALS

A. Assemble miscellaneous records required by other Specification Sections for miscellaneous record keeping and submittal in connection with actual performance of the Work. Bind or file miscellaneous records and identify each, ready for continued use and reference.

PART 3 - EXECUTION

3.1 RECORDING AND MAINTENANCE

A. Recording: Maintain one copy of each submittal during the construction period for Project Record Document purposes. Post changes and modifications to Project Record Documents as they occur; do not wait until the end of Project.

B. Maintenance of Record Documents and Samples: Store Record Documents and Samples in the field office apart from the Contract Documents used for construction. Do not use Project Record Documents for construction purposes. Maintain Record Documents in good order and in a clean, dry, legible condition, protected from deterioration and loss. Provide access to Project Record Documents for Architect's reference during normal working hours.

END OF SECTION 017839

SECTION 019100 - SPECIAL INSPECTIONS

PART 1 GENERAL

1.1 SECTION INCLUDES

A. Special inspections for earthwork, concrete, masonry and structural steel.

1.2 REFERENCES

A. 2009 International Building Code (IBC)
B. Virginia Uniform Statewide Building Code

1.3 SUBMITTALS

A. Submittals required for special inspections are included in the following specification sections:

1. Concrete, including sub-grade preparation.
2. Masonry.
3. Structural Steel.

1.4 TESTING AGENCIES AND SPECIAL INSPECTOR.

A. Except where noted otherwise, the Owner will retain an independent testing agency to complete the testing where indicated in the specifications.

1.5 STATEMENT OF SPECIAL INSPECTIONS:

A. Initial Submittal: The statement of special inspections is required by the International Building Code to be submitted by the permit applicant prior to obtaining building permit. Contractor shall obtain a signed copy of the statement of special inspection from the Structural Engineer of Record to be submitted to the City Building Official for review.

B. Interim Submittals: Special inspector will submit quarterly interim submittals to the County Building Official as required by the IBC. Interim submittals will note which items have been completed and note any deficiencies.

C. Final Submittal: At the completion of the special inspections, and after all discrepancies noted have been corrected, the special inspector will submittal a final report of special inspections to the City Building Official.

1.6 PAYMENT FOR ADDITIONAL SERVICES:

1.6.1 DISCREPANCIES: Contractor shall correct any discrepancies or non-conformance to the specified requirements identified during special inspections.

A. RETESTING: Retesting required because of non-conformance to specified requirements shall be performed by the Owner's testing agency. Payment for retesting will be charged to the Contractor.

END OF SECTION 019100

HAMPTON ROADS AREA STATEMENT OF SPECIAL INSPECTIONS

PROJECT
Grafton Bethel Elementary School
Partial Roof & HVAC Replacement, Phase III
410 Lakeside Drive
Yorktown, VA 23692

PERMIT APPLICANT

PRIMARY RDP OF RECORD
Richard S. Corner, AIA
Hudson + Associates, Architects PLLC
120 West Queens Way, Suite 201
Hampton, VA 23669
757-722-1964

STRUCTURAL ENGINEER OF RECORD
Kevin M. Roomsburg, PE
NRW Engineering, PC
748 Lord Dunmore Dr., Suite 101
Virginia Beach, VA 23464
757-474-0612

This Statement of Special Inspections is submitted as a condition for permit issuance in accordance with the International Building Code (IBC) as stated in the Virginia Uniform Statewide Building Code (USBC). It includes a Schedule of Special Inspections applicable to this project as well as the name of the Special Inspector, and the identity of other testing laboratories or agencies intended to be retained for conducting these inspections or tests.

The Special Inspector shall keep records of all inspections, and shall furnish inspection reports to the Building Official, appropriate Registered Design Professional(s) (RDP(s)), Owner, and Contractor. All discrepancies shall be brought to the immediate attention of the Contractor for correction. If the discrepancies are not corrected, the discrepancies shall be brought to the attention of the Building Official and appropriate RDP(s). Interim reports shall be submitted to the Building Official, Owner, Contractor, and the appropriate RDP(s) according to the *Hampton Roads Regional Special Inspection Guidelines and Procedures.*

Jobsite safety is solely the responsibility of the contractor. Materials and activities to be inspected are not to include the contractor's equipment and methods used to erect or install the materials listed. **All fees/costs related to the performance of Special Inspections shall be the responsibility of the Owner. Additionally, the undersigned (RDP or SER) are only acknowledging that the items enumerated on the Schedule of Special Inspections are consistent with the required design elements, the applicable sections of the Uniform Statewide Building Code, and their area of expertise.**

REVIEW, AUTHORIZATION & ACCEPTANCE

Permit Applicant (*If not Owner*):
Signature / date: _____
Print Name: _____

Owner's Authorization (*If other than applicant*):
Signature / date: _____
Printed Name: _____

Primary RDP of Record:
(Review and Acceptance of Schedule)
Signature / date: _____
Print Name: Richard S. Corner, AIA 2-14-2014

SER of Record:
(Review and Acceptance of Schedule)
Signature / date: _____ 2-14-14
Printed Name: Kevin M. Roomsburg, PE

Building Official's Acceptance:
Signature / date: _____
Printed Name: _____

SCHEDULE OF SI PREPARED BY:

COMMONWEALTH OF VIRGINIA
KEVIN M. ROOMSBURG
No. 17101
2-14-14
PROFESSIONAL ENGINEER

Virginia RDP Seal of SI Preparer
Kevin M. Roomsburg
Printed Name of the Preparer of the Schedule (on line above)

Special Inspector:
Signature / date: _____ 2-14-14
Printed Name: Kevin M. Roomsburg, PE

SI Company Name: NRW Engineering. P.C.

SCHEDULE OF SPECIAL INSPECTIONS

MATERIAL/ACTIVITY	TYPE OF INSPECTION	APPLICABLE TO THIS PROJECT			
		Y/C/P/N	EXTENT/REFERENCE	AGENT	COMPLETED
GENERAL					
Pre-construction conference	Meeting with parties listed in Section 6 of HRRSIGP to discuss Special Inspection procedures	Y	Scheduled by SI with the Contractor prior to commencement of work	1/2	
EARTHWORK					
Site preparation (building)	Field testing and inspection	N	Field Review: IBC 1704.7		
Fill material (building)	Review submittals, field testing and inspection	N	Laboratory Testing: Field Review: IBC 1704.7		
Fill compaction (building)	In-place density tests	N	Laboratory Testing: Field Review: IBC 1704.7		
Foundation sub-grade	Field inspection of foundation subgrade prior to placement of concrete	N	Field Review: IBC 1704.7		
PILE/DRILLED PIER FOUNDATIONS					
Materials	Review product, sizes and lengths	N	IBC 1704.8/Table 1704.8		
Test piles	Monitor driving of test piles	N	IBC 1704.8/Table 1704.8		
Pile/drilled pier installation	Monitor drilling, placement, driving of piles, including cut off and tip elevations	N	IBC 1704.8/Table 1704.8, Table 1704.9		
Pile load test	Monitor pile load test	N	IBC 1704.8/Table 1704.8		
CONCRETE					
Materials	Review product supplied versus certificates of compliance and mix design	N	Submittal & Field Review: IBC 1704.4.1, ACI 318: Ch. 4 and 5, IBC 1904-2.2, 1913.2, 1913.3		
Installation of reinforcing steel, including prestress tendons and anchor bolts as well as welding	Field inspection of placement	N	Field Review: ACI 318:3.5, 3.5.2 & Chapter 7, AWSD1.4; IBC 1704.4,1911.5, 1913.4		
Formwork installation	Field inspection	N	Field Review: ACI 318:6.1.1, IBC 1704.4		
Concreting operations & placement	Field inspection of placement/sampling	N	Field Review: ACI 318:5.6, 5.8,5.9-10; ASTM C172, C31; IBC 1704.4, 1913.6, 1913.7,1913.8, 1913.10		
Concrete curing	Field inspection of curing process	N	Field Review: ACI 318: 5.11-13, IBC 1704.4, 1913.9		
Concrete strength	Evaluation of concrete strength	N	Laboratory Testing: ACI 318; 6.2; IBC 1704.4		
Application of forces for prestressed concrete	Field inspection	N	Field Review: ACI 318: 18.20		
Grouting of prestress tendons	Field inspection	N	Field Review: ACI 318: 18.18.4		

MATERIAL/ACTIVITY	TYPE OF INSPECTION	APPLICABLE TO THIS PROJECT			
		Y/C/P/N	EXTENT/REFERENCE	AGENT	COMPLETED
PRECAST CONCRETE					
Verify fabrication/quality control procedures	In-plant inspection of fabrication/quality control procedures**	N	IBC 1704.2		
Erection and installation	Review submittals and as-built assemblies; Field inspection of in-pace precast	N	ACI 318: Ch. 16		
MASONRY (Level: 1; Based upon Occupancy Category II)					
Materials	Review of products supplied versus certificate of compliance and material submitted	N	Submittal & Field Review, ACI 530.1; ASCE 6; TMS602; IBC1704.5, 1708		
Strength	Testing/review of strength	N	Laboratory Testing; Submittal & Field Review; ACI530.1; ASCE6; TMS 602;IBC1704.5, 2105.2.2, 2105.3		
Mortar and grout	Inspection of proportioning, mixing and placement.	N	Field Review IBC 1704.5 ACI 530.1;ASCE 6; TMS 602		
Reinforcement, prestress, tendons, and connections	Inspect condition, size, location and spacing	N	Field Review IBC 1704.5 ACI 530.1;ASCE 5; ASCE 6; TMS 402, 602		
Protection	Inspect procedures for protection during cold and hot weather	N	Field Review, IBC 1704.5, 2104.3, 2104.4; ACI 530.1; ASCE 6; TMS 602		
Anchorage	Inspection of anchorages	N	Field Review, ACI 530.1; ASCE 5, ASCE 6, TMS 402; TMS 602; IBC 1704.5		
Masonry installation	Inspection of placement of masonry and joints	N	Field Review, ACI 530.1; ASCE 6; TMS 602; IBC 1704.5		
STRUCTURAL STEEL					
Verify fabrication/quality control procedures	In-plant inspection of fabrication/quality control procedures**	N	IBC 1704.2		
Bolts, nuts, washers – materials	Material identification markings Review of certificate of compliance	Y	Submittal & Field Review, IBC1704.3; ASTM; AISC 360, Section A3.3	1	
Bolts, nuts, washers – installation	Inspection of in-place high-strength bolts, bearing type, and slip critical connections.	Y	Submittal & Field Review, IBC 1704.3.3, AISC 360 Section M2.5	2	
Structural steel – materials	Material identification markings and Review of Certificate of Compliance	Y	Submittal & Field Review, IBC 1704.3, 1708.4, ASTM A6, A568	1	
Structural steel details- installation	Inspection of member locations, structural details for bracing, connections, stiffening	Y	Submittal & Field Review, IBC 1704.3.2	1/2	
Weld filler materials & welder certification	Review of identification markings, certificate of compliance, and welder certifications.	Y	Submittal & Field Review, AISC 360 A3.5	1	
Welds	Inspection and testing of welds	Y	Field Review, IBC 1704.3.1, AWS, D1.1, D1.3	2	
WOOD					
Verify fabrication/quality control procedures	In-plant inspection of fabrication/quality control procedures**	N	IBC 1704.2, 1704.6		

MATERIAL/ACTIVITY	TYPE OF INSPECTION	APPLICABLE TO THIS PROJECT			
		Y/C/P/N	EXTENT/REFERENCE	AGENT	COMPLETED
WOOD (Cont'd)					
High-Load Diaphragms- Installation	Review submittal and as-built assemblies: Inspection of sheathing, framing size, nail and staple diameter and length, number of fastener lines, and fastener spacing.	N	IBC 1704.1, 1704.6.1		
SPRAYED CEMENTITIOUS AND MINERAL FIBER FIRE RESISTIVE MATERIALS					
Structural member surface conditions	Field review of surface conditions prior to application	N	AWCI 12-B; IBC 1704.10		
Application/thickness	Field review of application operations and thickness	N	AWCI 12-B; IBC 1704.10		
Mastic & Intumescent Fire Resistant Coating	Field review of application operations and thickness	N	Laboratory Testing; AWCI 12-B; IBC 1704.11		
EXTERIOR INSULATION AND FINISH SYSTEMS					
Application	Field review of application/installation	N	IBC 1704.12		
SPECIAL CASES					
Alternative Materials and Systems	As requested by Building Official, review system & installation	N	IBC 1704.13		
MAIN WIND FORCE RESISTING SYSTEM					
Wind requirements	Review of the system components and installation	N	IBC 1609.1.2, 1705.4, 1705.4.1, 1705.4.2, 1709		
SEISMIC FORCE RESISTING SYSTEMS (Based on Seismic Design Category B)					
Seismic requirements	Review of the designated seismic systems and seismic force resistance systems	N	IBC 1613, 1705.3, 1705.3.1, 1707, 1708, 1709, ASCE 7		
SMOKE CONTROL					
Special inspection of smoke control systems	Leakage testing and recording of device location, pressure difference testing, flow measurement and detection, and control verification.	N	IBC 1704.14, 1704.14.1, 1704.14.2		

INSPECTION AGENTS	FIRM	ADDRESS	TELEPHONE
1. Special Inspector:	NRW Engineering, P.C.	748 Lord Dunmore Dr. Suite 101, Virginia Beach, VA 23464	757-474-0612
2. Materials and Testing Laboratory	GET Solutions, INC	204 Grayson Road, Suite B, Virginia Beach, VA 23462	757-518-1703
3. Special Inspector Smoke Control System:			
4. (Additional Agents?)			

*The Qualifications of the Special Inspector and Testing Laboratories are subject to the approval of the Building Official (ASTM E329).
** Inspection of quality control procedures required only if fabricator is not regularly inspected by an independent inspection agency.

SECTION 024119 - SELECTIVE DEMOLITION

PART 1 - GENERAL:

1.1 RELATED DOCUMENTS:

A. Drawings and general provisions of Contract, including General and Supplementary Conditions and Division-1 Specification sections, apply to work of this section.

1.2 DESCRIPTION OF WORK:

A. Extent of selective demolition work is indicated on drawings.

1.3 JOB CONDITIONS:

A. Occupancy: Owner will be occupying the building immediately adjacent to areas of selective demolition. The project is scheduled, so that students will not be in the school during working hours. However, teachers and administrative staff will be working in the building. Conduct selective demolition work in manner that will minimize need for disruption of Owner's normal operations. Provide minimum of 72 hours advance notice to Owner of demolition activities, which will severely impact Owner's normal operations.

B. Condition of Structures: Owner assumes no responsibility for actual condition of items or structures to be demolished.

C. Protections: Provide temporary barricades and other forms of protection as required to protect Owner's personnel and general public from injury due to selective demolition work.

1. Provide protective measures as required to provide free and safe passage of Owner's personnel and general public to and from occupied portions of building. Advise the Owner which portions of the building will be worked on the next day so that the Owner can coordinate their activities with the work in and around the building.

2. Protect from damage existing finish work that is to remain in place and becomes exposed during demolition operations. Minimize traffic on the roof and protect paths to and from equipment and the roof surrounding work areas to protect the roof to remain.

3. Protect floors with suitable coverings when necessary.

4. Provide temporary weather protection during interval between demolition and removal of existing construction on exterior surfaces, and installation

of new construction to insure that no water leakage or damage occurs to structure or interior areas of existing building.

5. Remove protections at completion of work.

D. Damages: Promptly repair damages caused to adjacent facilities by demolition work at no cost to Owner.

E. Traffic: Conduct selective demolition operations and debris removal in a manner to ensure minimum interference with roads, streets, walks, and other adjacent occupied or used facilities.

1. Do not close, block or otherwise obstruct streets, walks or other occupied or used facilities without written permission from authorities having jurisdiction. Provide alternate routes around closed or obstructed traffic ways if required by governing regulations.

F. Access to the work areas of this contract shall not include foot traffic across existing roof areas not in this Contract or completed portions of the roof.

G. Flame Cutting: Do not use cutting torches for removal until work area is cleared of flammable materials and spaces below are cleared of personnel. At concealed spaces, such as interior of ducts and pipes, verify condition of hidden space before starting flame-cutting operations. Maintain portable fire suppression devices during flame-cutting operations.

H. Do not interrupt utilities serving occupied or used facilities, except when authorized in writing by authorities having jurisdiction.

I. Maintain fire protection services during selective demolition operations.

J. Environmental Controls: Use water sprinkling, temporary enclosures, and other suitable methods to limit dust and dirt rising and scattering in air to lowest practical level. Comply with governing regulations pertaining to environmental protection.

PART 2 - PRODUCTS (Not Applicable).

PART 3 - EXECUTION

3.1 INSPECTION:

A. Prior to commencement of selective demolition work, inspect areas in which work will be performed. Photograph existing conditions to structure surfaces, equipment or to surrounding properties which could be misconstrued as damage resulting from selective demolition work; file with Owner's Representative prior to starting work.

B. Cover and protect furniture, equipment and fixtures to remain from soiling or damage when demolition work is performed in rooms or areas from which such items have not been removed.

C. Erect and maintain dust-proof partitions and closures as required to prevent spread of dust or fumes to occupied portions of the building.

D. Where selective demolition occurs immediately adjacent to occupied portions of the building, construct dust-proof partitions of minimum 3 5/8"" studs, 1/2" drywall (joints taped) on occupied side, 1/2" fire-retardant plywood on demolition side, and fill partition cavity with sound-deadening insulation.

E. Provide weatherproof closures for exterior openings resulting from demolition work, but do not remove more than can be protected that same day.

3.2 DEMOLITION:

A. Perform selective demolition work in a systematic manner. Use such methods as required to complete work indicated on Drawings in accordance with demolition schedule and governing regulations.

B. Provide services for effective air and water pollution controls as required by local authorities having jurisdiction.

C. Do not overload the roof structure when moving rooftop equipment and during demolition operations. If necessary, obtain structural engineering services to assure that the work can be accomplished without danger to structural components.

D. If unanticipated mechanical, electrical or structural elements which conflict with intended function or design are encountered, investigate and measure both nature and extent of the conflict. Submit report to Owner's Representative in written, accurate detail. Pending receipt of directive from Owner's Representative rearrange selective demolition schedule as necessary to continue overall job progress without delay.

3.3 UTILITY SERVICES AND MECHANICAL/ELECTRICAL SYSTEMS

A. Existing Services/Systems to Remain: Maintain services/systems indicated to remain and protect them against damage.

1. Comply with requirements for existing services/systems interruptions specified in Section 011000 "Summary."

B. Existing Services/Systems to Be Removed, Relocated, or Abandoned: Locate, identify, disconnect, and seal or cap off indicated utility services and mechanical/electrical systems serving areas to be selectively demolished.

1. Owner will arrange to shut off indicated services/systems when requested by Contractor.
2. Arrange to shut off indicated utilities with utility companies.
3. If services/systems are required to be removed, relocated, or abandoned, provide temporary services/systems that bypass area of selective demolition and that maintain continuity of services/systems to other parts of building.
4. Disconnect, demolish, and remove fire-suppression systems, plumbing, and HVAC systems, equipment, and components indicated to be removed.

a. Piping to Be Removed: Remove portion of piping indicated to be removed and cap or plug remaining piping with same or compatible piping material.
b. Piping to Be Abandoned in Place: Drain piping and cap or plug piping with same or compatible piping material.
c. Equipment to Be Removed: Disconnect and cap services and remove equipment.
d. Equipment to Be Removed and Reinstalled: Disconnect and cap services and remove, clean, and store equipment; when appropriate, reinstall, reconnect, and make equipment operational.
e. Equipment to Be Removed and Salvaged: Disconnect and cap services and remove equipment and deliver to Owner.
f. Ducts to Be Removed: Remove portion of ducts indicated to be removed and plug remaining ducts with same or compatible ductwork material.
g. Ducts to Be Abandoned in Place: Cap or plug ducts with same or compatible ductwork material.

C. Refrigerant: Remove refrigerant from mechanical and refrigeration equipment to be selectively demolished according to 40 CFR 82 and regulations of authorities having jurisdiction.

3.4 REMOVAL OF EXISTING ROOFING:

A. At roof areas to be repaired or new roof top equipment installed remove the existing roofing system as indicated on the drawings. Removal shall include, but not be limited to roof insulation, wood blocking, flashings (unless otherwise noted) at edge flashings, roof top equipment and roof accessories and all other items incorporated therein. Contractor must repair, at his expense, any roof deck that he damages.

B. **Remove only as much roofing as can be replaced with a completely new roof system and made watertight in a single day.**

C. Clean all roof deck surfaces of loose material and other impediments that will be detrimental to application of the new materials.

D. Damaged deck shall be repaired before reroofing, in compliance with other requirements of these specifications.

3.5 REMOVAL OF EXISTING CEILINGS

A. Carefully remove existing ceilings throughout areas designated to receive new ceilings. Do not damage adjacent surfaces. Contractor may retain existing ceiling edge trim at walls where new ceiling height matches pre-existing ceiling height.

B. Coordinate with removal and reinstallation of specific ceiling-mounted components by others, including:

1. Fire alarm detection and notification devices
2. Building automation/security system devices (including occupant sensors)
3. Audio-visual components (including ceiling-mounted projectors, projection screens and local speakers).
4. Public address system speakers

C. The Contractor shall carefully remove existing ceiling panels from existing grid, and shall salvage as many existing ceiling panels as can be collected in reusable, undamaged condition. Stockpile salvaged panels in air conditioned space, and protect until reinstalled.

3.6 MATERIALS TO BE REMOVED AND REINSTALLED

A. Carefully remove and store rooftop equipment for reinstallation where identified on the drawings unless indicated to be eliminated. Recently-installed rooftop HVAC equipment at Area 'B,' including make-up air unit, heat pump condensing units, gravity vents and exhaust fans, were placed under a previous phase of work in a manner that does not require their removal in order to accomplish re-roofing. These conditions have been specifically detailed on the drawings.

3.7 EXISTING ITEMS TO BE SALVAGED AND TURNED OVER TO OWNER

A. Carefully remove and turn over to the Owner the following item(s):

1. Existing HVAC boiler, pump, VFD, expansion tank and shot feeder in the Main Mechanical Room.

3.8 DISPOSAL OF DEMOLISHED MATERIALS

A. All debris from roof demolition operations shall be removed from the roof immediately and deposited into trucks or dumpsters and hauled away from the site and properly recycled or disposed of at the Contractor's expense.

B. Dumpsters or trucks shall be removed from the premises when they are full.

C. Contractor shall periodically clean up the site, building and roof and be generally responsible for keeping the site, building and roof in a safe, neat and orderly condition.

D. If hazardous materials are encountered during demolition operations, comply with applicable regulations, laws, and ordinances concerning removal, handling, and protection against exposure or environmental pollution.

1. Existing lighting throughout many areas to be removed contains fluorescent tube lamps. These tubes shall be assumed to contain mercury vapor. Other lighting fixtures to be removed may be equipped with lamps containing halogens or other harmful compounds. All existing lighting fixture lamps shall be removed, handled and disposed of in a lawful manner preventing breakage and release of vapors on school property.

E. Burning of removed materials is not permitted on project site.

F. Recycling: The Contractor shall segregate all waste prior to disposal, and is encouraged to recycle demolished materials to the greatest practical extent.

3.9 CLEANUP AND REPAIR

A. General: Upon completion of demolition work, remove tools, equipment, and demolished materials from site. Remove protection and leave interior areas vacuum-clean from any dust or debris that may have entered the building as a result of roofing operations, in time for school the next day.

B. Repair demolition performed in excess of that required. Return elements of construction (and surfaces to remain) to condition existing prior to start operations. Repair adjacent construction or surfaces soiled or damaged by selective demolition work.

END OF SECTION 024119

SECTION 033000- CAST-IN-PLACE CONCRETE

PART 1 - GENERAL

1.1 SUMMARY

A. This Section specifies cast-in place concrete, including formwork, reinforcement, concrete materials, mixture design, placement procedures, and finishes, for the following:

1. Floor slab patches.
2. Equipment curbs.
3. Sidewalk repairs.

1.2 DEFINITIONS

A. Cementitious Materials: Portland cement alone or in combination with one or more of the following: blended hydraulic cement, fly ash and other pozzolans, ground granulated blast-furnace slag, and silica fume; subject to compliance with requirements.

1.3 SUBMITTALS

A. Product Data: For each type of product indicated.

B. Design Mixtures: For each concrete mixture. Submit alternate design mixtures when characteristics of materials, Project conditions, weather, test results, or other circumstances warrant adjustments.

1. Indicate amounts of mixing water to be withheld for later addition at Project site.

C. Steel Reinforcement Shop Drawings: Placing drawings that detail fabrication, bending, and placement. Include bar sizes, lengths, material, grade, bar schedules, stirrup spacing, bent bar diagrams, bar arrangement, splices and laps, mechanical connections, tie spacing, hoop spacing, and supports for concrete reinforcement.

D. Material Certificates: For each of the following, signed by manufacturers:

1. Cementitious materials.
2. Admixtures.

3. Curing compounds.
4. Bonding agents.
5. Adhesives.
6. Vapor retarders.
7. Joint-filler strips.

E. Field quality-control test and inspection reports.

F. Minutes of pre-installation conference.

1.4 QUALITY ASSURANCE

A. Installer Qualifications: A qualified installer who employs on Project personnel qualified as ACI-certified Flatwork Technician and Finisher and a supervisor who is an ACI-certified Concrete Flatwork Technician.

B. Manufacturer Qualifications: A firm experienced in manufacturing ready-mixed concrete products and that complies with ASTM C 94/C 94M requirements for production facilities and equipment.

C. Testing Agency Qualifications: An independent agency, acceptable to authorities having jurisdiction, qualified according to ASTM C 1077 and ASTM E 329 for testing indicated, as documented according to ASTM E 548.

1. Personnel conducting field tests shall be qualified as ACI Concrete Field Testing Technician, Grade 1, according to ACI CP-01 or an equivalent certification program.

D. Source Limitations: Obtain each type or class of cementitious material of the same brand from the same manufacturer's plant, obtain aggregate from one source, and obtain admixtures through one source from a single manufacturer.

E. ACI Publications: Comply with the following unless modified by requirements in the Contract Documents:

1. ACI 301, "Specification for Structural Concrete," Sections 1 through 5
2. ACI 117, "Specifications for Tolerances for Concrete Construction and Materials."

F. Concrete Testing Service: Engage a qualified independent testing agency to perform material evaluation tests and to design concrete mixtures.

G. Preinstallation Conference: Conduct conference at Project site to comply with requirements in Division 01 Section "Project Management and Coordination."

1. Before submitting design mixtures, review concrete design mixture and examine procedures for ensuring quality of concrete materials. Require representatives of each entity directly concerned with cast-in-place concrete to attend, including the following:

   a. Contractor's superintendent.
   b. Independent testing agency responsible for concrete design mixtures.
   c. Ready-mix concrete manufacturer.
   d. Concrete subcontractor.

2. Review special inspection and testing and inspecting agency procedures for field quality control, concrete finishes and finishing, cold- and hot-weather concreting procedures curing procedures, construction contraction and isolation joints, and joint-filler strips, forms and form removal limitations, vapor-retarder installation, anchor rod and anchorage device installation tolerances steel reinforcement installation, floor and slab flatness and levelness measurement, and concrete protection.

1.5 DELIVERY, STORAGE, AND HANDLING

A. Steel Reinforcement: Deliver, store, and handle steel reinforcement to prevent bending and damage

PART 2 - PRODUCTS

2.1 MANUFACTURERS

A. In other Part 2 articles where titles below introduce lists, the following requirements apply to product selection:

1. Available Manufacturers: Subject to compliance with requirements, manufacturers offering products that may be incorporated into the Work include, but are not limited to, manufacturers specified.

2.2 STEEL REINFORCEMENT

A. Reinforcing Bars: ASTM A 615/A 615M, Grade 60 (Grade 420), deformed.

B. Plain-Steel Wire: ASTM A 82, as drawn

C. Plain-Steel Welded Wire Reinforcement: ASTM A 185, plain, fabricated from as-drawn steel wire into flat sheets.

2.3 REINFORCEMENT ACCESSORIES

A. Joint Dowel Bars: ASTM A 615/A 615M, Grade 60 (Grade 420), plain-steel bars, cut bars true to length with ends square and free of burrs.

B. Bar Supports: Bolsters, chairs, spacers, and other devices for spacing, supporting, and fastening reinforcing bars and welded wire reinforcement in place. Manufacture bar supports from steel wire, plastic, or precast concrete according to CRSI's "Manual of Standard Practice," of greater compressive strength than concrete and as follows:

1. For concrete surfaces exposed to view where legs of wire bar supports contact forms, use CRSI Class 1 plastic-protected steel wire or CRSI Class 2 stainless-steel bar supports.

2.4 CONCRETE MATERIALS

A. Cementitious Material: Use the following cementitious materials, of the same type, brand, and source, throughout Project:

1. Portland Cement: ASTM C 150, Type I/II gray Supplement with the following Select supplementary cementing materials from two subparagraphs below if permitted. Ready-mix concrete manufacturer blends these materials with portland cement. Fly ash, slag, or pozzolanic materials may slow rate of concrete strengthening and affect color uniformity. Availability of Class F fly ash predominates over Class C fly ash.

a. Fly Ash: ASTM C 618, Class F.
b. Ground Granulated Blast-Furnace Slag: ASTM C 989, Grade 100 or 120.

B. Normal-Weight Aggregates: ASTM C 33, Class 3S coarse aggregate or better, graded. Provide aggregates from a single source with documented service record data of at least 10 years' satisfactory service in similar applications and service conditions using similar aggregates and cementitious materials.

1. Maximum Coarse-Aggregate Size: 1-1/2 inches (38 mm) nominal.
2. Fine Aggregate: Free of materials with deleterious reactivity to alkali in cement.

C. Water: ASTM C 94/C 94M and potable.

2.5 ADMIXTURES

A. Chemical Admixtures: Provide admixtures certified by manufacturer to be compatible with other admixtures and that will not contribute water-soluble

chloride ions exceeding those permitted in hardened concrete. Do not use calcium chloride or admixtures containing calcium chloride.

1. Water-Reducing Admixture: ASTM C 494/C 494M, Type A.
2. Retarding Admixture: ASTM C 494/C 494M, Type B.
3. Water-Reducing and Retarding Admixture: ASTM C 494/C 494M, Type D.
4. High-Range, Water-Reducing Admixture: ASTM C 494/C 494M, Type F.
5.

2.6 VAPOR RETARDERS

A. Plastic Vapor Retarder: ASTM E 1745, Class C, or polyethylene sheet, ASTM D 4397, not less than 10 mils (0.25 mm) thick. Include manufacturer's recommended adhesive or pressure-sensitive joint tape.

1. Available Products:

a. Stego Industries, LLC; Stego Wrap, 10 mils.

B. Granular Fill: Clean mixture of crushed stone or crushed or uncrushed gravel; ASTM D 448, Size 57, with 100 percent passing a 1-1/2-inch (37.5-mm) sieve and 0 to 5 percent passing a No. 8 (2.36-mm) sieve.

2.7 CURING MATERIALS

A. Evaporation Retarder: Waterborne, monomolecular film forming, manufactured for application to fresh concrete.

1. Available Products:

a. Axim Concrete Technologies; Cimfilm.
b. Burke by Edoco; BurkeFilm.
c. ChemMasters; Spray-Film.
d. Conspec Marketing & Manufacturing Co., Inc., a Dayton Superior Company; Aquafilm.
e. Dayton Superior Corporation; Sure Film.
f. Euclid Chemical Company (The); Eucobar.
g. Kaufman Products, Inc.; Vapor Aid.
h. Lambert Corporation; Lambco Skin.
i. L&M Construction Chemicals, Inc.; E-Con.
j. MBT Protection and Repair, Div. of ChemRex; Confilm.
k. Meadows, W. R., Inc.; Sealtight Evapre.
l. Metalcrete Industries; Waterhold.
m. Nox-Crete Products Group, Kinsman Corporation; Monofilm.
n. Sika Corporation, Inc.; SikaFilm.

o. Symons Corporation, a Dayton Superior Company; Finishing Aid.
p. Unitex; Pro-Film.
q. US Mix Products Company; US Spec Monofilm ER.
r. Vexcon Chemicals, Inc.; Certi-Vex EnvioAssist.

B. Moisture-Retaining Cover: ASTM C 171, polyethylene film or white burlap-polyethylene sheet.

C. Clear, Waterborne, Membrane-Forming Curing and Sealing Compound: ASTM C 1315, Type 1, Class A.

1. Available Products:

a. Burke by Edoco; Cureseal 1315 WB.
b. ChemMasters; Polyseal WB.
c. Conspec Marketing & Manufacturing Co., Inc., a Dayton Superior Company; Sealcure 1315 WB.
d. Euclid Chemical Company (The); Super Diamond Clear VOX.
e. Kaufman Products, Inc.; Sure Cure 25 Emulsion.
f. Lambert Corporation; UV Safe Seal.
g. L&M Construction Chemicals, Inc.; Lumiseal WB Plus.
h. Meadows, W. R., Inc.; Vocomp-30.
i. Metalcrete Industries; Metcure 30.
j. Symons Corporation, a Dayton Superior Company; Cure & Seal 31 Percent E.
k. Tamms Industries, Inc.; LusterSeal WB 300.
l. Unitex; Hydro Seal 25.
m. US Mix Products Company; US Spec Radiance UV-25.
n. Vexcon Chemicals, Inc.; Vexcon Starseal 1315.

2.8 RELATED MATERIALS

A. Bonding Agent: ASTM C 1059, Type II, non-redispersible, acrylic emulsion or styrene butadiene.

B. Epoxy Bonding Adhesive: ASTM C 881, two-component epoxy resin, capable of humid curing and bonding to damp surfaces, of class suitable for application temperature and of grade to suit requirements, and as follows:

1. Types I and II, non-load bearing for bonding hardened or freshly mixed concrete to hardened concrete.

2.9 CONCRETE MIXTURES, GENERAL

A. Prepare design mixtures for each type and strength of concrete, proportioned on the basis of laboratory trial mixture or field test data, or both, according to ACI 301.

1. Use a qualified independent testing agency for preparing and reporting proposed mixture designs based on laboratory trial mixtures.

B. Cementitious Materials: Limit percentage, by weight, of cementitious materials other than portland cement in concrete as follows:

1. Fly Ash: 25 percent.
2. Combined Fly Ash and Pozzolan: 25 percent.
3. Ground Granulated Blast-Furnace Slag: 50 percent.

C. Limit water-soluble, chloride-ion content in hardened concrete to 0.06 percent by weight of cement.

D. Admixtures: Use admixtures according to manufacturer's written instructions.

1. Use water-reducinghigh-range water-reducing admixture in concrete, as required, for placement and workability.
2. Use water-reducing and retarding admixture when required by high temperatures, low humidity, or other adverse placement conditions.
3. Use water-reducing admixture in pumped concrete, concrete for heavy-use industrial slabs and parking structure slabs, concrete required to be watertight, and concrete with a water-cementitious materials ratio below 0.50.

2.10 CONCRETE MIXTURES FOR BUILDING ELEMENTS

A. Footings: Proportion normal-weight concrete mixture as follows:

1. Minimum Compressive Strength: 3500 psi (24.1 MPa) at 28 days.
2. Maximum Water-Cementitious Materials Ratio: 0.50
3. Slump Limit: 4 inches (100 mm) 8 inches (200 mm) for concrete with verified slump of 2 to 4 inches (50 to 100 mm) before adding high-range water-reducing admixture or plasticizing admixtureplus or minus 1 inch (25 mm).
4. Air Content: 5-1/2 percent, plus or minus 1.5 percent at point of delivery for 1-1/2-inch (38-mm) nominal maximum aggregate size.

B. Slabs-on-Grade: Proportion normal-weight concrete mixture as follows:

1. Minimum Compressive Strength: 3500 psi (24.1 MPa) at 28 days.
2. Minimum Cementitious Materials Content: 470 lb/cu. yd. (279 kg/cu. m) Slump Limit: 4 inches (100 mm, plus or minus 1 inch (25 mm).

3. Air Content: Do not allow air content of troweled finished floors to exceed 3 percent.

2.11 FABRICATING REINFORCEMENT

A. Fabricate steel reinforcement according to CRSI's "Manual of Standard Practice."

2.12 CONCRETE MIXING

A. Ready-Mixed Concrete: Measure, batch, mix, and deliver concrete according to ASTM C 94/C 94M, and furnish batch ticket information.

1. When air temperature is between 85 and 90 deg F (30 and 32 deg C), reduce mixing and delivery time from 1-1/2 hours to 75 minutes; when air temperature is above 90 deg F (32 deg C), reduce mixing and delivery time to 60 minutes.

PART 3 - EXECUTION

3.1 EMBEDDED ITEMS

A. Place and secure anchorage devices and other embedded items required for adjoining work that is attached to or supported by cast-in-place concrete. Use setting drawings, templates, diagrams, instructions, and directions furnished with items to be embedded.

1. Install anchor rods, accurately located, to elevations required and complying with tolerances in Section 7.5 of AISC's "Code of Standard Practice for Steel Buildings and Bridges."

3.2 VAPOR RETARDERS

A. Plastic Vapor Retarders: Place, protect, and repair vapor retarders according to ASTM E 1643 and manufacturer's written instructions.

1. Lap joints 6 inches (150 mm) and seal with manufacturer's recommended tape.

3.3 STEEL REINFORCEMENT

A. General: Comply with CRSI's "Manual of Standard Practice" for placing reinforcement.

1. Do not cut or puncture vapor retarder. Repair damage and reseal vapor retarder before placing concrete.

B. Clean reinforcement of loose rust and mill scale, earth, ice, and other foreign materials that would reduce bond to concrete.

C. Accurately position, support, and secure reinforcement against displacement. Locate and support reinforcement with bar supports to maintain minimum concrete cover. Do not tack weld crossing reinforcing bars.

D. Set wire ties with ends directed into concrete, not toward exposed concrete surfaces.

E. Install welded wire reinforcement in longest practicable lengths on bar supports spaced to minimize sagging. Lap edges and ends of adjoining sheets at least one mesh spacing. Offset laps of adjoining sheet widths to prevent continuous laps in either direction. Lace overlaps with wire.

3.4 CONCRETE PLACEMENT

A. Before placing concrete, verify that installation of formwork, reinforcement, and embedded items is complete and that required inspections have been performed.

B. Do not add water to concrete during delivery, at Project site, or during placement unless approved by Architect.

C. Deposit concrete continuously in one layer or in horizontal layers of such thickness that no new concrete will be placed on concrete that has hardened enough to cause seams or planes of weakness. If a section cannot be placed continuously, provide construction joints as indicated. Deposit concrete to avoid segregation.

1. Deposit concrete in horizontal layers of depth to not exceed formwork design pressures and in a manner to avoid inclined construction joints.
2. Consolidate placed concrete with mechanical vibrating equipment according to ACI 301.
3. Do not use vibrators to transport concrete inside forms. Insert and withdraw vibrators vertically at uniformly spaced locations to rapidly penetrate placed layer and at least 6 inches (150 mm) into preceding layer. Do not insert vibrators into lower layers of concrete that have begun to lose plasticity. At each insertion, limit duration of vibration to time necessary to consolidate concrete and complete embedment of reinforcement and other embedded items without causing mixture constituents to segregate.

D. Deposit and consolidate concrete for floors and slabs in a continuous operation, within limits of construction joints, until placement of a panel or section is complete.

1. Consolidate concrete during placement operations so concrete is thoroughly worked around reinforcement and other embedded items and into corners.
2. Maintain reinforcement in position on chairs during concrete placement.
3. Screed slab surfaces with a straightedge and strike off to correct elevations.
4. Slope surfaces uniformly to drains where required.
5. Begin initial floating using bull floats or darbies to form a uniform and open-textured surface plane, before excess bleedwater appears on the surface. Do not further disturb slab surfaces before starting finishing operations.

E. Cold-Weather Placement: Comply with ACI 306.1 and as follows. Protect concrete work from physical damage or reduced strength that could be caused by frost, freezing actions, or low temperatures.

1. When average high and low temperature is expected to fall below 40 deg F (4.4 deg C) for three successive days, maintain delivered concrete mixture temperature within the temperature range required by ACI 301.
2. Do not use frozen materials or materials containing ice or snow. Do not place concrete on frozen subgrade or on subgrade containing frozen materials.
3. Do not use calcium chloride, salt, or other materials containing antifreeze agents or chemical accelerators unless otherwise specified and approved in mixture designs.

F. Hot-Weather Placement: Comply with ACI 301 and as follows:

1. Maintain concrete temperature below 90 deg F (32 deg C) at time of placement. Chilled mixing water or chopped ice may be used to control temperature, provided water equivalent of ice is calculated to total amount of mixing water. Using liquid nitrogen to cool concrete is Contractor's option.
2. Fog-spray forms, steel reinforcement, and subgrade just before placing concrete. Keep subgrade uniformly moist without standing water, soft spots, or dry areas.

3.5 FINISHING FORMED SURFACES

A. Smooth-Formed Finish: As-cast concrete texture imparted by form-facing material, arranged in an orderly and symmetrical manner with a minimum of seams. Repair and patch tie holes and defects. Remove fins and other projections that exceed specified limits on formed-surface irregularities.

B. Apply to concrete surfaces exposed to public view, Related Unformed Surfaces: At tops of walls, horizontal offsets, and similar unformed surfaces adjacent to formed surfaces, strike off smooth and finish with a texture matching adjacent formed surfaces. Continue final surface treatment of formed surfaces uniformly across adjacent unformed surfaces, unless otherwise indicated.

3.6 FINISHING FLOORS AND SLABS

A. General: Comply with ACI 302.1R recommendations for screeding, restraightening, and finishing operations for concrete surfaces. Do not wet concrete surfaces.

B. Float Finish: Consolidate surface with power-driven floats or by hand floating if area is small or inaccessible to power driven floats. Restraighten, cut down high spots, and fill low spots. Repeat float passes and restraightening until surface is left with a uniform, smooth, granular texture.

1. Apply float finish to surfaces to receive trowel finish

C. Trowel Finish: After applying float finish, apply first troweling and consolidate concrete by hand or power-driven trowel. Continue troweling passes and restraighten until surface is free of trowel marks and uniform in texture and appearance. Grind smooth any surface defects that would telegraph through applied coatings or floor coverings.

1. Apply a trowel finish to surfaces exposed to view to be covered with resilient flooring, carpet, ceramic or quarry tile set over a cleavage membrane, paint, or another thin-film-finish coating system.
2. Finish surfaces to the following tolerances, according to ASTM E 1155 (ASTM E 1155M), for a randomly trafficked floor surface:

a. Specified overall values of flatness, F(F) 25; and of levelness, F(L) 20; with minimum local values of flatness, F(F) 17; and of levelness, F(L) 15.

D. Trowel and Fine-Broom Finish: Apply a first trowel finish to surfaces While concrete is still plastic, slightly scarify surface with a fine broom.

1. Comply with flatness and levelness tolerances for trowel finished floor surfaces.

E. Broom Finish: Apply a broom finish to exterior concrete platforms, steps, sidewalks and ramps, and elsewhere as indicated.

1. Immediately after float finishing, slightly roughen trafficked surface by brooming with fiber-bristle broom perpendicular to main traffic route. Coordinate required final finish with Architect before application.
2.

3.7 MISCELLANEOUS CONCRETE ITEMS

A. Filling In: Fill in holes and openings left in concrete structures, unless otherwise indicated, after work of other trades is in place. Mix, place, and cure concrete, as

specified, to blend with in-place construction. Provide other miscellaneous concrete filling indicated or required to complete the Work.

3.8 CONCRETE PROTECTING AND CURING

A. General: Protect freshly placed concrete from premature drying and excessive cold or hot temperatures. Comply with ACI 306.1 for cold-weather protection and ACI 301 for hot-weather protection during curing.

B. Evaporation Retarder: Apply evaporation retarder to unformed concrete surfaces if hot, dry, or windy conditions cause moisture loss approaching 0.2 lb/sq. ft. x h (1 kg/sq. m x h) before and during finishing operations. Apply according to manufacturer's written instructions after placing, screeding, and bull floating or darbying concrete, but before float finishing.

C. Formed Surfaces: Cure formed concrete surfaces, including underside of beams, supported slabs, and other similar surfaces. If forms remain during curing period, moist cure after loosening forms. If removing forms before end of curing period, continue curing for the remainder of the curing period.

D. Unformed Surfaces: Begin curing immediately after finishing concrete. Cure unformed surfaces, including floors and slabs, concrete floor toppings, and other surfaces.

E. Cure concrete according to ACI 308.1, by one or a combination of the following methods:

1. Curing and Sealing Compound: Apply uniformly to floors and slabs indicated in a continuous operation by power spray or roller according to manufacturer's written instructions. Recoat areas subjected to heavy rainfall within three hours after initial application. Repeat process 24 hours later and apply a second coat. Maintain continuity of coating and repair damage during curing period.

3.9 CONCRETE SURFACE REPAIRS

A. Defective Concrete: Repair and patch defective areas when approved by Architect. Remove and replace concrete that cannot be repaired and patched to Architect's approval.

B. Patching Mortar: Mix dry-pack patching mortar, consisting of one part Portland cement to two and one-half parts fine aggregate passing a No. 16 (1.18-mm) sieve, using only enough water for handling and placing.

C. Repairing Unformed Surfaces: Test unformed surfaces, such as floors and slabs, for finish and verify surface tolerances specified for each surface. Correct low and high areas. Test surfaces sloped to drain for trueness of slope and smoothness; use a sloped template.

1. Repair finished surfaces containing defects. Surface defects include spalls, popouts, honeycombs, rock pockets, crazing and cracks in excess of 0.01 inch (0.25 mm) wide or that penetrate to reinforcement or completely through unreinforced sections regardless of width, and other objectionable conditions.
2. After concrete has cured at least 14 days, correct high areas by grinding.
3. Correct localized low areas during or immediately after completing surface finishing operations by cutting out low areas and replacing with patching mortar. Finish repaired areas to blend into adjacent concrete.
4. Repair defective areas, except random cracks and single holes 1 inch (25 mm) or less in diameter, by cutting out and replacing with fresh concrete. Remove defective areas with clean, square cuts and expose steel reinforcement with at least a 3/4-inch (19-mm) clearance all around. Dampen concrete surfaces in contact with patching concrete and apply bonding agent. Mix patching concrete of same materials and mixture as original concrete except without coarse aggregate. Place, compact, and finish to blend with adjacent finished concrete. Cure in same manner as adjacent concrete.
5. Repair random cracks and single holes 1 inch (25 mm) or less in diameter with patching mortar. Groove top of cracks and cut out holes to sound concrete and clean off dust, dirt, and loose particles. Dampen cleaned concrete surfaces and apply bonding agent. Place patching mortar before bonding agent has dried. Compact patching mortar and finish to match adjacent concrete. Keep patched area continuously moist for at least 72 hours.

D. Perform structural repairs of concrete, subject to Architect's approval, using epoxy adhesive and patching mortar.

E. Repair materials and installation not specified above may be used, subject to Architect's approval.

3.10 FIELD QUALITY CONTROL

A. Testing and Inspecting: Owner will engage a structural engineer special inspector licensed in the state to Virginia and qualified testing and inspecting agency to perform field tests and inspections and prepare test reports. Inspections shall be performed in accordance with the Hampton Roads Schedule and Statement of Special Inspections.

B. Testing and Inspecting: Engage a qualified testing and inspecting agency to perform tests and inspections and to submit reports.

C. Inspections:

1. Steel reinforcement placement.
2. Steel reinforcement welding.
3. Headed bolts and studs.
4. Verification of use of required design mixture.
5. Concrete placement, including conveying and depositing.
6. Curing procedures and maintenance of curing temperature.

D. Concrete Tests: Testing of composite samples of fresh concrete obtained according to ASTM C 172 shall be performed according to the following requirements:

1. Testing Frequency: Obtain one composite sample for each day's pour of each concrete mixture exceeding 5 cu. yd. (4 cu. m), but less than 25 cu. yd. (19 cu. m), plus one set for each additional 50 cu. yd. (38 cu. m) or fraction thereof.

2. Slump: ASTM C 143/C 143M; one test at point of placement for each composite sample, but not less than one test for each day's pour of each concrete mixture. Perform additional tests when concrete consistency appears to change.
3. Air Content: ASTM C 231, pressure method, for normal-weight concrete; one test for each composite sample, but not less than one test for each day's pour of each concrete mixture.
4. Concrete Temperature: ASTM C 1064/C 1064M; one test hourly when air temperature is 40 deg F (4.4 deg C) and below and when 80 deg F (27 deg C) and above, and one test for each composite sample.
5. Compression Test Specimens: ASTM C 31/C 31M.

   a. Cast and laboratory cure two sets of two standard cylinder specimens for each composite sample.
   b. Cast and field cure two sets of two standard cylinder specimens for each composite sample.

6. Compressive-Strength Tests: ASTM C 39/C 39M; test one set of two laboratory-cured specimens at 7 days and one set of two specimens at 28 days.

   a. Test one set of two field-cured specimens at 7 days and one set of two specimens at 28 days.
   b. A compressive-strength test shall be the average compressive strength from a set of two specimens obtained from same composite sample and tested at age indicated.

7. When strength of field-cured cylinders is less than 85 percent of companion laboratory-cured cylinders, Contractor shall evaluate operations and provide corrective procedures for protecting and curing in-place concrete.
8. Strength of each concrete mixture will be satisfactory if every average of any three consecutive compressive-strength tests equals or exceeds specified compressive strength and no compressive-strength test value falls below specified compressive strength by more than 500 psi (3.4 MPa).
9. Test results shall be reported in writing to Architect, concrete manufacturer, and Contractor within 48 hours of testing. Reports of compressive-strength tests shall contain Project identification name and number, date of concrete placement, name of concrete testing and inspecting agency, location of concrete batch in Work, design compressive strength at 28 days, concrete mixture proportions and materials, compressive breaking strength, and type of break for both 7- and 28-day tests.
10. Nondestructive Testing: Impact hammer, sonoscope, or other nondestructive device may be permitted by Architect but will not be used as sole basis for approval or rejection of concrete.
11. Additional Tests: Testing and inspecting agency shall make additional tests of concrete when test results indicate that slump, air entrainment, compressive strengths, or other requirements have not been met, as directed by Architect. Testing and inspecting agency may conduct tests to determine adequacy of concrete by cored cylinders complying with ASTM C 42/C 42M or by other methods as directed by Architect.
12. Additional testing and inspecting, at Contractor's expense, will be performed to determine compliance of replaced or additional work with specified requirements.
13. Correct deficiencies in the Work that test reports and inspections indicate dos not comply with the Contract Documents.

E. Measure floor and slab flatness and levelness according to ASTM E 1155 (ASTM E 1155M) within 24 hours of finishing.

END OF SECTION 033000

THIS PAGE LEFT INTENTIONALLY BLANK

SECTION 042000 - UNIT MASONRY

PART 1 - GENERAL

1.1 RELATED DOCUMENTS

A. Drawings and general provisions of the Contract, including General and Supplementary Conditions and Division 01 Specification Sections, apply to this Section.

1.2 SUMMARY

A. This Section includes unit masonry assemblies consisting of the following:

1. Concrete masonry units (CMUs, Concrete Block or Block).
2. Mortar and grout.
3. Reinforcing steel.
4. Ties and anchors.
5. Embedded flashing.
6. Miscellaneous masonry accessories.
7. Cavity-wall insulation.

B. Related Sections include the following:

1. Division 07 Section "Bituminous Dampproofing" for dampproofing applied to cavity face of backup wythes of cavity walls.
2. Division 07 Section "Flashing and Sheet Metal" for **exposed** sheet metal flashing.
3. Division 07 Section "Penetration Firestopping" for firestopping at openings in masonry walls.
4. Division 07 Section "Joint Sealants" for sealing joints in unit masonry.

C. Products installed, but not furnished, under this Section include the following:

1. Steel lintels for unit masonry, furnished under Division 05 Section "Metal Fabrications."

1.3 DEFINITIONS

A. Reinforced Masonry: Masonry containing reinforcing steel in grouted cells.

1.4 PERFORMANCE REQUIREMENTS

A. Provide structural unit masonry that develops indicated net-area compressive strengths (f'_m) at 28 days.

B. Determine net-area compressive strength (f'_m) of masonry from average net-area compressive strengths of masonry units and mortar types (unit-strength method) according to Tables 1 and 2 in ACI 530.1/ASCE 6/TMS 602.

1.5 SUBMITTALS

A. Product Data: For each type of product indicated.

B. Shop Drawings: For the following:

1. Masonry Units: Show sizes, profiles, coursing, and locations of special shapes.
2. Reinforcing Steel: Detail bending and placement of unit masonry reinforcing bars. Comply with ACI 315, "Details and Detailing of Concrete Reinforcement."

C. Samples for Verification: For each type and color of the following:
1. Accessories embedded in masonry.

D. List of Materials Used in Constructing Mockups: List generic product names together with manufacturers, manufacturers' product names, model numbers, lot numbers, batch numbers, source of supply, and other information as required to identify materials used. Include mix proportions for mortar and grout and source of aggregates.

1. Submittal is for information only. Neither receipt of list nor approval of mockup constitutes approval of deviations from the Contract Documents unless such deviations are specifically brought to the attention of Architect and approved in writing.

E. Material Certificates: Include statements of material properties indicating compliance with requirements including compliance with standards and type designations within standards. Provide for each type and size of the following:

1. Masonry units.

a. Include material test reports substantiating compliance with requirements.
b. For masonry units used in structural masonry, include data and calculations establishing average net-area compressive strength of units.

2. Cementitious materials. Include brand, type, and name of manufacturer.
3. Preblended, dry mortar mixes. Include description of type and proportions of ingredients.

4. Grout mixes. Include description of type and proportions of ingredients.
5. Reinforcing bars.
6. Anchors, ties, and metal accessories.

F. Mix Designs: For each type of mortar and grout. Include description of type and proportions of ingredients.

1. Include test reports, per ASTM C 780, for mortar mixes required to comply with property specification.
2. Include test reports, per ASTM C 1019, for grout mixes required to comply with compressive strength requirement.

G. Statement of Compressive Strength of Masonry: For each combination of masonry unit type and mortar type, provide statement of average net-area compressive strength of masonry units, mortar type, and resulting net-area compressive strength of masonry determined according to Tables 1 and 2 in ACI 530.1/ASCE 6/TMS 602.

1.6 QUALITY ASSURANCE

A. Source Limitations for Masonry Units: Obtain exposed masonry units of a uniform texture and color, or a uniform blend within the ranges accepted for these characteristics, through one source from a single manufacturer for each product required.

B. Source Limitations for Mortar Materials: Obtain mortar ingredients of a uniform quality, including color for exposed masonry, from a single manufacturer for each cementitious component and from one source or producer for each aggregate.

C. Fire-Resistance Ratings: Where indicated, provide materials and construction identical to those of assemblies with fire-resistance ratings determined per ASTM E 119 by a testing and inspecting agency, by equivalent concrete masonry thickness, or by other means, as acceptable to authorities having jurisdiction.

1.7 DELIVERY, STORAGE, AND HANDLING

A. Store masonry units on elevated platforms in a dry location. If units are not stored in an enclosed location, cover tops and sides of stacks with waterproof sheeting, securely tied. If units become wet, do not install until they are dry.

B. Store cementitious materials on elevated platforms, under cover, and in a dry location. Do not use cementitious materials that have become damp.

C. Store aggregates where grading and other required characteristics can be maintained and contamination avoided.

D. Deliver preblended, dry mortar mix in moisture-resistant containers designed for lifting and emptying into dispensing silo. Store preblended, dry mortar mix in

delivery containers on elevated platforms, under cover, and in a dry location or in a metal dispensing silo with weatherproof cover.

E. Store masonry accessories, including metal items, to prevent corrosion and accumulation of dirt and oil.

1.8 PROJECT CONDITIONS

A. Do not apply uniform floor or roof loads for at least 12 hours and concentrated loads for at least 3 days after building masonry walls or columns.

B. Stain Prevention: Prevent grout, mortar, and soil from staining the face of masonry to be left exposed or painted. Immediately remove grout, mortar, and soil that come in contact with such masonry.
   1. Protect surfaces of window and door frames, as well as similar products with painted and integral finishes, from mortar droppings.
   2. Protect floor surfaces from staining from mortar droppings.

C. Hot-Weather Requirements: Comply with hot-weather construction requirements contained in ACI 530.1/ASCE 6/TMS 602.

PART 2 - PRODUCTS

2.1 MANUFACTURERS

A. In other Part 2 articles where titles below introduce lists, the following requirements apply to product selection:
   1. Available Manufacturers: Subject to compliance with requirements, manufacturers offering products that may be incorporated into the Work include, but are not limited to, manufacturers specified.

2.2 MASONRY UNITS, GENERAL

A. Defective Units: Referenced masonry unit standards may allow a certain percentage of units to exceed tolerances and to contain chips, cracks, or other defects exceeding limits stated in the standard. Do not uses units where such defects, including dimensions that vary from specified dimensions by more than stated tolerances, will be exposed in the completed Work or will impair the quality of completed masonry.

2.3 CONCRETE MASONRY UNITS (BLOCK)

A. Shapes: Provide shapes indicated and as follows:

1. Provide special shapes for lintels, corners, jambs, sashes, movement joints, headers, bonding, and other special conditions.

B. Concrete Masonry Units: ASTM C 90.

1. Weight Classification: Lightweight.
2. Size (Width): Manufactured to dimensions 3/8 inch less than nominal dimensions.

2.4 2.4 BRICK

A. General: Provide shapes indicated and as follows, with exposed surfaces matching finish and color of exposed faces of adjacent units:
1. Provide special shapes for applications where shapes produced by sawing would result in sawed surfaces being exposed to view.

B. Face Brick: Facing brick complying with ASTM C 216.

1. Products: Subject to compliance with requirements, provide the following:

a. “Raleigh Court” as manufactured by General Shale Brick or an approved alternate.

2. Grade: SW.
3. Type: FBS.
4. Efflorescence: Provide brick that has been tested according to ASTM C 67 and is rated "not effloresced."
5. Surface Coating: Brick with colors or textures produced by application of coatings shall withstand 50 cycles of freezing and thawing per ASTM C 67 with no observable difference in the applied finish when viewed from 10 feet (3 m).
6. Size (Actual Dimensions): 3-5/8 inches (92 mm) wide by 2-1/4 inches (57 mm) high by 7-5/8 inches (194 mm) long.

2.5 MASONRY LINTELS

A. Masonry Lintels: Prefabricated or built-in-place masonry lintels made from bond beam concrete masonry units with reinforcing bars placed as indicated and filled with coarse grout. Cure precast lintels before handling and installing. Temporarily support built-in-place lintels until cured.

2.6 MORTAR AND GROUT MATERIALS

A. Portland Cement: ASTM C 150, Type I or II, except Type III may be used for cold-weather construction. Provide natural color or white cement as required to produce mortar that matches the mortar used on the existing building.

B. Hydrated Lime: ASTM C 207, Type S.

C. Portland Cement-Lime Mix: Packaged blend of portland cement complying with ASTM C 150, Type I or Type III, and hydrated lime complying with ASTM C 207, Type S.

D. Masonry Cement: ASTM C 91.

1. Available Products:

a. Capital Materials Corporation; Flamingo Color Masonry Cement.
b. Essroc, Italcementi Group; Brixment or Velvet.
c. Holcim (US) Inc.; Mortamix Masonry Cement.
d. Lafarge North America Inc.; Magnolia Masonry Cement.
e. Lehigh Cement Company; Lehigh Masonry Cement.
f. National Cement Company, Inc.; Coosa Masonry Cement.

E. Mortar Cement: ASTM C 1329.

1. Available Products:

a. Lafarge North America Inc.; Lafarge Mortar Cement or Magnolia Superbond Mortar Cement.

F. Aggregate for Mortar: ASTM C 144.

1. For mortar that is exposed to view, use washed aggregate consisting of natural sand or crushed stone.
2. For joints less than 1/4 inch thick, use aggregate graded with 100 percent passing the No. 16 sieve.

G. Aggregate for Grout: ASTM C 404.

H. Water: Potable.

2.7 REINFORCEMENT

A. Uncoated Steel Reinforcing Bars: ASTM A 615/A 615M or ASTM A 996/A 996M, Grade 60 .

2.8 TIES AND ANCHORS

A. Materials: Provide ties and anchors specified in subsequent paragraphs that are made from materials that comply with sub-paragraphs below, unless otherwise indicated.
1. Hot-Dip Galvanized, Carbon-Steel Wire: ASTM A 82; with ASTM A 153/A 153M, Class B-2 coating.

2. Galvanized Steel Sheet: ASTM A 653/A 653M, Commercial Steel, G60 zinc coating.
3. Steel Sheet, Galvanized after Fabrication: ASTM A 1008/A 1008M, Commercial Steel, hot-dip galvanized after fabrication to comply with ASTM A 153/A 153M.

B. Corrugated Metal Ties: Metal strips not less than 7/8 inch wide with corrugations having a wavelength of 0.3 to 0.5 inch and an amplitude of 0.06 to 0.10 inch made from steel sheet, galvanized after fabrication not less than 0.053 inch thick. Ties made from galvanized steel sheet may be used in interior walls, unless otherwise indicated.

2.9 MISCELLANEOUS ANCHORS

A. Anchor Bolts: Headed or L-shaped steel bolts complying with ASTM A 307, Grade A; with ASTM A 563 hex nuts and, where indicated, flat washers; hot-dip galvanized to comply with ASTM A 153/A 153M, Class C; of dimensions indicated.

B. Post-installed Anchors: Provide chemical or torque-controlled expansion anchors, with capability to sustain, without failure, a load equal to six times the load imposed when installed in solid or grouted unit masonry and equal to four times the load imposed when installed in concrete, as determined by testing per ASTM E 488 conducted by a qualified independent testing agency.

1. Corrosion Protection: Carbon-steel components zinc plated to comply with ASTM B 633, Class Fe/Zn 5 (5 microns) for Class SC 1 service condition (mild).
2. Corrosion Protection: Stainless-steel components complying with ASTM F 593 and ASTM F 594, Alloy Group 1 or 2 for bolts and nuts; ASTM A 666 or ASTM A 276, Type 304 or 316, for anchors.

2.10 EMBEDDED FLASHING MATERIALS

A. Flexible Flashing: For flashing not exposed to the exterior, use one of the following, unless otherwise indicated:

1. Elastomeric Thermoplastic Flashing: Composite flashing product consisting of a polyester-reinforced ethylene interpolymer alloy as follows:

a. Monolithic Sheet: Elastomeric thermoplastic flashing, 0.040 inch thick.
b. Self-Adhesive Sheet: Elastomeric thermoplastic flashing, 0.025 inch thick, with a 0.015-inch- thick coating of rubberized-asphalt adhesive.
c. Self-Adhesive Sheet with Drip Edge: Elastomeric thermoplastic flashing, 0.025 inch thick, with a 0.015-inch- thick coating of rubberized-asphalt adhesive. Where flashing extends to face of masonry, rubberized-asphalt coating is held back approximately 1-1/2 inches from edge.

1) Color: Black.

d. Accessories: Provide preformed corners, end dams, other special shapes, and seaming materials produced by flashing manufacturer.

e. Available Products:

1) Hyload, Inc.; Hyload Cloaked Flashing System.

B. Adhesives, Primers, and Seam Tapes for Flashings: Flashing manufacturer's standard products or products recommended by flashing manufacturer for bonding flashing sheets to each other and to substrates.

2.11 MISCELLANEOUS MASONRY ACCESSORIES

A. Compressible Filler: Pre-molded filler strips complying with ASTM D 1056, Grade 2A1; compressible up to 35 percent; of width and thickness indicated; formulated from neoprene urethane or PVC.

2.12 CAVITY-WALL INSULATION

A. Extruded-Polystyrene Board Insulation: ASTM C 578, Type IV, closed-cell product extruded with an integral skin.

B. Adhesive: Type recommended by insulation board manufacturer for application indicated.

2.13 MASONRY CLEANERS

A. Proprietary Acidic Cleaner: Manufacturer's standard-strength cleaner designed for removing mortar/grout stains, efflorescence, and other new construction stains from new masonry without discoloring or damaging masonry surfaces. Use product expressly approved for intended use by cleaner manufacturer and manufacturer of masonry units being cleaned.

1. Available Manufacturers:

a. Diedrich Technologies, Inc.
b. EaCo Chem, Inc.
c. ProSoCo, Inc.

2.14 MORTAR AND GROUT MIXES

A. General: Do not use admixtures, including pigments, air-entraining agents, accelerators, retarders, water-repellent agents, antifreeze compounds, or other admixtures, unless otherwise indicated.

1. Do not use calcium chloride in mortar or grout.
2. Limit cementitious materials in mortar for exterior and reinforced masonry to portland cement and lime.
3. Add cold-weather admixture (if used) at same rate for all mortar that will be exposed to view, regardless of weather conditions, to ensure that mortar color is consistent.

B. Preblended, Dry Mortar Mix: Furnish dry mortar ingredients in form of a preblended mix. Measure quantities by weight to ensure accurate proportions, and thoroughly blend ingredients before delivering to Project site.

C. Mortar for Unit Masonry: Comply with **ASTM C 270** & **BIA Technical Notes 8A**, Proportion Specification. Provide the following types of mortar for applications stated unless another type is indicated **or needed to provide required compressive strength of masonry**.

1. For masonry below grade or in contact with earth, use Type M.
2. For reinforced masonry, use Type S.
3. For exterior, above-grade, load-bearing and non-load-bearing walls and parapet walls; for interior load-bearing walls; for interior non-load-bearing partitions; and for other applications where another type is not indicated, use Type N.
4. For interior non-load-bearing partitions, Type O may be used instead of Type N.

D. Grout for Unit Masonry: Comply with ASTM C 476.

1. Use grout of type indicated or, if not otherwise indicated, of type (fine or coarse) that will comply with Table 1.15.1 in ACI 530.1/ASCE 6/TMS 602 for dimensions of grout spaces and pour height.
2. Provide grout with a slump of 8 to 11 inches as measured according to ASTM C 143/C 143M.

PART 3 - EXECUTION

3.1 EXAMINATION

A. Examine conditions, with Installer present, for compliance with requirements for installation tolerances and other conditions affecting performance of work.

1. For the record, prepare written report, endorsed by Installer, listing conditions detrimental to performance of work.
2. Verify that foundations are within tolerances specified.
3. Verify that reinforcing dowels are properly placed.

B. Before installation, examine rough-in and built-in construction for piping systems to verify actual locations of piping connections.

C. Proceed with installation only after unsatisfactory conditions have been corrected.

3.2 INSTALLATION, GENERAL

A. Thickness: Build cavity and composite walls and other masonry construction to full thickness shown. Build single-wythe walls to actual widths of masonry units, using units of widths indicated.

B. Build chases and recesses to accommodate items specified in this and other Sections.

C. Leave openings for equipment to be installed before completing masonry. After installing equipment, complete masonry to match the construction immediately adjacent to opening.

D. Use full-size units without cutting if possible. If cutting is required to provide a continuous pattern or to fit adjoining construction, cut units with motor-driven saws; provide clean, sharp, unchipped edges. Allow units to dry before laying unless wetting of units is specified. Install cut units with cut surfaces and, where possible, cut edges concealed.

E. Select and arrange units for exposed unit masonry to produce a uniform blend of colors and textures.

1. Mix units from several pallets or cubes as they are placed.

F. Matching Existing Masonry: Match coursing, bonding, color, and texture of existing masonry.

G. Comply with construction tolerances in ACI 530.1/ASCE 6/TMS 602 and with the following:

1. For conspicuous vertical lines, such as external corners, door jambs, reveals, and expansion and control joints, do not vary from plumb by more than 1/8 inch in 10 feet , 1/4 inch in 20 feet , or 1/2 inch maximum.
2. For vertical alignment of exposed head joints, do not vary from plumb by more than 1/4 inch in 10 feet , or 1/2 inch maximum.
3. For conspicuous horizontal lines, such as lintels, sills, parapets, and reveals, do not vary from level by more than 1/8 inch in 10 feet , 1/4 inch in 20 feet , or 1/2 inch maximum.
4. For exposed bed joints, do not vary from thickness indicated by more than plus or minus 1/8 inch , with a maximum thickness limited to 1/2 inch . Do not vary from bed-joint thickness of adjacent courses by more than 1/8 inch .

5. For exposed head joints, do not vary from thickness indicated by more than plus or minus 1/8 inch . Do not vary from adjacent bed-joint and head-joint thicknesses by more than 1/8 inch .
6. For faces of adjacent exposed masonry units, do not vary from flush alignment by more than 1/16 inch except due to warpage of masonry units within tolerances specified for warpage of units.
7. For exposed bed joints and head joints of stacked bond, do not vary from a straight line by more than 1/16 inch from one masonry unit to the next.

3.3 LAYING MASONRY WALLS

A. Lay out walls in advance for accurate spacing of surface bond patterns with uniform joint thicknesses and for accurate location of openings, movement-type joints, returns, and offsets. Avoid using less-than-half-size units, particularly at corners, jambs, and, where possible, at other locations.

B. Bond Pattern for Exposed Masonry: Unless otherwise indicated, lay exposed masonry in running bond; do not use units with less than nominal 4-inch horizontal face dimensions at corners or jambs.

C. Lay concealed masonry with all units in a wythe in running bond or bonded by lapping not less than 4-inches. Bond and interlock each course of each wythe at corners. Do not use units with less than nominal 4-inch horizontal face dimensions at corners or jambs.

D. Stopping and Resuming Work: Stop work by racking back units in each course from those in course below; do not tooth. When resuming work, clean masonry surfaces that are to receive mortar, remove loose masonry units and mortar, and wet brick if required before laying fresh masonry.

E. Built-in Work: As construction progresses, build in items specified in this and other Sections. Fill in solidly with masonry around built-in items.

F. Fill space between steel frames and masonry solidly with mortar, unless otherwise indicated.

G. Where built-in items are to be embedded in cores of hollow masonry units, place a layer of metal lath, wire mesh, or plastic mesh in the joint below and rod mortar or grout into core.

H. Fill cores in hollow concrete masonry units with grout 24 inches under bearing plates, beams, lintels, posts, and similar items, unless otherwise indicated.

I. Build non-load-bearing interior partitions full height of story to underside of solid floor or roof structure above, unless otherwise indicated.
   1. At fire-rated partitions, treat joint between top of partition and underside of structure above to meet fire resistant construction requirements.

3.4 MORTAR BEDDING AND JOINTING

A. Lay hollow concrete masonry units as follows:

1. With face shells fully bedded in mortar and with head joints of depth equal to bed joints.
2. With webs fully bedded in mortar in all courses of piers, columns, and pilasters.
3. With webs fully bedded in mortar in grouted masonry, including starting course on footings.
4. With entire units, including areas under cells, fully bedded in mortar at starting course on footings where cells are not grouted.

B. Lay solid masonry units with completely filled bed and head joints; butter ends with sufficient mortar to fill head joints and shove into place. Do not deeply furrow bed joints or slush head joints.

C. Tool exposed joints slightly concave when thumbprint hard, using a jointer larger than joint thickness, unless otherwise indicated.

D. Cut joints flush for masonry walls to receive plaster or other direct-applied finishes (other than paint), unless otherwise indicated.

3.5 CAVITY WALLS

A. Bond wythes of cavity walls together using one of the following methods:

1. Individual Metal Ties: Provide ties installed in horizontal joints, but not less than one metal tie for 4.5 sq. ft. of wall area spaced not to exceed 24 inches o.c. horizontally and 16 inches o.c. vertically. Stagger ties in alternate courses. Provide additional ties within 12 inches of openings and space not more than 36 inches apart around perimeter of openings. At intersecting and abutting walls, provide ties at no more than 24 inches o.c. vertically.

B. Keep cavities clean of mortar droppings and other materials during construction. Bevel beds away from cavity, to minimize mortar protrusions into cavity. Do not attempt to trowel or remove mortar fins protruding into cavity.

C. Coat cavity face of backup wythe with bituminous dampproofing.

D. Installing Cavity-Wall Insulation: Place small dabs of adhesive, spaced approximately 12 inches o.c. both ways, on inside face of insulation boards, or attach with plastic fasteners designed for this purpose. Fit courses of insulation between wall ties and other confining obstructions in cavity, with edges butted tightly both ways. Press units firmly against inside wythe of masonry or other construction as shown.

1. Fill cracks and open gaps in insulation with crack sealer compatible with insulation and masonry.

3.6 CONTROL AND EXPANSION JOINTS

A. General: Install control and expansion joint materials in unit masonry as masonry progresses. Do not allow materials to span control and expansion joints without provision to allow for in-plane wall or partition movement.

B. Form control joints in concrete masonry as follows:
   1. Install temporary foam-plastic filler in head joints and remove filler when unit masonry is complete for application of sealant.

C. Provide horizontal, pressure-relieving joints by either leaving an air space or inserting a compressible filler of width required for installing sealant and backer rod specified in Division 07 Section "Joint Sealants," but not less than 3/8 inch.

   1. Locate horizontal, pressure-relieving joints beneath shelf angles supporting masonry.

3.7 LINTELS

A. Install steel lintels where indicated.

B. Provide masonry lintels where shown and where openings of more than 8 inches for brick-size units and 16 inches for block-size units are shown without structural steel or other supporting lintels.

C. Provide minimum bearing of 8 inches at each jamb, unless otherwise indicated.

3.8 FLASHING, WEEP HOLES, CAVITY DRAINAGE, AND VENTS

A. General: Install embedded flashing and weep holes in masonry at shelf angles, lintels, ledges, other obstructions to downward flow of water in wall, and where indicated.

B. Install flashing as follows, unless otherwise indicated:

   1. Prepare masonry surfaces so they are smooth and free from projections that could puncture flashing. Where flashing is within mortar joint, place through-wall flashing on sloping bed of mortar and cover with mortar. Before covering with mortar, seal penetrations in flashing with adhesive, sealant, or tape as recommended by flashing manufacturer.
   2. At multiwythe masonry walls, including cavity walls, extend flashing through outer wythe, turned up a minimum of 8 inches, and 1-1/2 inches into the inner wythe. Form 1/4-inch hook in edge of flashing embedded in inner wythe.

3. At lintels and shelf angles, extend flashing a minimum of 6 inches into masonry at each end. At heads and sills, extend flashing 6 inches at ends and turn up not less than 2 inches to form end dams.
4. Cut flexible flashing off flush with face of wall after masonry wall construction is completed.

C. Install weep holes in head joints in exterior wythes of first course of masonry immediately above embedded flashing and as follows:

1. Use full raked head joints to form weep holes.

3.9 REINFORCED UNIT MASONRY INSTALLATION

A. Placing Reinforcement: Comply with requirements in ACI 530.1/ASCE 6/TMS 602.

B. Grouting: Do not place grout until entire height of masonry to be grouted has attained enough strength to resist grout pressure.

1. Comply with requirements in ACI 530.1/ASCE 6/TMS 602 for cleanouts and for grout placement, including minimum grout space and maximum pour height.
2. Limit height of vertical grout pours to not more than 60 inches.

3.10 FIELD QUALITY CONTROL

3.11 REPAIRING, POINTING, AND CLEANING

A. Remove and replace masonry units that are loose, chipped, broken, stained, or otherwise damaged or that do not match adjoining units. Install new units to match adjoining units; install in fresh mortar, pointed to eliminate evidence of replacement.

B. Pointing: During the tooling of joints, enlarge voids and holes, except weep holes, and completely fill with mortar. Point up joints, including corners, openings, and adjacent construction, to provide a neat, uniform appearance. Prepare joints for sealant application, where indicated.

C. In-Progress Cleaning: Clean unit masonry as work progresses by dry brushing to remove mortar fins and smears before tooling joints.

D. Final Cleaning: After mortar is thoroughly set and cured, clean exposed masonry as follows:

1. Remove large mortar particles by hand with wooden paddles and nonmetallic scrape hoes or chisels.

2. Test cleaning methods on sample wall panel; leave one-half of panel uncleaned for comparison purposes. Obtain Architect's approval of sample cleaning before proceeding with cleaning of masonry.
3. Protect adjacent surfaces from contact with cleaner by covering them with liquid strippable masking agent or polyethylene film and waterproof masking tape.
4. Wet wall surfaces with water before applying cleaners; remove cleaners promptly by rinsing surfaces thoroughly with clear water.
5. Clean concrete masonry by cleaning method indicated in NCMA TEK 8-2A applicable to type of stain on exposed surfaces.

3.12 MASONRY WASTE DISPOSAL

A. Salvageable Materials: Unless otherwise indicated, excess masonry materials are Contractor's property. At completion of unit masonry work, remove from Project site.

B. Excess Masonry Waste: Remove excess clean masonry waste that cannot be used as fill, as described above, and other masonry waste, and legally dispose of off Owner's property.

END OF SECTION 042000

THIS PAGE LEFT INTENTIONALLY BLANK

SECTION 051200 - STRUCTURAL STEEL

PART 1 - GENERAL

1.1 SUMMARY

A. This Section includes the following:

1. Structural steel.
2. Grout (used in conjunction with structural steel).

B. Related Sections include the following:

1. Division 01 Section "Quality Requirements" for independent testing agency procedures and administrative requirements.

1.2 DEFINITIONS

A. Structural Steel: Elements of structural-steel frame, as classified by AISC's "Code of Standard Practice for Steel Buildings and Bridges," that support design loads.

1.3 PERFORMANCE REQUIREMENTS

A. Connections: Provide details of connections required by the Contract Documents to be selected or completed by structural-steel fabricator to withstand ASD-service loads indicated and comply with other information and restrictions indicated.

1. Select and complete connections using and AISC's "Manual of Steel Construction, Allowable Stress Design," Part 4.
2. Engineering Responsibility: Fabricator's responsibilities include using a qualified professional engineer to prepare structural analysis data for structural-steel connections.

B. Construction: Type 1, rigid frame 2, simple framing

1.4 SUBMITTALS

A. Product Data: For each type of product indicated.

B. Shop Drawings: Show fabrication of structural-steel components.

1. Include details of cuts, connections, splices, camber, holes, and other pertinent data.
2. Include embedment drawings.
3. Indicate welds by standard AWS symbols, distinguishing between shop and field welds, and show size, length, and type of each weld.
4. Indicate type, size, and length of bolts, distinguishing between shop and field bolts. Identify pre-tensioned and slip-critical high-strength bolted connections.
5. For structural-steel connections indicated to comply with design loads, include structural analysis data prepared by the qualified professional engineer responsible for their preparation.

C. Welding certificates.

D. Qualification Data: For Installer fabricator

E. Mill Test Reports: Signed by manufacturers certifying that the following products comply with requirements:

1. Structural steel including chemical and physical properties.
2. Bolts, nuts, and washers including mechanical properties and chemical analysis.
3. Direct-tension indicators.
4. Shop primers.
5. Nonshrink grout used in conjunction with structural steel.

F. Source quality-control test reports.

1.5 QUALITY ASSURANCE

A. Shop-Painting Applicators: Qualified according to AISC's Sophisticated Paint Endorsement P1 or SSPC-QP 3, "Standard Procedure for Evaluating Qualifications of Shop Painting Applicators."

B. Welding: Qualify procedures and personnel according to AWS D1.1, "Structural Welding Code--Steel."

C. Comply with applicable provisions of the following specifications and documents:

1. AISC's "Code of Standard Practice for Steel Buildings and Bridges."
2. AISC's "Seismic Provisions for Structural Steel Buildings" and "Supplement No. 2."
3. AISC's "Specification for Structural Steel Buildings--Allowable Stress Design and Plastic Design
4. AISC's "Specification for the Design of Steel Hollow Structural Sections."
5. AISC's "Specification for Allowable Stress Design of Single-Angle Members
6. RCSC's "Specification for Structural Joints Using ASTM A 325 or A 490 Bolts."

D. Pre-installation Conference: Conduct conference at Project site to comply with requirements in Division 01 Section "Project Management and Coordination."

1.6 DELIVERY, STORAGE, AND HANDLING

A. Store materials to permit easy access for inspection and identification. Keep steel members off ground and spaced by using pallets, dunnage, or other supports and spacers. Protect steel members and packaged materials from erosion and deterioration.

1. Store fasteners in a protected place. Clean and relubricate bolts and nuts that become dry or rusty before use.
2. Do not store materials on structure in a manner that might cause distortion, damage, or overload to members or supporting structures. Repair or replace damaged materials or structures as directed.

1.7 COORDINATION

A. Furnish anchorage items to be embedded in or attached to other construction without delaying the Work. Provide setting diagrams, sheet metal templates, instructions, and directions for installation.

PART 2 - PRODUCTS

2.1 STRUCTURAL-STEEL MATERIALS

A. W-Shapes: ASTM A 992/A 992M.

B. Channels, Angles-Shapes: ASTM A 36/A 36M.

C. Plate and Bar: ASTM A 36/A 36M

D. Cold-Formed Hollow Structural Sections: ASTM A 500, Grade B structural tubing.

E. Welding Electrodes: Comply with AWS requirements.

2.2 BOLTS, CONNECTORS, AND ANCHORS

A. High-Strength Bolts, Nuts, and Washers: ASTM A 325 (ASTM A 325M), Type 1, heavy hex steel structural bolts; ASTM A 563 (ASTM A 563M) heavy hex carbon-steel nuts; and ASTM F 436 (ASTM F 436M) hardened carbon-steel washers.

1. Finish: Plain Retain subparagraph below if applicable.
2. Direct-Tension Indicators: ASTM F 959, Type 325 (ASTM F 959M, Type 8.8,) compressible-washer type.

B. Headed Anchor Rods: ASTM F 1554, Grade 36.

1. Nuts: ASTM A 563 (ASTM A 563M) heavy hex carbon steel.
2. Plate Washers: ASTM A 36/A 36M carbon steel.
3. Washers: ASTM F 436 (ASTM F 436M) hardened carbon steel.
4. Finish: Hot-dip zinc coating, ASTM A 153/A 153M, Class C.

C. Threaded Rods ASTM A 36/A 36M

1. Nuts: ASTM A 563 (ASTM A 563M) heavy hex carbon steel.
2. Washers: ASTM F 436 (ASTM F 436M) hardened Finish: Plain
3. Finish: Hot-dip zinc coating, ASTM A 153/A 153M, Class C.

2.3 PRIMER

A. Primer: SSPC-Paint 25, Type I II, iron oxide, zinc oxide, raw linseed oil, and alkyd.

B. Galvanizing Repair Paint: ASTM A 780.

2.4 GROUT

A. Nonmetallic, Shrinkage-Resistant Grout: ASTM C 1107, factory-packaged, nonmetallic aggregate grout, noncorrosive, nonstaining, mixed with water to consistency suitable for application and a 30-minute working time.

2.5 FABRICATION

A. Structural Steel: Fabricate and assemble in shop to greatest extent possible. Fabricate according to AISC's "Code of Standard Practice for Steel Buildings and Bridges" and AISC's "Specification for Structural Steel Buildings--Allowable Stress Design and Plastic Design
1. Identify high-strength structural steel according to ASTM A 6/ A 6M and maintain markings until structural steel has been erected.
2. Mark and match-mark materials for field assembly.
3. Complete structural-steel assemblies, including welding of units, before starting shop-priming operations.

B. Thermal Cutting: Perform thermal cutting by machine to greatest extent possible.

1. Plane thermally cut edges to be welded to comply with requirements in AWS D1.1.

C. Bolt Holes: Cut, drill, mechanically thermal cut, or punch standard bolt holes perpendicular to metal surfaces.

D. Finishing: Accurately finish ends of columns and other members transmitting bearing loads.

E. Holes: Provide holes required for securing other work to structural steel and for passage of other work through steel framing members.

1. Cut, drill, or punch holes perpendicular to steel surfaces
2. Base-Plate Holes: Cut, drill, mechanically thermal cut, or punch holes perpendicular to steel surfaces.
3. Weld threaded nuts to framing and other specialty items indicated to receive other work.

2.6 SHOP CONNECTIONS

A. High-Strength Bolts: Shop install high-strength bolts according to RCSC's "Specification for Structural Joints Using ASTM A 325 or A 490 Bolts" for type of bolt and type of joint specified.

1. Joint Type: Snug tightened

B. Weld Connections: Comply with AWS D1.1 for welding procedure specifications, tolerances, appearance, and quality of welds and for methods used in correcting welding work.

1. Remove backing bars or runoff tabs, back gouge, and grind steel smooth.
2. Assemble and weld built-up sections by methods that will maintain true alignment of axes without exceeding tolerances of AISC's "Code of Standard Practice for Steel Buildings and Bridges" for mill material.
3. Verify that weld sizes, fabrication sequence, and equipment used for architecturally exposed structural steel will limit distortions to allowable tolerances

a. Grind butt welds flush.
b. Grind or fill exposed fillet welds to smooth profile. Dress exposed welds.

2.7 SHOP PRIMING

A. Shop prime steel surfaces except the following:

1. Surfaces embedded in concrete or mortar. Extend priming of partially embedded members to a depth of 2 inches (50 mm).
2. Surfaces to be field welded.
3. Galvanized surfaces.

B. Surface Preparation: Clean surfaces to be painted. Remove loose rust and mill scale and spatter, slag, or flux deposits. Prepare surfaces according to the following specifications and standards:
1. SSPC-SP 3, "Power Tool Cleaning."

C. Priming: Immediately after surface preparation, apply primer according to manufacturer's written instructions and at rate recommended by SSPC to provide a dry film thickness of not less than 1.5 mils (0.038 mm). Use priming methods that result in full coverage of joints, corners, edges, and exposed surfaces.

1. Stripe paint corners, crevices, bolts, welds, and sharp edges.
2. Apply two coats of shop paint to inaccessible surfaces after assembly or erection. Change color of second coat to distinguish it from first.

D. Painting: Apply a 1-coat, nonasphaltic primer complying with SSPC-PS Guide 7.00, "Painting System Guide 7.00: Guide for Selecting One-Coat Shop Painting Systems," to provide a dry film thickness of not less than 1.5 mils (0.038 mm).

2.8 GALVANIZING

A. Hot-Dip Galvanized Finish: Apply zinc coating by the hot-dip process to structural steel according to ASTM A 123/ A 123M.

1. Fill vent holes and grind smooth after galvanizing.
2. Galvanize lintels shelf angles attached to structural-steel frame and located in exterior walls.

2.9 SOURCE QUALITY CONTROL

A. Owner will engage an independent testing and inspecting agency to perform shop tests and inspections and prepare test reports.

1. Provide testing agency with access to places where structural-steel work is being fabricated or produced to perform tests and inspections.

B. Correct deficiencies in Work that test reports and inspections indicate does not comply with the Contract Documents.

C. Bolted Connections: Shop-bolted connections will be inspected according to RCSC's "Specification for Structural Joints Using ASTM A 325 or A 490 Bolts."

D. Welded Connections: In addition to visual inspection, shop-welded connections will be tested and inspected according to AWS D1.1 and the following inspection procedures, at testing agency's option:
   1. Ultrasonic Inspection: ASTM E 164.

PART 3 - EXECUTION

3.1 EXAMINATION

A. Verify elevations of masonry-bearing surfaces and locations of anchor rods, bearing plates, and other embedments, with steel erector present, for compliance with requirements.

B. Proceed with installation only after unsatisfactory conditions have been corrected.

3.2 PREPARATION

A. Provide temporary shores, guys, braces, and other supports during erection to keep structural steel secure, plumb, and in alignment against temporary construction loads and loads equal in intensity to design loads. Remove temporary supports when permanent structural steel, connections, and bracing are in place, unless otherwise indicated.

3.3 ERECTION

A. Set structural steel accurately in locations and to elevations indicated and according to AISC's "Code of Standard Practice for Steel Buildings and Bridges" and "Specification for Structural Steel Buildings--Allowable Stress Design and Plastic Design

B. Bearing Plates: Clean masonry-bearing surfaces of bond-reducing materials, and roughen surfaces prior to setting base plates. Clean bottom surface of base plates.

   1. Set bearing plates for structural members on wedges, shims, or setting nuts as required.
   2. Weld plate washers to top of base plate.
   3. Snug-tighten anchor rods after supported members have been positioned and plumbed. Do not remove wedges or shims but, if protruding, cut off flush with edge of base plate before packing with grout.

4. Promptly pack grout solidly between bearing surfaces and base plates so no voids remain. Neatly finish exposed surfaces; protect grout and allow to cure. Comply with manufacturer's written installation instructions for shrinkage-resistant grouts.

C. Maintain erection tolerances of structural steel within AISC's "Code of Standard Practice for Steel Buildings and Bridges."

D. Align and adjust various members forming part of complete frame or structure before permanently fastening. Before assembly, clean bearing surfaces and other surfaces that will be in permanent contact with members. Perform necessary adjustments to compensate for discrepancies in elevations and alignment.

1. Level and plumb individual members of structure.
2. Make allowances for difference between temperature at time of erection and mean temperature when structure is completed and in service.

E. Splice members only where indicated.

F. Do not use thermal cutting during erection unless approved by Architect. Finish thermally cut sections within smoothness limits in AWS D1.1.

G. Do not enlarge unfair holes in members by burning or using drift pins. Ream holes that must be enlarged to admit bolts.

3.4 FIELD CONNECTIONS

A. High-Strength Bolts: Install high-strength bolts according to RCSC's "Specification for Structural Joints Using ASTM A 325 or A 490 Bolts" for type of bolt and type of joint specified.

1. Joint Type: Snug tightened

B. Weld Connections: Comply with AWS D1.1 for welding procedure specifications, tolerances, appearance, and quality of welds and for methods used in correcting welding work.

1. Comply with AISC's "Code of Standard Practice for Steel Buildings and Bridges" and "Specification for Structural Steel Buildings--Allowable Stress Design and Plastic Design" for bearing, adequacy of temporary connections, alignment, and removal of paint on surfaces adjacent to field welds.
2. Remove backing bars or runoff tabs, back gouge, and grind steel smooth.
3. Assemble and weld built-up sections by methods that will maintain true alignment of axes without exceeding tolerances of AISC's "Code of Standard Practice for Steel Buildings and Bridges" for mill material.

3.5 FIELD QUALITY CONTROL

A. Testing Agency: Owner will engage a qualified structural engineering firm to perform special inspections and an independent testing and inspecting agency to inspect field welds and high-strength bolted connections. Inspections shall be performed in accordance with the Hampton Roads Schedule and Statement of Special Inspections.

B. Bolted Connections: Shop-bolted connections will be tested and inspected according to RCSC's "Specification for Structural Joints Using ASTM A 325 or A 490 Bolts."

C. Welded Connections: Field welds will be visually inspected according to AWS D1.1.

1. In addition to visual inspection, field welds will be tested according to AWS D1.1 and the following inspection procedures, at testing agency's option:
   a. Ultrasonic Inspection: ASTM E 164.

D. Correct deficiencies in Work that test reports and inspections indicate does not comply with the Contract Documents.

3.6 REPAIRS AND PROTECTION

A. Repair damaged galvanized coatings on galvanized items with galvanized repair paint according to ASTM A 780 and manufacturer's written instructions.

B. Touchup Painting: After installation, promptly clean, prepare, and prime or reprime field connections, rust spots, and abraded surfaces of prime-painted joists and accessories and abutting structural steel.

1. Clean and prepare surfaces by SSPC-SP 2 hand-tool cleaning or SSPC-SP 3 power-tool cleaning.
2. Apply a compatible primer of same type as shop primer used on adjacent surfaces.

C. Touchup Painting: Cleaning and touchup painting are specified in Division 09 painting Sections.

END OF SECTION 051200

THIS PAGE LEFT INTENTIONALLY BLANK

SECTION 053100 - STEEL DECKING

PART 1 - GENERAL

1.1 RELATED DOCUMENTS

A. Drawings and general provisions of the Contract, including General and Supplementary Conditions and Division 1 Specification Sections, apply to this Section.

1.2 SUMMARY

A. This Section includes the following:

1. Roof deck used to infill roof openings

1.3 SUBMITTALS

A. Product Data: For each type of deck, accessory, and product indicated.

B. Product Certificates: For each type of steel deck, signed by product manufacturer.

C. Field quality-control test and inspection reports.

D. Research/Evaluation Reports: For steel deck.

1.4 QUALITY ASSURANCE

A. AISI Specifications: Comply with calculated structural characteristics of steel deck according to AISI's "North American Specification for the Design of Cold-Formed Steel Structural Members."

B. FMG Listing: Provide steel roof deck evaluated by FMG and listed in its "Approval Guide, Building Materials" for Class 1-90 windstorm ratings.

1.5 DELIVERY, STORAGE, AND HANDLING

A. Protect steel deck from corrosion, deformation, and other damage during delivery, storage, and handling.

B. Stack steel deck on platforms or pallets and slope to provide drainage. Protect with a waterproof covering and ventilate to avoid condensation.

PART 2 - PRODUCTS

2.1 MANUFACTURERS

A. Available Manufacturers: Subject to compliance with requirements, manufacturers offering products that may be incorporated into the Work include, but are not limited to, the following:

1. Steel Deck:
   a. Nucor Corp.; Vulcraft Division.
   b. Roof Deck, Inc.
   c. United Steel Deck, Inc.
   d. Wheeling Corrugating Company; Div. of Wheeling-Pittsburgh Steel Corporation.

2.2 ROOF DECK

A. Steel Roof Deck: Fabricate panels, without top-flange stiffening grooves, to comply with "SDI Specifications and Commentary for Steel Roof Deck," in SDI Publication No. 30, and with the following:

1. Galvanized Steel Sheet: ASTM A 653/A 653M, Structural Steel (SS), Grade 33 (230), G90 (Z275) zinc coating.
2. Deck Profile: Type B.
3. Profile Depth: 1 1/2 inches (38 mm).
4. Design Uncoated-Steel Thickness: 20 gage.
5. Span Condition: As indicated.
6. Side Laps: Overlapped.

2.3 ACCESSORIES

A. General: Provide manufacturer's standard accessory materials for deck that comply with requirements indicated.

B. Side-Lap Fasteners: Corrosion-resistant, hexagonal washer head; self-drilling, carbon-steel screws, No. 10 (4.8-mm) minimum diameter.

C. Flexible Closure Strips: Vulcanized, closed-cell, synthetic rubber.

D. Miscellaneous Sheet Metal Deck Accessories: Steel sheet, minimum yield strength of 33,000 psi (230 MPa), not less than 0.0359-inch (0.91-mm) design uncoated

thickness, of same material and finish as deck; of profile indicated or required for application.

E. Galvanizing Repair Paint: ASTM A 780.

PART 3 - EXECUTION

3.1 EXAMINATION

A. Examine supporting frame and field conditions for compliance with requirements for installation tolerances and other conditions affecting performance.

3.2 INSTALLATION, GENERAL

A. Install deck panels and accessories according to applicable specifications and commentary in SDI Publication No. 30, manufacturer's written instructions, and requirements in this Section.

B. Locate deck bundles to prevent overloading of supporting members.

C. Place deck panels on supporting frame and adjust to final position with ends accurately aligned and bearing on supporting frame before being permanently fastened. Do not stretch or contract side-lap interlocks.

D. Place deck panels flat and square and fasten to supporting frame without warp or deflection.

E. Cut and neatly fit deck panels and accessories around openings and other work projecting through or adjacent to deck.

F. Provide additional reinforcement and closure pieces at openings as required for strength, continuity of deck, and support of other work.

G. Comply with AWS requirements and procedures for manual shielded metal arc welding, appearance and quality of welds, and methods used for correcting welding work.

3.3 ROOF-DECK INSTALLATION

A. Fasten roof-deck panels to steel supporting members by arc spot (puddle) welds of the surface diameter indicated or arc seam welds with an equal perimeter that is not less than 1-1/2 inches (38 mm) long, and as follows:

1. Weld Diameter: 5/8 inch (16 mm).
2. Weld Spacing: Weld edge and interior ribs of deck units with a minimum of two welds per deck unit at each support. Space welds 12 inches (305 mm) apart in the field of roof and 6 inches (150 mm) apart in roof corners and perimeter.

B. Side-Lap and Perimeter Edge Fastening: Fasten side laps and perimeter edges of panels between supports, at intervals not exceeding the lesser of 1/2 of the span or 8 inches (450 mm), and as follows:

1. Mechanically fasten with self-drilling, No. 10 (4.8-mm-) diameter or larger, carbon-steel screws.

C. Where securing to gypsum deck use fastener similar to “Lite-Deck” fastener by Olympic. Provide felt underlayment between gypsum deck to remain and metal deck.

D. End Bearing: Install deck ends over supporting frame with a minimum end bearing of 1-1/2 inches (38 mm), with end joints as follows:

1. End Joints: Lapped 2 inches (51 mm) minimum.

3.4 FIELD QUALITY CONTROL

A. Remove and replace work that does not comply with specified requirements.

B. Any additional inspecting, at Contractor's expense, will be performed to determine compliance of corrected work with specified requirements.

3.5 REPAIRS AND PROTECTION

A. Galvanizing Repairs: Prepare and repair damaged galvanized coatings on both surfaces of deck with galvanized repair paint according to ASTM A 780 and manufacturer's written instructions.

B. Provide final protection and maintain conditions to ensure that steel deck is without damage or deterioration at time of Substantial Completion.

END OF SECTION 053100

SECTION 054000 - COLD-FORMED METAL FRAMING

PART 1 - GENERAL

1.1 RELATED DOCUMENTS

A. Drawings and general provisions of the Contract, including General and Supplementary Conditions and Division 01 Specification Sections, apply to this Section.

1.2 SUMMARY

A. This Section includes the following:
   1. Exterior non-load-bearing wall framing.
   2. Cold-formed galvanized metal angles.
   3. Small-area pitched roof framing.

B. Related Sections include the following:

   1. Division 05 Section "Metal Fabrications" for masonry shelf angles and connections.
   2. Division 09 Section "Non-Structural Metal Framing" for interior non-load-bearing, metal-stud framing and ceiling-suspension assemblies.

1.3 PERFORMANCE REQUIREMENTS

A. Structural Performance: Provide cold-formed metal framing capable of withstanding design loads within limits and under conditions indicated.

   1. Design Loads: As follows:

      a. Dead Loads: Roof-10#/SF; Walls-7#/SF.
      b. Roof Loads: 20#/SF
      c. Snow Loads: 10#/SF
      d. Wind Loads: (3 Sec Gust) 110 MPH
      e. Seismic Loads: S_s=.15g;S_1=.05g; Soil Site Class D; Occupancy Category II

   2. Deflection Limits: Design framing systems to withstand design loads without deflections greater than the following:
      a. Exterior Non-Load-Bearing Framing: Horizontal deflection of 1/720 of the wall height.

3. Design framing systems to provide for movement of framing members without damage or overstressing, sheathing failure, connection failure, undue strain on fasteners and anchors, or other detrimental effects when subject to a maximum ambient temperature change of 120 deg F (67 deg C).
4. Design framing system to maintain clearances at openings, to allow for construction tolerances, and to accommodate live load deflection of primary building structure as follows:

   a. Upward and downward movement of 1/2 inch (13 mm).

B. Cold-Formed Steel Framing, General: Design according to AISI's "Standard for Cold-Formed Steel Framing - General Provisions."

1. Headers: Design according to AISI's "Standard for Cold-Formed Steel Framing - Header Design."
2. Design exterior non-load-bearing wall framing to accommodate horizontal deflection without regard for contribution of sheathing materials.

1.4 SUBMITTALS

A. Product Data: For each type of cold-formed metal framing product and accessory indicated.

B. Welding certificates.

C. Product Test Reports: From a qualified testing agency, unless otherwise stated, indicating that each of the following complies with requirements, based on evaluation of comprehensive tests for current products:

1. Steel sheet.
2. Expansion anchors.
3. Power-actuated anchors.
4. Mechanical fasteners.
5. Vertical deflection clips.
6. Horizontal drift deflection clips
7. Miscellaneous structural clips and accessories.

D. Research/Evaluation Reports: For cold-formed metal framing.

1.5 QUALITY ASSURANCE

A. Product Tests: Mill certificates or data from a qualified independent testing agency indicating steel sheet complies with requirements, including base-metal thickness, yield strength, tensile strength, total elongation, chemical requirements, and metallic-coating thickness.

B. Welding: Qualify procedures and personnel according to AWS D1.1/D1.1M, "Structural Welding Code--Steel," and AWS D1.3, "Structural Welding Code--Sheet Steel."

C. Fire-Test-Response Characteristics: Where indicated, provide cold-formed metal framing identical to that of assemblies tested for fire resistance per ASTM E 119 by a testing and inspecting agency acceptable to authorities having jurisdiction.

D. AISI Specifications and Standards: Comply with AISI's "North American Specification for the Design of Cold-Formed Steel Structural Members" and its "Standard for Cold-Formed Steel Framing - General Provisions."
   1. Comply with AISI's "Standard for Cold-Formed Steel Framing - Header Design."

1.6 DELIVERY, STORAGE, AND HANDLING

A. Protect cold-formed metal framing from corrosion, deformation, and other damage during delivery, storage, and handling.

B. Store cold-formed metal framing, protect with a waterproof covering, and ventilate to avoid condensation.

PART 2 - PRODUCTS

2.1 MANUFACTURERS

A. Available Manufacturers: Subject to compliance with requirements, manufacturers offering cold-formed metal framing that may be incorporated into the Work include, but are not limited to, the following:

B. Manufacturers: Subject to compliance with requirements, provide cold-formed metal framing by one of the following:
   1. Bostwick Steel Framing Co.
   2. Dale/Incor.
   3. Dietrich Metal Framing; a Worthington Industries Company.
   4. MarinoWare; a division of Ware Industries.
   5. Milcor Division, Inryco Inc.
   6. U. S. Gypsum Co.

2.2 MATERIALS

A. Steel Sheet: ASTM A 1003/A 1003M, Structural Grade, Type H, metallic coated, of grade and coating weight as follows:

   1. Grade: As required by structural performance.

2. Coating: G90 (Z275) or equivalent.

B. Steel Sheet for Vertical Deflection and Drift Clips: ASTM A 653/A 653M, structural steel, zinc coated, of grade and coating as follows:

1. Grade: As required by structural performance.
2. Coating: G90 (Z275).

2.3 FRAMING ACCESSORIES

A. Fabricate steel-framing accessories from steel sheet, ASTM A 1003/A 1003M, Structural Grade, Type H, metallic coated, of same grade and coating weight used for framing members.

B. Provide accessories of manufacturer's standard thickness and configuration, unless otherwise indicated, as follows:

1. Supplementary framing.
2. Bracing, bridging, and solid blocking.
3. Web stiffeners.
4. Anchor clips.
5. End clips.
6. Foundation clips.
7. Gusset plates.
8. Stud kickers, knee braces, and girts.
9. Joist hangers and end closures.
10. Hole reinforcing plates.
11. Backer plates.

2.4 ANCHORS, CLIPS, AND FASTENERS

A. Steel Shapes and Clips: ASTM A 36/A 36M, zinc coated by hot-dip process according to ASTM A 123/A 123M.

B. Anchor Bolts: ASTM F 1554, Grade 36, threaded carbon-steel headless, hooked bolts and carbon-steel nuts; and flat, hardened-steel washers; zinc coated by hot-dip process according to ASTM A 153/A 153M, Class C.

C. Expansion Anchors: Fabricated from corrosion-resistant materials, with capability to sustain, without failure, a load equal to 5 times design load, as determined by testing per ASTM E 488 conducted by a qualified independent testing agency.

D. Power-Actuated Anchors: Fastener system of type suitable for application indicated, fabricated from corrosion-resistant materials, with capability to sustain,

without failure, a load equal to 10 times design load, as determined by testing per ASTM E 1190 conducted by a qualified independent testing agency.

E. Mechanical Fasteners: ASTM C 1513, corrosion-resistant-coated, self-drilling, self-tapping steel drill screws.

1. Head Type: Low-profile head beneath sheathing, manufacturer's standard elsewhere.

F. Welding Electrodes: Comply with AWS standards.

2.5 MISCELLANEOUS MATERIALS

A. Galvanizing Repair Paint: SSPC-Paint 20 or DOD-P-21035.

B. Cement Grout: Portland cement, ASTM C 150, Type I; and clean, natural sand, ASTM C 404. Mix at ratio of 1 part cement to 2-1/2 parts sand, by volume, with minimum water required for placement and hydration.

C. Non-metallic, Non-shrink Grout: Premixed, nonmetallic, noncorrosive, non-staining grout containing selected silica sands, Portland cement, shrinkage-compensating agents, and plasticizing and water-reducing agents, complying with ASTM C 1107, with fluid consistency and 30-minute working time.

D. Shims: Load bearing, high-density multi-monomer plastic, non-leaching.

E. Sealer Gaskets: Closed-cell neoprene foam, 1/4 inch (6.4 mm) thick, selected from manufacturer's standard widths to match width of bottom track or rim track members.

2.6 FABRICATION

A. Fabricate cold-formed metal framing and accessories plumb, square, and true to line, and with connections securely fastened, according to referenced AISI's specifications and standards, manufacturer's written instructions, and requirements in this Section.

1. Fabricate framing assemblies using jigs or templates.
2. Cut framing members by sawing or shearing; do not torch cut.
3. Fasten cold-formed metal framing members by welding, screw fastening, clinch fastening, or riveting as standard with fabricator. Wire tying of framing members is not permitted.

a. Comply with AWS D1.3 requirements and procedures for welding, appearance and quality of welds, and methods used in correcting welding work.

b. Locate mechanical fasteners and install according to Shop Drawings, with screw penetrating joined members by not less than three exposed screw threads.

4. Fasten other materials to cold-formed metal framing by welding, bolting, or screw fastening, according to Shop Drawings.

B. Reinforce, stiffen, and brace framing assemblies to withstand handling, delivery, and erection stresses. Lift fabricated assemblies to prevent damage or permanent distortion.

C. Fabrication Tolerances: Fabricate assemblies level, plumb, and true to line to a maximum allowable tolerance variation of 1/8 inch in 10 feet (1:960) and as follows:

1. Spacing: Space individual framing members no more than plus or minus 1/8 inch (3 mm) from plan location. Cumulative error shall not exceed minimum fastening requirements of sheathing or other finishing materials.
2. Squareness: Fabricate each cold-formed metal framing assembly to a maximum out-of-square tolerance of 1/8 inch (3 mm).

PART 3 - EXECUTION

3.1 EXAMINATION

A. Examine supporting substrates and abutting structural framing for compliance with requirements for installation tolerances and other conditions affecting performance.

1. Proceed with installation only after unsatisfactory conditions have been corrected.

3.2 PREPARATION

A. Install load bearing shims or grout between the underside of wall bottom track or rim track and the top of foundation wall or slab at stud or joist locations to ensure a uniform bearing surface on supporting concrete or masonry construction.

B. Install sealer gaskets to isolate the underside of wall bottom track or rim track and the top of foundation wall or slab at stud or joist locations.

3.3 INSTALLATION, GENERAL

A. Cold-formed metal framing may be shop or field fabricated for installation, or it may be field assembled.

B. Install cold-formed metal framing according to AISI's "Standard for Cold-Formed Steel Framing - General Provisions" and to manufacturer's written instructions unless more stringent requirements are indicated.

C. Install shop- or field-fabricated, cold-formed framing and securely anchor to supporting structure.

1. Screw, bolt, or weld wall panels at horizontal and vertical junctures to produce flush, even, true-to-line joints with maximum variation in plane and true position between fabricated panels not exceeding 1/16 inch (1.6 mm).

D. Install cold-formed metal framing and accessories plumb, square, and true to line, and with connections securely fastened.

1. Cut framing members by sawing or shearing; do not torch cut.
2. Fasten cold-formed metal framing members by welding, screw fastening, clinch fastening, or riveting. Wire tying of framing members is not permitted.

a. Comply with AWS D1.3 requirements and procedures for welding, appearance and quality of welds, and methods used in correcting welding work.
b. Locate mechanical fasteners and install according to Shop Drawings, and complying with requirements for spacing, edge distances, and screw penetration.

E. Install framing members in one-piece lengths unless splice connections are indicated for track or tension members.

F. Install temporary bracing and supports to secure framing and support loads comparable in intensity to those for which structure was designed. Maintain braces and supports in place, undisturbed, until entire integrated supporting structure has been completed and permanent connections to framing are secured.

G. Do not bridge building expansion and control joints with cold-formed metal framing. Independently frame both sides of joints.

H. Install insulation, specified in Division 07 Section "Thermal Insulation," in built-up exterior framing members, such as headers, sills, boxed joists, and multiple studs at openings, that are inaccessible on completion of framing work.

I. Fasten hole reinforcing plate over web penetrations that exceed size of manufacturer's standard punched openings.

J. Erection Tolerances: Install cold-formed metal framing level, plumb, and true to line to a maximum allowable tolerance variation of 1/8 inch in 10 feet (1:960) and as follows:

1. Space individual framing members no more than plus or minus 1/8 inch (3 mm) from plan location. Cumulative error shall not exceed minimum fastening requirements of sheathing or other finishing materials.

3.4 LOAD-BEARING WALL INSTALLATION

A. Install continuous top and bottom tracks sized to match studs. Align tracks accurately and securely anchor at corners and ends, and at spacings as follows:

1. Anchor Spacing: 32 inches (813 mm).

B. Squarely seat studs against top and bottom tracks with gap not exceeding of 1/8 inch (3 mm) between the end of wall framing member and the web of track. Fasten both flanges of studs to top and bottom tracks. Space studs as follows:

1. Stud Spacing: 16 inches (406 mm).

C. Set studs plumb, except as needed for diagonal bracing or required for nonplumb walls or warped surfaces and similar configurations.

D. Align studs vertically where floor framing interrupts wall-framing continuity. Where studs cannot be aligned, continuously reinforce track to transfer loads.

E. Align floor and roof framing over studs. Where framing cannot be aligned, continuously reinforce track to transfer loads.

F. Anchor studs abutting structural columns or walls, including masonry walls, to supporting structure as indicated.

G. Install headers over wall openings wider than stud spacing. Locate headers above openings as indicated. Fabricate headers of compound shapes indicated or required to transfer load to supporting studs, complete with clip-angle connectors, web stiffeners, or gusset plates.

1. Frame wall openings with not less than a double stud at each jamb of frame as indicated on Shop Drawings. Fasten jamb members together to uniformly distribute loads.
2. Install runner tracks and jack studs above and below wall openings. Anchor tracks to jamb studs with clip angles or by welding, and space jack studs same as full-height wall studs.

H. Install supplementary framing, blocking, and bracing in stud framing indicated to support fixtures, equipment, services, casework, heavy trim, furnishings, and similar work requiring attachment to framing.

1. If type of supplementary support is not indicated, comply with stud manufacturer's written recommendations and industry standards in each case, considering weight or load resulting from item supported.

I. Install horizontal bridging in stud system, spaced as indicated on Shop Drawings. Fasten at each stud intersection.

J. Install steel sheet diagonal bracing straps to both stud flanges, terminate at and fasten to reinforced top and bottom tracks. Fasten clip-angle connectors to multiple studs at ends of bracing and anchor to structure.

K. Install miscellaneous framing and connections, including supplementary framing, web stiffeners, clip angles, continuous angles, anchors, and fasteners, to provide a complete and stable wall-framing system.

3.5 EXTERIOR NON-LOAD-BEARING WALL INSTALLATION

A. Install continuous tracks sized to match studs. Align tracks accurately and securely anchor to supporting structure as indicated.

B. Fasten both flanges of studs to[top and] bottom track, unless otherwise indicated. Space studs as follows:

1. Stud Spacing: 16 inches (406 mm).

C. Set studs plumb, except as needed for diagonal bracing or required for nonplumb walls or warped surfaces and similar requirements.

D. Isolate non-load-bearing steel framing from building structure to prevent transfer of vertical loads while providing lateral support.
1. Connect vertical deflection clips to bypassing studs and anchor to building structure.
2. Connect drift clips to cold formed metal framing and anchor to building structure.

E. Install horizontal bridging in wall studs, spaced in rows indicated on Shop Drawings but not more than 48 inches (1220 mm) apart. Fasten at each stud intersection.

F. Install miscellaneous framing and connections, including stud kickers, web stiffeners, clip angles, continuous angles, anchors, fasteners, and stud girts, to provide a complete and stable wall-framing system.

3.6 FIELD QUALITY CONTROL

A. Testing: Owner will engage a qualified independent testing and inspecting agency to perform field tests and inspections and prepare test reports.

B. Field and shop welds will be subject to testing and inspecting.

C. Testing agency will report test results promptly and in writing to Contractor and Architect.

D. Remove and replace work where test results indicate that it does not comply with specified requirements.

E. Additional testing and inspecting, at Contractor's expense, will be performed to determine compliance of replaced or additional work with specified requirements.

3.7 REPAIRS AND PROTECTION

A. Galvanizing Repairs: Prepare and repair damaged galvanized coatings on fabricated and installed cold-formed metal framing with galvanized repair paint according to ASTM A 780 and manufacturer's written instructions.

B. Provide final protection and maintain conditions, in a manner acceptable to manufacturer and Installer, so as to ensure that cold-formed metal framing is without damage or deterioration at time of Substantial Completion.

END OF SECTION 054000

SECTION 055000 - METAL FABRICATIONS

PART 1 - GENERAL

1.1 RELATED DOCUMENTS

A. Drawings and general provisions of the Contract, including General and Supplementary Conditions and Division 01 Specification Sections, apply to this Section.

1.2 SUMMARY

A. This Section includes the following:

1. Steel angle frames at parapets and eaves
2. Miscellaneous lintels at ductwork openings
3. Minor supports for cold-formed roof framing
4. Roof access ladders
5. Ladder/Duct Climb-over Platform
6. Cast metal downspout boots

B. Related Sections include the following:

1. Division 04 Section "Unit Masonry" for installing loose lintels, anchor bolts, and other items indicated to be built into unit masonry.
2. Division 07 Section “Sheet Metal Flashing and Trim” for coordination of cast metal downspout boots with sheet metal-formed downspouts.

1.3 SUBMITTALS

A. Shop Drawings: Show fabrication and installation details for metal fabrications.

1. Include plans, elevations, sections, and details of metal fabrications and their connections. Show anchorage and accessory items.
2. Provide templates for anchors and bolts specified for installation under other Sections.

B. Welding certificates.

1.4 QUALITY ASSURANCE

A. Welding: Qualify procedures and personnel according to the following:

1. AWS D1.1, "Structural Welding Code--Steel."

1.5 PROJECT CONDITIONS

A. Field Measurements: Verify actual locations of walls and other construction contiguous with metal fabrications by field measurements before fabrication and indicate measurements on Shop Drawings.

1. Established Dimensions: Where field measurements cannot be made without delaying the Work, establish dimensions and proceed with fabricating metal fabrications without field measurements. Coordinate wall and other contiguous construction to ensure that actual dimensions correspond to established dimensions.
2. Provide allowance for trimming and fitting at site.

1.6 COORDINATION

A. Coordinate installation of anchorages for metal fabrications. Furnish setting drawings, templates, and directions for installing anchorages, including sleeves, concrete inserts, anchor bolts, and items with integral anchors, that are to be embedded in concrete or masonry. Deliver such items to Project site in time for installation.

PART 2 - PRODUCTS

2.1 METALS, GENERAL

A. Metal Surfaces, General: Provide materials with smooth, flat surfaces, unless otherwise indicated. For metal fabrications exposed to view in the completed Work, provide materials without seam marks, roller marks, rolled trade names, or blemishes.

2.2 FERROUS METALS

A. Steel Plates, Shapes, and Bars: ASTM A 36/A 36M.

B. Steel Sheet: ASTM A 1003/A, Structural Grade, Type H, metallic coated, of grade and costing wight as follows:
1. Grade: As required by structural performance.
2. Coating: G90 or equivalent.

2.3 FASTENERS

A. General: Unless otherwise indicated, provide Type 304 stainless-steel fasteners for exterior use and zinc-plated fasteners with coating complying with ASTM B 633, Class Fe/Zn 5, at exterior walls. Provide stainless-steel fasteners for fastening aluminum. Select fasteners for type, grade, and class required.

B. Steel Bolts and Nuts: Regular hexagon-head bolts, ASTM A 307, Grade A ; with hex nuts, ASTM A 563 ; and, where indicated, flat washers.

C. Stainless-Steel Bolts and Nuts: Regular hexagon-head annealed stainless-steel bolts, nuts and, where indicated, flat washers; ASTM F 593 for bolts and ASTM F 594 for nuts, Alloy Group 1.

D. Anchor Bolts: ASTM F 1554, Grade 36.

1. Provide hot-dip or mechanically deposited, zinc-coated anchor bolts where item being fastened is indicated to be galvanized.

E. Eyebolts: ASTM A 489.

F. Machine Screws: ASME B18.6.3 .

G. Lag Bolts: ASME B18.2.1 .

H. Wood Screws: Flat head, ASME B18.6.1.

I. Plain Washers: Round, ASME B18.22.1 .

J. Lock Washers: Helical, spring type, ASME B18.21.1 .

K. Cast-in-Place Anchors in Concrete: Anchors capable of sustaining, without failure, a load equal to four times the load imposed, as determined by testing according to ASTM E 488, conducted by a qualified independent testing agency.

1. Threaded or wedge type; galvanized ferrous castings, either ASTM A 47/A 47M malleable iron or ASTM A 27/A 27M cast steel. Provide bolts, washers, and shims as needed, hot-dip galvanized per ASTM A 153/A 153M.

L. Expansion Anchors: Anchor bolt and sleeve assembly with capability to sustain, without failure, a load equal to six times the load imposed when installed in unit masonry and four times the load imposed when installed in concrete, as determined by testing according to ASTM E 488, conducted by a qualified independent testing agency.

1. Material for Anchors in Interior Locations: Carbon-steel components zinc-plated to comply with ASTM B 633, Class Fe/Zn 5.

2. Material for Anchors in Exterior Locations: Alloy Group 1 stainless-steel bolts complying with ASTM F 593 and nuts complying with ASTM F 594 .

2.4 METAL LADDERS

A. General:

1. Comply with ANSI A14.3 unless otherwise indicated.

B. Bar Grating: Welded Bar Grating, galvanized hot dipped, GW 100 Serrated, welded construction, 1" x 3/16" bearing bars, 1-3/16" on center, regular cross bars 4" on center, 36 inches wide. Provide at horizontal surface stepping over rooftop-mounted ductwork. Support on galvanized steel channels.

C. Steel Ladders:

1. Space siderails 18 inches (457 mm) apart unless otherwise indicated.
2. Siderails: Continuous, 1/2-by-2-1/2-inch (12.7-by-64-mm) steel flat bars, with eased edges.
3. Rungs: 3/4-inch- (19-mm-) diameter] [3/4-inch- (19-mm-) square steel bars.
4. Fit rungs in centerline of siderails; plug-weld and grind smooth on outer rail faces.
5. Provide nonslip surfaces on top of each rung, either by coating rung with aluminum-oxide granules set in epoxy-resin adhesive or by using a type of manufactured rung filled with aluminum-oxide grout.
6. Provide nonslip surfaces on top of each rung by coating with abrasive material metallically bonded to rung.
7. Provide platforms as indicated fabricated from welded or pressure-locked steel bar grating, supported by steel angles. Limit openings in gratings to no more than 1/2 inch (12 mm) in least dimension.
8. Support each ladder at top and bottom and not more than 60 inches (1500 mm) o.c. with welded or bolted steel brackets.
9. Galvanize exterior ladders, including platforms, brackets and fasteners.
10. After galvanizing, prime exterior ladders, including brackets and fasteners, with zinc-rich primer.

2.5 MISCELLANEOUS MATERIALS

A. Welding Rods and Bare Electrodes: Select according to AWS specifications for metal alloy welded.

B. Universal Shop Primer: Fast-curing, lead- and chromate-free, universal modified-alkyd primer complying with MPI#79.

1. Use primer with a VOC content of 420 g/L (3.5 lb/gal.) or less when calculated according to 40 CFR 59, Subpart D (EPA Method 24).
2. Use primer containing pigments that make it easily distinguishable from zinc-rich primer.

C. Zinc-Rich Primer: Complying with SSPC-Paint 20 or SSPC-Paint 29 and compatible with topcoat.

1. Use primer with a VOC content of 420 g/L (3.5 lb/gal.) or less when calculated according to 40 CFR 59, Subpart D (EPA Method 24).

D. Galvanizing Repair Paint: High-zinc-dust-content paint for regalvanizing welds in steel, complying with SSPC-Paint 20.

E. Bituminous Paint: Cold-applied asphalt emulsion complying with ASTM D 1187.

F. Concrete Materials and Properties: Comply with requirements in Division 03 Section "Cast-in-Place Concrete" for normal-weight, air-entrained, ready-mix concrete with a minimum 28-day compressive strength of 3000 psi , unless otherwise indicated.

2.6 FABRICATION, GENERAL

A. Shop Assembly: Preassemble items in the shop to greatest extent possible. Disassemble units only as necessary for shipping and handling limitations. Use connections that maintain structural value of joined pieces. Clearly mark units for reassembly and coordinated installation.

B. Cut, drill, and punch metals cleanly and accurately. Remove burrs and ease edges to a radius of approximately 1/32 inch , unless otherwise indicated. Remove sharp or rough areas on exposed surfaces.

C. Form bent-metal corners to smallest radius possible without causing grain separation or otherwise impairing work.

D. Form exposed work true to line and level with accurate angles and surfaces and straight edges.

E. Weld corners and seams continuously to comply with the following:

1. Use materials and methods that minimize distortion and develop strength and corrosion resistance of base metals.
2. Obtain fusion without undercut or overlap.
3. Remove welding flux immediately.

4. At exposed connections, finish exposed welds and surfaces smooth and blended so no roughness shows after finishing and contour of welded surface matches that of adjacent surface.

F. Form exposed connections with hairline joints, flush and smooth, using concealed fasteners where possible. Where exposed fasteners are required, use Phillips flat-head (countersunk) screws or bolts, unless otherwise indicated. Locate joints where least conspicuous.

G. Fabricate seams and other connections that will be exposed to weather in a manner to exclude water. Provide weep holes where water may accumulate.

H. Cut, reinforce, drill, and tap metal fabrications as indicated to receive finish hardware, screws, and similar items.

2.7 MISCELLANEOUS FRAMING AND SUPPORTS

A. General: Provide steel framing and supports not specified in other Sections as needed to complete the Work.

B. Fabricate units from steel shapes, plates, and bars of welded construction, unless otherwise indicated. Fabricate to sizes, shapes, and profiles indicated and as necessary to receive adjacent construction retained by framing and supports. Cut, drill, and tap units to receive hardware, hangers, and similar items.

C. Prime miscellaneous framing and supports with zinc-rich primer where indicated.

2.8 CAST METAL DOWNSPOUT BOOTS

A. General: Provide cast, 319 alloy aluminum downspout boots securely anchor-bolted to existing masonry walls. Extruded aluminum shall be made from 6063-T5 alloy base and heat treated. Provide for angled discharge of rainwater above grade onto precast concrete splashblocks. Provide integral cast lugs or tabs for secure attachment to walls at top and bottom, each side.

B. Manufacturers: Subject to compliance with requirements, provide products by one of the manufacturers specified or equal approved by Architect:

1. Barry Pattern and Foundry, B25D Pattern
2. Neenah Foundry Company, R-4929 Series

C. Materials

1. Downspout Adapter Body: Cast aluminum
2. Wall Fasteners: Stainless steel expansion bolts and washers

D. Size: Downspout boots shall be sized with receiver for 5 inch wide by 4 inch deep downspouts. Minimum length (or height) of boot shall be 3'-0"; maximum length shall be 3'-6".

2.9 FINISHES, GENERAL

A. Comply with NAAMM's "Metal Finishes Manual for Architectural and Metal Products" for recommendations for applying and designating finishes.

B. Finish metal fabrications after assembly.

C. Steel and Iron Finishes: Galvanizing: Hot-dip galvanize items as indicated to comply with applicable standard listed below:

1. ASTM A 123/A 123M, for galvanizing steel and iron products.
2. ASTM A 153/A 153M, for galvanizing steel and iron hardware.

D. Aluminum Finishes: Manufacturer's standard powder coat finish in color, to be selected by the Architect from standard available colors.

PART 3 - EXECUTION

3.1 INSTALLATION, GENERAL

A. Cutting, Fitting, and Placement: Perform cutting, drilling, and fitting required for installing metal fabrications. Set metal fabrications accurately in location, alignment, and elevation; with edges and surfaces level, plumb, true, and free of rack; and measured from established lines and levels.

B. Fit exposed connections accurately together to form hairline joints. Weld connections that are not to be left as exposed joints but cannot be shop welded because of shipping size limitations. Do not weld, cut, or abrade surfaces of exterior units that have been hot-dip galvanized after fabrication and are for bolted or screwed field connections.

C. Field Welding: Comply with the following requirements:

1. Use materials and methods that minimize distortion and develop strength and corrosion resistance of base metals.
2. Obtain fusion without undercut or overlap.
3. Remove welding flux immediately.

4. At exposed connections, finish exposed welds and surfaces smooth and blended so no roughness shows after finishing and contour of welded surface matches that of adjacent surface.

D. Fastening to In-Place Construction: Provide anchorage devices and fasteners where metal fabrications are required to be fastened to in-place construction. Provide threaded fasteners for use with concrete and masonry inserts, toggle bolts, through bolts, lag bolts, wood screws, and other connectors.

E. Provide temporary bracing or anchors in formwork for items that are to be built into concrete, masonry, or similar construction.

3.2 INSTALLING MISCELLANEOUS FRAMING AND SUPPORTS

A. General: Install framing and supports to comply with requirements of items being supported, including manufacturers' written instructions and requirements indicated on Shop Drawings.

3.3 ADJUSTING AND CLEANING

A. Touchup Painting: Cleaning and touchup painting of field welds, bolted connections, and abraded areas of shop paint are specified in Division 09 painting Sections.

B. Galvanized Surfaces: Clean field welds, bolted connections, and abraded areas and repair galvanizing to comply with ASTM A 780.

END OF SECTION 055000

SECTION 061000 - ROUGH CARPENTRY

PART 1 - GENERAL

1.1 RELATED DOCUMENTS:

A. Drawings and general provisions of Contract, including General and Supplementary Conditions and Division-1 Specification sections, apply to work of this section.

1.2 SUMMARY:

A. Types of work in this section include rough carpentry for:

1. Rooftop equipment blocking.
2. Wood nailers, cleats, eave and perimeter wood blocking.
3. Miscellaneous wood blocking for use at interior.
4. Treated plywood sheathing.

B. SUBMITTALS: Product Data: For each type of process and factory-fabricated product. Indicate component materials and dimensions and include construction and application details.

1. Include data for wood-preservative treatment from chemical treatment manufacturer and certification by treating plant that treated materials comply with requirements. Indicate type of preservative used and net amount of preservative retained.
2. Include data for fire-retardant treatment from chemical treatment manufacturer and certification by treating plant that treated materials comply with requirements. Include physical properties of treated materials based on testing by a qualified independent testing agency.
3. For products receiving a waterborne treatment, include statement that moisture content of treated materials was reduced to levels specified before shipment to Project site.
4. Include copies of warranties from chemical treatment manufacturers for each type of treatment.

A. Research/Evaluation Reports: For the following, showing compliance with building code in effect for Project:

1. Wood-preservative-treated wood.
2. Fire-retardant-treated wood.

1.3 PRODUCT HANDLING:

A. Delivery and Storage: Keep materials under cover and dry. Protect against exposure to weather and contact with damp or wet surfaces. Stack lumber as well as plywood and other panels; provide for air circulation within and around stacks and under temporary coverings including polyethylene and similar materials.

B. For lumber and plywood pressure treated with waterborne chemicals, sticker between each course to provide air circulation.

1.4 PROJECT CONDITIONS:

A. Coordination: Fit carpentry work to other work; scribe and cope as required for accurate fit. Correlate location of furring, nailers, blocking, grounds and similar supports to allow attachment of other work.

PART 2 - PRODUCTS

2.1 LUMBER, GENERAL:

A. Lumber Standards: Manufacture lumber to comply with PS 20 "American Softwood Lumber Standard" and with applicable grading rules of inspection agencies certified by American Lumber Standards Committee's (ALSC) Board of Review.

B. For exposed lumber apply grade stamps to ends or back of each piece, or omit grade stamps entirely and issue certificate of grade compliance from inspection agency in lieu of grade stamp.

1. Nominal sizes are indicated, except as shown by detail dimensions. Provide actual sizes as required by PS 20, for moisture content specified for each use.

2. Provide dressed lumber, S4S, unless otherwise indicated standard grade southern yellow pine.

3. Provide seasoned lumber with 19 percent maximum moisture content (S-Dry) after preservative treatment.

C. Plywood: DOC PS 1.

2.2 MISCELLANEOUS MATERIALS:

A. Fasteners and Anchorages: Provide size, type, material and finish as indicated and as recommended by applicable standards, complying with applicable Federal Specifications for nails, staples, screws, bolts, nuts, washers and anchoring devices. Provide metal hangers and framing anchors of the size and type recommended by the manufacturer for each use including recommended nails.

B. Where rough carpentry work is exposed to weather, in ground contact, or in area of high relative humidity, provide fasteners and anchorages with a hot-dip zinc coating (ASTM A 153).

2.3 WOOD-PRESERVATIVE-TREATED LUMBER

A. Preservative Treatment by Pressure Process: AWPA C2, except that lumber that is not in contact with the ground and is continuously protected from liquid water may be treated according to AWPA C31 with inorganic boron (SBX).

1. Preservative Chemicals: Acceptable to authorities having jurisdiction and containing no arsenic or chromium.

B. Kiln-dry lumber after treatment to a maximum moisture content of 19 percent. Do not use material that is warped or does not comply with requirements for untreated material.

C. Mark lumber with treatment quality mark of an inspection agency approved by the ALSC Board of Review.

D. Application: Treat all rough carpentry, unless otherwise indicated.

1. Wood nailers, curbs, equipment support bases, expansion joint framing, blocking, stripping, and similar members in connection with roofing, flashing, vapor barriers, and waterproofing.

2.4 FIRE-RETARDANT-TREATED MATERIALS

A. General: Comply with performance requirements in AWPA C20 (lumber) and AWPA C27 (plywood).

1. Use Exterior type for exterior locations and where indicated.
2. **Fire-retardant treat ALL concealed wood blocking for use at interior locations.**

B. Identify fire-retardant-treated wood with appropriate classification marking of testing and inspecting agency acceptable to authorities having jurisdiction.

2.5 DIMENSION LUMBER FRAMING

A. Preservative Treatment: Comply with applicable requirements of AWPA Standards C2 (Lumber) and of AWPB Standards listed below. Mark each treated item with the AWPB Quality Mark Requirements.

B. Plywood Blocking: APA rated sheathing, treated, marine grade with waterproof glue for use in conjunction with roof sheathing, thickness indicated on the drawings.

C. Inspect each piece of treated lumber or plywood after drying and discard damaged or defective pieces.

PART 3 - EXECUTION

3.1 INSTALLATION, GENERAL:

A. Discard units of material with defects, which might impair quality of work, and units, which are too small to use in fabricating work with minimum joints or optimum joint arrangement.

B. Set carpentry work to required levels and lines, with members plumb and true to line and cut and fitted.

C. Securely attach carpentry work to substrate by anchoring and fastening as shown and as required by recognized standards.

D. Countersink nail heads on exposed carpentry work and fill holes.

E. Use common wire nails, hot-dip galvanized where anchoring into other wood. Select fasteners of size that will not penetrate members where opposite side will be exposed to view or will receive finish materials. Make tight connections between members. Install fasteners without splitting of wood; predrill as required.

F. Use expansion on anchors when attaching to masonry or concrete and bolts or self-tapping screws where attaching to steel framing members.

3.2 WOOD NAILERS AND BLOCKING FOR CURBS:

A. For curbs and equipment bases, provide wood blocking under the base flange and anchor to the roof deck in thicknesses to allow base flashings at the curb to extend a minimum of 10" above the finished roof surface.

3.3 WOOD NAILERS AND BLOCKING

A. Provide wherever shown and where required to attachment of other work. Form to shapes as shown and cut as required for true line and level of work to be attached. Coordinate location with other work involved. **Where blocking abuts roof insulation, it shall match thickness of insulation**. Provide treated plywood and treated shims where required to bring blocking to proper level.

B. Attach to substrates as required to support applied loading and hold work securely in place. Countersink bolts and nuts flush with surfaces, unless otherwise indicated. When tying work into adjacent existing blocking to remain, overlap wood members to integrate with existing work.

END OF SECTION 061000

SECTION 061600 - SHEATHING

PART 1 - GENERAL

1.1 RELATED DOCUMENTS

A. Drawings and general provisions of the Contract, including General and Supplementary Conditions and Division 01 Specification Sections, apply to this Section.

1.2 SUMMARY

A. This Section includes the following:

1. Wall sheathing.
2. Building paper.

B. Related Sections include the following:

1. Division 06 Section "Rough Carpentry" for plywood roof blocking and marine-grade roof sheathing.

1.3 SUBMITTALS

A. Product Data: For each type of process and factory-fabricated product. Indicate component materials and dimensions and include construction and application details.

1.4 DELIVERY, STORAGE, AND HANDLING

A. Stack panels flat with spacers between each bundle to provide air circulation. Provide for air circulation around stacks and under coverings.

PART 2 - PRODUCTS

2.1 WALL SHEATHING

A. Plywood Wall Sheathing: Exterior sheathing.

1. Span Rating: Not less than 16/0.

2. Nominal Thickness: Not less than 1/2 inch (13 mm).

2.2 FASTENERS

A. General: Provide fasteners of size and type indicated that comply with requirements specified in this Article for material and manufacture.

1. For wall sheathing, provide fasteners of Type 304 stainless steel.

B. Nails, Brads, and Staples: ASTM F 1667.

C. Power-Driven Fasteners: NES NER-272.

D. Screws for Fastening Gypsum Sheathing to Cold-Formed Metal Framing: Steel drill screws, in length recommended by sheathing manufacturer for thickness of sheathing board to be attached, with organic-polymer or other corrosion-protective coating having a salt-spray resistance of more than 800 hours according to ASTM B 117.

1. For steel framing less than 0.0329 inch (0.835 mm) thick, attach sheathing to comply with ASTM C 1002.
2. For steel framing from 0.033 to 0.112 inch (0.84 to 2.84 mm) thick, attach sheathing to comply with ASTM C 954.

2.3 WEATHER-RESISTANT SHEATHING PAPER

A. Building Paper: ASTM D 226, Type 1 (No. 15 asphalt-saturated organic felt), unperforated.

PART 3 - EXECUTION

3.1 INSTALLATION, GENERAL

A. Do not use materials with defects that impair quality of sheathing or pieces that are too small to use with minimum number of joints or optimum joint arrangement.

B. Cut panels at penetrations, edges, and other obstructions of work; fit tightly against abutting construction, unless otherwise indicated.

C. Securely attach to substrate by fastening as indicated, complying with the following:

1. NES NER-272 for power-driven fasteners.
2. Table 2304.9.1, "Fastening Schedule," in ICC's "International Building Code."

D. Coordinate wall sheathing installation with flashing and joint-sealant installation so these materials are installed in sequence and manner that prevent exterior moisture from passing through completed assembly.

E. Do not bridge building expansion joints; cut and space edges of panels to match spacing of structural support elements.

F. Coordinate sheathing installation with installation of materials installed over sheathing so sheathing is not exposed to precipitation or left exposed at end of the workday when rain is forecast.

3.2 WOOD STRUCTURAL PANEL INSTALLATION

A. General: Comply with applicable recommendations in APA Form No. E30S, "Engineered Wood Construction Guide," for types of structural-use panels and applications indicated.

B. Fastening Methods: Fasten panels as indicated below:

1. Wall Sheathing:
   a. Nail or staple to wood framing.
   b. Screw to cold-formed metal framing.
   c. Space panels 1/8 inch (3 mm) apart at edges and ends.

3.3 WEATHER-RESISTANT SHEATHING-PAPER INSTALLATION

A. General: Cover sheathing with weather-resistant sheathing paper as follows:

1. Cut back barrier 1/2 inch (13 mm) on each side of the break in supporting members at expansion- or control-joint locations.
2. Apply barrier to cover vertical flashing with a minimum 4-inch (100-mm) overlap, unless otherwise indicated.

B. Building Paper: Apply horizontally with a 2-inch (50-mm) overlap and a 6-inch (150-mm) end lap; fasten to sheathing with galvanized staples or roofing nails.

3.4 SHEATHING JOINT-AND-PENETRATION TREATMENT

A. Seal sheathing joints according to sheathing manufacturer's written instructions.

1. Apply elastomeric sealant to joints and fasteners and trowel flat. Apply sufficient quantity of sealant to completely cover joints and fasteners after troweling. Seal other penetrations and openings.

END OF SECTION 061600

THIS PAGE LEFT INTENTIONALLY BLANK

SECTION 064023 - INTERIOR ARCHITECTURAL WOODWORK

PART 1 - GENERAL

1.1 RELATED DOCUMENTS

A. Drawings and general provisions of the Contract, including General and Supplementary Conditions and Division 01 Specification Sections, apply to this Section.

1.2 SUMMARY

A. This Section includes the following:
   1. Flush overlay plastic laminate casework.
   2. Plastic-laminate countertops.
   3. Shelving.
   4. Wood trim at Cafetorium ceiling soffit light cove to receive opaque finish.
   5. Shop finishing of interior woodwork.

B. Related Sections include the following:

   1. Division 06 Section 061000, "Rough Carpentry" for wood furring, blocking, shims, and hanging strips required for installing woodwork and concealed within other construction before woodwork installation.

1.3 DEFINITIONS

A. Interior architectural woodwork includes wood furring, blocking, shims, and hanging strips for installing woodwork items unless concealed within other construction before woodwork installation.

1.4 SUBMITTALS

A. Product Data: For panel products high-pressure decorative laminate adhesive for bonding plastic laminate and finishing materials and processes.

B. Shop Drawings: Show location of each item, dimensioned plans and elevations, large-scale details, attachment devices, and other components.

   1. Show details full size.
   2. Show locations and sizes of furring, blocking, and hanging strips, including concealed blocking and reinforcement specified in other Sections.

3. Show locations and sizes of cutouts and holes for items installed in architectural woodwork.

C. Samples for Initial Selection:

1. Shop-applied transparent finishes.
2. Plastic laminates.

D. Samples for Verification:

1. Lumber with or for transparent finish, not less than 50 sq. in. (300 sq. cm) species and cut, finished on 1 side and 1 edge.
2. Plastic laminates, 8 by 10 inches (200 by 250 mm), for each type, color, pattern, and surface finish.

E. Product Certificates: For each type of product, signed by product manufacturer.

F. Woodwork Quality Standard Compliance Certificates: AWI Quality Certification Program certificates.

G. Qualification Data: For fabricator.

1.5 QUALITY ASSURANCE

A. Fabricator Qualifications: Shop that employs skilled workers who custom-fabricate products similar to those required for this Project and whose products have a record of successful in-service performance. Shop is a certified participant in AWI's Quality Certification Program.

B. Quality Standard: Unless otherwise indicated, comply with AWI's "Architectural Woodwork Quality Standards" for grades of interior architectural woodwork indicated for construction, finishes, installation, and other requirements.

1. Provide AWI Quality Certification Program labels and certificates indicating that woodwork, including installation, complies with requirements of grades specified.

C. Fire-Test-Response Characteristics: Where fire-retardant materials or products are indicated, provide materials and products with specified fire-test-response characteristics as determined by testing identical products per test method indicated by UL, ITS, or another testing and inspecting agency acceptable to authorities having jurisdiction. Identify with appropriate markings of applicable testing and inspecting agency in the form of separable paper label or, where required by authorities having jurisdiction, imprint on surfaces of materials that will be concealed from view after installation.

1.6 DELIVERY, STORAGE, AND HANDLING

A. Do not deliver woodwork until painting and similar operations that could damage woodwork have been completed in installation areas. If woodwork must be stored in other than installation areas, store only in areas where environmental conditions comply with requirements specified in "Project Conditions" Article.

1.7 PROJECT CONDITIONS

A. Environmental Limitations: Do not deliver or install woodwork until building is enclosed, wet work is complete, and HVAC system is operating and maintaining temperature between 60 and 90 deg F (16 and 32 deg C) and relative humidity between 43 and 70 percent during the remainder of the construction period.

B. Field Measurements: Where woodwork is indicated to fit to other construction, verify dimensions of other construction by field measurements before fabrication, and indicate measurements on Shop Drawings. Coordinate fabrication schedule with construction progress to avoid delaying the Work.

1. Locate concealed framing, blocking, and reinforcements that support woodwork by field measurements before being enclosed, and indicate measurements on Shop Drawings.
2. Established Dimensions: Where field measurements cannot be made without delaying the Work, establish dimensions and proceed with fabricating woodwork without field measurements. Provide allowance for trimming at site, and coordinate construction to ensure that actual dimensions correspond to established dimensions.

1.8 COORDINATION

A. Coordinate sizes and locations of framing, blocking, furring, reinforcements, and other related units of Work specified in other Sections to ensure that interior architectural woodwork can be supported and installed as indicated.

PART 2 - PRODUCTS

2.1 MATERIALS

A. General: Provide materials that comply with requirements of AWI's quality standard for each type of woodwork and quality grade specified, unless otherwise indicated.

B. Wood Species and Cut for Transparent Finish: Plain sliced, select maple.

C. Wood Species for Opaque Finish: Poplar

D. Wood Products: Comply with the following:
   1. Hardboard: AHA A135.4.
   2. Veneer-Faced Panel Products (Hardwood Plywood): HPVA HP-1.

E. High-Pressure Decorative Laminate: NEMA LD 3, grades as indicated or, if not indicated, as required by woodwork quality standard.

   1. Available Manufacturers: Subject to compliance with requirements, manufacturers offering high-pressure decorative laminates that may be incorporated into the Work include, but are not limited to, the following:
      a. Formica Corporation.
      b. Lamin-Art, Inc.
      c. Nevamar Company, LLC; Decorative Products Div.
      d. Wilsonart International; Div. of Premark International, Inc.

2.2 CABINET HARDWARE AND ACCESSORIES

A. General: Provide cabinet hardware and accessory materials associated with architectural cabinets, except for items specified in Division 08 Section "Door Hardware (Scheduled by Describing Products)."

B. Shelf Rests: BHMA A156.9, B04013; metal.

C. Cabinet Door Hinges: BHMA A156.9, BO1521-3; Semi-concealed, “full wrap” overlay hinges, self-closing, 2-1/4 inches high, matte black finish. Provide minimum two hinges per door; provide hinges at 2’-0” on center vertically for cabinet doors over nominal 3’-0” high. Provide 1/4-inch overlay at intermediate joints (where one cabinet door edge abuts another) and 1/2-inch overlay at ends of cabinets. Provide similar to Stanley Hardware No. 1592

D. Drawer Extensions: BHMA A156.9, side-mounted, full extension ball-bearing guides, two per drawer.

   1. Use B05051 for drawers over 6 inches (150 mm) deep.

   2. Use B05052 for drawers 3 to 6 inches (75 to 150 mm) deep.

   3. Use B05053 for drawers less than 3 inches (75 mm) deep.

E. Cabinet Door and Drawer Pulls: Provide face-recessed metal flush handles; satin black matte finish. Provide for screw-mounting from back (concealed) side of door/drawer front. One per door/drawer face. Provide equal to Häfele Cat. No. 151.04.328.

F. Door/Drawer Silencers: ANSI A156.16, LO3011 or LO3031; two per door or drawer. Silencers set near top and bottom of jamb.

G. Coat Hooks: Three-pronged hanger for installation at underside of cabinet top, equal to Häfele Cat. No. 846.52.808.

H. Closet Bar: ANSI A156.16, L03131 chrome finish of required length.

I. Exposed Hardware Finishes: For exposed hardware, provide finish that complies with BHMA A156.18 for BHMA finish number indicated.

1. Unless stated otherwise, provide Satin Stainless Steel: BHMA 630.

2.3 MISCELLANEOUS MATERIALS

A. Furring, Blocking, Shims, and Hanging Strips: Softwood or hardwood lumber, kiln dried to less than 15 percent moisture content.

B. Adhesive for Bonding Plastic Laminate: Contact cement.

2.4 FABRICATION, GENERAL

A. Interior Woodwork Grade: Unless otherwise indicated, provide Custom-grade interior woodwork complying with referenced quality standard.

B. Wood Moisture Content: Comply with requirements of referenced quality standard for wood moisture content in relation to ambient relative humidity during fabrication and in installation areas.

C. Fabricate woodwork to dimensions, profiles, and details indicated. Ease edges to radius indicated for the following:

1. Corners of Cabinets and Edges of Solid-Wood (Lumber) Members 3/4 Inch (19 mm) Thick or Less: 1/16 inch (1.5 mm).

D. Complete fabrication, including assembly, finishing, and hardware application, to maximum extent possible before shipment to Project site. Disassemble components only as necessary for shipment and installation. Where necessary for fitting at site, provide ample allowance for scribing, trimming, and fitting.

1. Notify Architect seven days in advance of the dates and times woodwork fabrication will be complete.
2. Trial fit assemblies at fabrication shop that cannot be shipped completely assembled. Install dowels, screws, bolted connectors, and other fastening devices that can be removed after trial fitting. Verify that various parts fit as intended and check measurements of assemblies against field measurements indicated on Shop Drawings before disassembling for shipment.

E. Shop-cut openings to maximum extent possible to receive hardware, appliances, plumbing fixtures, electrical work, and similar items. Locate openings accurately and use templates or roughing-in diagrams to produce accurately sized and shaped openings. Sand edges of cutouts to remove splinters and burrs.

1. Seal edges of openings in countertops with a coat of varnish.

2.5 INTERIOR BACKSPLASHES AND COUNTER EDGE FOR TRANSPARENT FINISH

A. Grade: Custom.

B. Wood Species and Cut: Select maple, plain sawn.

C. For trim items wider than available lumber, use veneered construction. Do not glue for width.

D. Backout or groove backs of flat trim members and kerf backs of other wide, flat members, except for members with ends exposed in finished work.

2.7 UNFINISHED WOOD BOOK SHELVES

A. Grade: Economy.

B. AWI Type of Cabinet Construction: As indicated

C. Wood Species and Cut for Exposed Surfaces: Birch, plain sawn or sliced.

D. Provide back of 1/4-inch (6.4-mm) tempered hardboard.

2.8 PLASTIC-LAMINATE PANELS

A. Grade: Custom. Reveal Dimension: As indicated.

B. Laminate Cladding for Exposed Surfaces: High-pressure decorative laminate complying with the following requirements:
1. Vertical Surfaces: Grade VGS.
2. Edges: Grade VGS.

C. Colors, Patterns, and Finishes: Provide materials and products that result in colors and textures of exposed laminate surfaces complying with the following requirements:
1. As selected by Architect from laminate manufacturer's full range.

2.9 PLASTIC-LAMINATE COUNTERTOPS

A. Grade: Custom.

B. High-Pressure Decorative Laminate Grade: HGS.

C. Colors, Patterns, and Finishes: Provide materials and products that result in colors and textures of exposed laminate surfaces complying with the following requirements:
   1. As selected by Architect from manufacturer's full range.

C. Edge Treatment: Natural finished select white maple for natural finish.

D. Splashes: Natural finished select white maple plywood for natural finish with matching hardwood edge strips.

E. Core Material: A-C grade hardwood (Birch, Poplar or Maple) plywood made with exterior glue.

F. Adhesive for Bonding Plastic Laminate: Contact cement.

   1. Adhesive for Bonding Edges: Hot-melt adhesive or adhesive specified above for faces.

G. VOC Limits for Installation Adhesives and Sealants: Use products that comply with the following limits for VOC content when calculated according to 40 CFR 59, Subpart D (EPA Method 24):

   1. Wood Glues: 30 g/L.
   2. Multipurpose Construction Adhesives: 70 g/L.
   3. Structural Wood Member Adhesive: 140 g/L.
   4. Architectural Sealants: 250 g/L.

2.9 RUNNING TRIM AT CEILING SOFFIT COVE LIGHTING

A. Cove-molded trim, hardwood, shaped from 5/4-inch thick plain-sliced select birch or poplar. Field or shop-prime all edges, including cut surfaces.

2.10 FABRICATION

A. Shop cut openings to maximum extent possible to receive appliances, plumbing fixtures, electrical work, and similar items. Locate openings accurately and use templates or roughing-in diagrams to produce accurately sized and shaped openings. Sand edges of cutouts to remove splinters and burrs.

   1. Seal edges of openings in countertops with a coat of varnish.

2.11 SHOP FINISHING

A. Grade: Provide finishes of same grades as items to be finished.

B. General: Finish architectural woodwork at fabrication shop as specified in this Section. Defer only final touchup, cleaning, and polishing until after installation.

C. General: Shop finish transparent-finished interior architectural woodwork at fabrication shop as specified in this Section. Refer to Division 09 painting Sections for finishing opaque-finished architectural woodwork.

D. Preparation for Finishing: Comply with referenced quality standard for sanding, filling countersunk fasteners, sealing concealed surfaces, and similar preparations for finishing architectural woodwork, as applicable to each unit of work.

1. Backpriming: Apply one coat of sealer or primer, compatible with finish coats, to concealed surfaces of woodwork. Apply two coats to back of paneling and to end-grain surfaces. Concealed surfaces of plastic-laminate-clad woodwork do not require backpriming when surfaced with plastic laminate, backing paper, or thermoset decorative panels.

E. Transparent Finish:

1. Grade: Custom.
2. WI Finish System 5: Catalyzed polyurethane.
3. Staining: None required.
4. Sheen: Gloss, 61-100 gloss units measured on 60-degree gloss meter per ASTM D 523.

PART 3 - EXECUTION

3.1 PREPARATION

A. Before installation, condition woodwork to average prevailing humidity conditions in installation areas.

B. Before installing architectural woodwork, examine shop-fabricated work for completion and complete work as required, including removal of packing and backpriming.

3.2 INSTALLATION

A. Grade: Install woodwork to comply with requirements for the same grade specified in Part 2 for fabrication of type of woodwork involved.

B. Assemble woodwork and complete fabrication at Project site to comply with requirements for fabrication in Part 2, to extent that it was not completed in the shop.

C. Install woodwork level, plumb, true, and straight. Shim as required with concealed shims. Install level and plumb (including tops) to a tolerance of 1/8 inch in 96 inches (3 mm in 2400 mm).

D. Scribe and cut woodwork to fit adjoining work, refinish cut surfaces, and repair damaged finish at cuts.

E. Anchor woodwork to anchors or blocking built in or directly attached to substrates. Secure with countersunk, concealed fasteners and blind nailing as required for complete installation. Use fine finishing nails or finishing screws for exposed fastening, countersunk and filled flush with woodwork and matching final finish if transparent finish is indicated.

F. Standing and Running Trim: Install with minimum number of joints possible, using full-length pieces (from maximum length of lumber available) to greatest extent possible. Do not use pieces less than 36 inches (900 mm) long, except where shorter single-length pieces are necessary. Scarf running joints and stagger in adjacent and related members.

G. Fill gaps, if any, between top of base and wall with plastic wood filler, sand smooth, and finish same as wood base if finished.

H. Install standing and running trim with no more variation from a straight line than 1/8 inch in 96 inches (3 mm in 2400 mm).

I. Paneling: Anchor paneling to supporting substrate as detailed. Do not use face fastening, unless indicated.

1. Install flush paneling with no more than 1/16 inch in 96-inch (1.5 mm in 2400-mm) vertical cup or bow and 1/8 inch in 96-inch (3 mm in 2400-mm) horizontal variation from a true plane.

J. Bookshelves: Install without distortion so shelves fit openings properly and are accurately aligned. Complete installation of hardware and accessory items as indicated.

1. Install bookshelves with no more than 1/8 inch in 96-inch (3 mm in 2400-mm) sag, bow, or other variation from a straight line.

K. Fasten wall cabinets through back, near top and bottom, at ends and not more than 16 inches (400 mm) o.c.

L. Countertops: Anchor securely by screwing through supports into underside of countertop.

1. Install countertops with no more than 1/8 inch in 96-inch (3 mm in 2400-mm) sag, bow, or other variation from a straight line.
2. Secure backsplashes to walls with adhesive.
3. Calk space between backsplash and wall with sealant specified in Division 07 Section 079200, "Joint Sealants."

M. Running Trim at Ceiling Soffit Cove Lighting: Install in longest lengths practical and secure to substrate in straight, true and level line. Prime all surfaces prior to erecting, and fill all nail holes prior to finish painting. Field finish in accordance with Section 099123, “Interior Painting.”

N. Touch up finishing work specified in this Section after installation of woodwork. Fill nail holes with matching filler where exposed.

O. Refer to Division 09 Sections for final finishing of installed architectural woodwork not indicated to be shop finished.

3.3 ADJUSTING AND CLEANING

A. Repair damaged and defective woodwork, where possible, to eliminate functional and visual defects; where not possible to repair, replace woodwork. Adjust joinery for uniform appearance.

B. Clean, lubricate, and adjust hardware.

C. Clean woodwork on exposed and semi-exposed surfaces. Touch up shop-applied finishes to restore damaged or soiled areas.

END OF SECTION 064023

SECTION 071113 - BITUMINOUS DAMPPROOFING

PART 1 - GENERAL

1.1 RELATED DOCUMENTS

A. Drawings and general provisions of the Contract, including General and Supplementary Conditions and Division 01 Specification Sections, apply to this Section.

1.2 SUMMARY

A. This Section includes the following:

1. Cold-applied, cut-back asphalt dampproofing.

B. Related Sections include the following:

1. Division 04 “Unit Masonry”.

1.3 SUBMITTALS

A. Product Data: For each type of product indicated. Include recommendations for method of application, primer, number of coats, coverage or thickness, and protection course.

B. Material Certificates: For each product, signed by manufacturers.

1.4 QUALITY ASSURANCE

A. Source Limitations: Obtain primary dampproofing materials and primers through one source from a single manufacturer. Provide secondary materials recommended by manufacturer of primary materials.

1.5 PROJECT CONDITIONS

A. Weather Limitations: Proceed with installation only when existing and forecasted weather conditions permit dampproofing to be performed according to manufacturers' written instructions.

B. Ventilation: Provide adequate ventilation during application of dampproofing in enclosed spaces. Maintain ventilation until dampproofing has cured.

PART 2 - PRODUCTS

2.1 COLD-APPLIED, CUT-BACK ASPHALT DAMPPROOFING

A. Available Manufacturers: Subject to compliance with requirements, manufacturers offering products that may be incorporated into the Work include, but are not limited to, the following:

1. ChemMasters Corp.
2. Degussa Building Systems; Sonneborn Brand Products.
3. Gardner Gibson, Inc.
4. Henry Company.
5. Karnak Corporation.
6. Koppers Inc.
7. Malarkey Roofing Products.
8. Meadows, W. R., Inc.
9. Tamms Industries, Inc.

B. Brush and Spray Coats: ASTM D 4479, Type I, fibered or nonfibered.

2.2 MISCELLANEOUS MATERIALS

A. Cut-Back Asphalt Primer: ASTM D 41.

B. Emulsified-Asphalt Primer: ASTM D 1227, Type III, Class 1, except diluted with water as recommended by manufacturer.

C. Asphalt-Coated Glass Fabric: ASTM D 1668, Type I.

D. Patching Compound: Epoxy or latex-modified repair mortar of type recommended by dampproofing manufacturer.

PART 3 - EXECUTION

3.1 EXAMINATION

A. Examine substrates, with Installer present, for compliance with requirements for surface smoothness and other conditions affecting performance of work.

1. Proceed with dampproofing application only after substrate construction and penetrating work have been completed and unsatisfactory conditions have been corrected.
2. Test for surface moisture according to ASTM D 4263.

3.2 PREPARATION

A. Protection of Other Work: Mask or otherwise protect adjoining exposed surfaces from being stained, spotted, or coated with dampproofing. Prevent dampproofing materials from entering and clogging weep holes and drains.

B. Clean substrates of projections and substances detrimental to work; fill voids, seal joints, and apply bond breakers if any, as recommended by prime material manufacturer.

C. Apply patching compound for filling and patching tie holes, honeycombs, reveals, and other imperfections.

3.3 APPLICATION, GENERAL

A. Comply with manufacturer's written recommendations unless more stringent requirements are indicated or required by Project conditions to ensure satisfactory performance of dampproofing.

1. Apply additional coats if recommended by manufacturer or if required to achieve coverages indicated.
2. Allow each coat of dampproofing to cure six hours before applying subsequent coats.

B. Apply dampproofing to footings and foundation walls where opposite side of wall faces building interior.

1. Apply from finished-grade line to top of footing, extend over top of footing, and down a minimum of 6 inches over outside face of footing.
2. Extend 12 inches onto intersecting walls and footings, but do not extend onto surfaces exposed to view when Project is completed.
3. Install flashings and corner protection stripping at internal and external corners, changes in plane, construction joints, cracks, and where shown as "reinforced," by embedding an 8-inch- wide strip of asphalt-coated glass fabric in a heavy coat of dampproofing. Dampproofing coat for embedding fabric is in addition to other coats required.

C. Apply dampproofing to provide continuous plane of protection on exterior face of inner wythe of exterior masonry cavity walls.

1. Lap dampproofing at least 1/4 inch onto flashing, masonry reinforcement, veneer ties, and other items that penetrate inner wythe.
2. Extend dampproofing over outer face of structural members and concrete slabs that interrupt inner wythe, and lap dampproofing at least 1/4 inch onto shelf angles supporting veneer.

3.4 COLD-APPLIED, CUT-BACK ASPHALT DAMPPROOFING

A. On Exterior Face of Inner Wythe of Cavity Walls: Apply primer and 1 brush or spray coat at not less than 1 gal./100 sq. ft. .

3.5 CLEANING

A. Remove dampproofing materials from surfaces not intended to receive dampproofing.

END OF SECTION 071113

SECTION 072100 - THERMAL INSULATION

PART 1 - GENERAL

1.1 RELATED DOCUMENTS

A. Drawings and general provisions of the Contract, including General and Supplementary Conditions and Division 01 Specification Sections, apply to this Section.

1.2 SUMMARY

A. This Section includes the following:
   1. Rigid foam board wall insulation.
   2. Batt insulation.

B. Related Sections include the following:

   1. Division 04 Section "Unit Masonry" for insulation installed in cavity walls.
   2. Division 05 Section "Cold Formed Metal Framing" for installation in metal-framed assemblies of insulation specified by referencing this Section.

1.3 DEFINITIONS

A. Mineral-Fiber Insulation: Insulation composed of rock-wool fibers, slag-wool fibers, or glass fibers; produced in boards and blanket with latter formed into batts (flat-cut lengths) or rolls.

1.4 SUBMITTALS

A. Product Data: For each type of product indicated.

B. Product Test Reports: Based on evaluation of comprehensive tests performed by a qualified testing agency for insulation products.

1.5 QUALITY ASSURANCE

A. Source Limitations: Obtain each type of building insulation through one source from a single manufacturer.

B. Fire-Test-Response Characteristics: Provide insulation and related materials with the fire-test-response characteristics indicated, as determined by testing identical

products per test method indicated below by UL or another testing and inspecting agency acceptable to authorities having jurisdiction. Identify materials with appropriate markings of applicable testing and inspecting agency.

1. Surface-Burning Characteristics: ASTM E 84.
2. Fire-Resistance Ratings: ASTM E 119.
3. Combustion Characteristics: ASTM E 136.

1.6 DELIVERY, STORAGE, AND HANDLING

A. Protect insulation materials from physical damage and from deterioration by moisture, soiling, and other sources. Store inside and in a dry location. Comply with manufacturer's written instructions for handling, storing, and protecting during installation.

B. Protect plastic insulation as follows:

1. Do not expose to sunlight, except to extent necessary for period of installation and concealment.
2. Protect against ignition at all times. Do not deliver plastic insulating materials to Project site before installation time.
3. Complete installation and concealment of plastic materials as rapidly as possible in each area of construction.

PART 2 - PRODUCTS

2.1 MANUFACTURERS

A. In other Part 2 articles where titles below introduce lists, the following requirements apply to product selection:
1. Available Manufacturers: Subject to compliance with requirements, manufacturers offering products that may be incorporated into the Work include, but are not limited to, manufacturers specified.

2.2 FOAM-PLASTIC BOARD INSULATION

A. Extruded-Polystyrene Board Insulation: ASTM C 578, of type and density indicated below, with maximum flame-spread and smoke-developed indexes of 75 and 450, respectively:

1. Available Manufacturers:

a. DiversiFoam Products.
b. Dow Chemical Company.

c. Owens Corning.
d. Pactiv Building Products Division.

2. Type IV, 1.60 lb/cu. ft. (26 kg/cu. m): at masonry cavity walls; and on exterior walls behind metal siding.

2.3 MINERAL WOOL BATT OR BLANKET INSULATION

A. Available Manufacturers:

1. CertainTeed Corporation.
2. Roxul, Inc.
3. Johns Manville.
4. Thermafiber.
5. Owens Corning.

B. Faced, Mineral-Wool Blanket Insulation: Non-combustible, ASTM C 665, Type I (mineral wool blankets with reflective membrane facing), Class A (membrane-faced surface with a flame-spread index of 25 or less); Category 1 (membrane is a vapor barrier), faced with foil-scrim vapor-retarder membrane on 1 face.

C. Where batt or blanket insulation is indicated by the following thicknesses, provide blankets in batt or roll form with thermal resistances indicated:
1. 3-5/8 inches thick with a thermal resistance of R13.
2. 6 inches thick with a thermal resistance of R19.
3. 9 inches thick with a thermal resistance of R30.

2.4 AUXILIARY INSULATING MATERIALS

D. Vapor-Retarder Tape: Pressure-sensitive tape of type recommended by insulation manufacturers for sealing joints and penetrations in vapor-retarder facings.

E. Adhesive for Bonding Insulation: Product with demonstrated capability to bond insulation securely to substrates indicated without damaging insulation and substrates.
a. Gemco; Tuff Bond Hanger Adhesive.

PART 3 - EXECUTION

3.1 EXAMINATION

A. Examine substrates and conditions, with Installer present, for compliance with requirements of Sections in which substrates and related work are specified and for other conditions affecting performance.

1. Proceed with installation only after unsatisfactory conditions have been corrected.

3.2 PREPARATION

A. Clean substrates of substances harmful to insulation or vapor retarders, including removing projections capable of puncturing vapor retarders or of interfering with insulation attachment.

3.3 INSTALLATION, GENERAL

A. Comply with insulation manufacturer's written instructions applicable to products and application indicated.

B. Install insulation that is undamaged, dry, and unsoiled and that has not been left exposed at any time to ice, rain, and snow.

C. Extend insulation in thickness indicated to envelop entire area to be insulated. Cut and fit tightly around obstructions and fill voids with insulation. Remove projections that interfere with placement.

D. Water-Piping Coordination: If water piping is located within insulated exterior walls, coordinate location of piping to ensure that it is placed on warm side of insulation and insulation encapsulates piping.

E. For preformed insulating units, provide sizes to fit applications indicated and selected from manufacturer's standard thicknesses, widths, and lengths. Apply single layer of insulation units to produce thickness indicated unless multiple layers are otherwise shown or required to make up total thickness.

3.4 INSTALLATION OF CAVITY-WALL INSULATION

A. On units of foam-plastic board insulation, install pads of adhesive spaced approximately 24 inches o.c. both ways on inside face, and as recommended by manufacturer. Fit courses of insulation between wall ties and other obstructions, with edges butted tightly in both directions. Press units firmly against inside substrates indicated.

1. Supplement adhesive attachment of insulation by securing boards with two-piece wall ties designed for this purpose and specified in Division 04 Section "Unit Masonry."

3.5 INSTALLATION OF WALL INSULATION BEHIND METAL SIDING

A. Apply insulation units to substrates by method indicated, complying with manufacturer's written instructions. If no specific method is indicated, bond units to substrate with adhesive or use mechanical anchorage to provide permanent placement and support of units.

B. Seal joints between foam-plastic insulation units and between foam plastic insulation units and fiber cement furring by applying adhesive, mastic, or sealant to edges of each unit to form a tight seal as units are shoved into place. Fill voids in completed installation with adhesive, mastic, or sealant as recommended by insulation manufacturer.

3.7 INSTALLATION OF GENERAL BUILDING INSULATION

C. Apply insulation units to substrates by method indicated, complying with manufacturer's written instructions. If no specific method is indicated, bond units to substrate with adhesive or use mechanical anchorage to provide permanent placement and support of units.

D. Seal joints between foam-plastic insulation units by applying adhesive, mastic, or sealant to edges of each unit to form a tight seal as units are shoved into place. Fill voids in completed installation with adhesive, mastic, or sealant as recommended by insulation manufacturer.

E. Install mineral-wool insulation in cavities formed by framing members according to the following requirements:

1. Use insulation widths and lengths that fill the cavities formed by framing members. If more than one length is required to fill cavity, provide lengths that will produce a snug fit between ends.
2. Place insulation in cavities formed by framing members to produce a friction fit between edges of insulation and adjoining framing members.
3. Maintain 3-inch clearance of insulation around recessed lighting fixtures.
4. Install eave ventilation troughs between roof framing members in insulated attic spaces at vented eaves.
5. For wood-framed construction, install mineral-fiber blankets according to ASTM C 1320 and as follows:
   a. With faced blankets having stapling flanges, lap blanket flange over flange of adjacent blanket to maintain continuity of vapor retarder once finish material is installed over it.

3.8 PROTECTION

A. Protect installed insulation from damage due to harmful weather exposures, physical abuse, and other causes. Provide temporary coverings or enclosures

where insulation is subject to abuse and cannot be concealed and protected by permanent construction immediately after installation.

END OF SECTION 072100

SECTION 074113 - METAL ROOF PANELS

PART 1 - GENERAL

1.1 RELATED DOCUMENTS

A. Drawings and general provisions of the Contract, including General and Supplementary Conditions and Division 01 Specification Sections, apply to this Section.

1.2 SUMMARY

A. Section Includes:
   1. Standing-seam metal roof panels.

B. Related Sections:

   1. Section 053100 "Steel Decking" for steel roof deck supporting metal roof panels.
   2. Section 054000 "Cold-Formed Metal Framing" for cold-formed metal framing supporting metal roof panels.
   3. Section 074213 "Metal Wall Panels" for factory-formed metal soffit panels.
   4. Section 076200 "Sheet Metal Flashing and Trim" for field-formed fasciae, copings, flashings, roof drainage systems, and other sheet metal work not part of metal roof panel assemblies.
   5. Section 079200 "Joint Sealants" for field-applied sealants not otherwise specified in this Section.

1.3 DEFINITIONS

A. Metal Roof Panel Assembly: Metal roof panels, attachment system components, miscellaneous metal framing, thermal insulation, and accessories necessary for a complete weathertight roofing system.

1.4 PERFORMANCE REQUIREMENTS

A. General Performance: Metal roof panels shall comply with performance requirements without failure due to defective manufacture, fabrication, installation, or other defects in construction.

B. Air Infiltration: Air leakage through assembly of not more than 0.06 cfm/sq. ft. (0.3 L/s per sq. m) of roof area when tested according to ASTM E 283 at the following test-pressure difference:

1. Test-Pressure Difference: Negative 1.57 lbf/sq. ft. (75 Pa).

C. Water Penetration: No water penetration when tested according to ASTM E 1331 at the following test-pressure difference:

1. Test-Pressure Difference: 15 lbf/sq. ft.

D. Hydrostatic-Head Resistance: No water penetration when tested according to ASTM E 2140.

E. Wind-Uplift Resistance: Provide metal roof panel assemblies that comply with UL 580 for wind-uplift-resistance class indicated.

1. Uplift Rating: UL 90.

F. Structural Performance: Provide metal roof panel assemblies capable of withstanding the effects of gravity loads and the following loads and stresses within limits and under conditions indicated, based on testing according to ASTM E 1592:

1. Wind Loads: Determine loads based on the following minimum design wind pressures:

a. Uniform pressure of 40 lbf/sq. ft. , acting inward or outward.

2. Snow Loads: 25 lbf/sq. ft. (1197 Pa).
3. Deflection Limits: Metal roof panel assemblies shall withstand wind and snow loads with vertical deflections no greater than 1/240 of the span.

G. Thermal Movements: Allow for thermal movements resulting from ambient and surface temperature changes. Base calculations on surface temperatures of materials due to both solar heat gain and nighttime-sky heat loss.

1. Temperature Change (Range): 120 deg F (67 deg C), ambient; 180 deg F (100 deg C), material surfaces.

1.5 ACTION SUBMITTALS

A. Product Data: For each type of product indicated. Include construction details, material descriptions, dimensions of individual components and profiles, and finishes for each type of roof panel and accessory.

B. Shop Drawings: Show fabrication and installation layouts of metal roof panels; details of edge conditions, side-seam and endlap joints, panel profiles, corners, anchorages, trim, flashings, closures, and accessories; and special details. Distinguish between factory- and field-assembled work.

1. Accessories: Include details of the following items, at a scale of not less than 1-1/2 inches per 12 inches (1:10):

   a. Flashing and trim.
   b. Gutters.
   c. Downspouts.
   d. Roof curbs.
   e. Snow guards.

C. Samples for Initial Selection: For each type of metal roof panel indicated with factory-applied color finishes.

   1. Include similar Samples of trim and accessories involving color selection.

D. Samples for Verification: For each type of exposed finish required, prepared on Samples of size indicated below:

   1. Metal Roof Panels: 12 inches (300 mm) long by actual panel width. Include fasteners, clips, closures, and other metal roof panel accessories.
   2. Trim and Closures: 12 inches (300 mm) long. Include fasteners and other exposed accessories.
   3. Accessories: 12-inch- (300-mm-) long Samples for each type of accessory.

1.6 INFORMATIONAL SUBMITTALS

A. Coordination Drawings: Roof plans, drawn to scale, on which the following are shown and coordinated with each other, based on input from installers of the items involved:

   1. Roof panels and attachments.
   2. Purlins and rafters.
   3. Roof-mounted items including roof hatches, equipment supports, pipe supports and penetrations, lighting fixtures, snow guards, and items mounted on roof curbs.

B. Manufacturer Certificates: Signed by manufacturer certifying that roof panels comply with energy performance requirements specified in "Performance Requirements" Article.

   1. Submit evidence of meeting performance requirements.

C. Qualification Data: For qualified Installer.

D. Material Certificates: For thermal insulation and vapor retarders, from manufacturer.

E. Product Test Reports: Based on evaluation of comprehensive tests performed by a qualified testing agency, for each product.

F. Field quality-control reports.

G. Warranties: Samples of special warranties.

1.7 CLOSEOUT SUBMITTALS

A. Maintenance Data: For metal roof panels to include in maintenance manuals.

1.8 QUALITY ASSURANCE

A. Installer Qualifications: An employer of workers trained and approved by manufacturer.

B. Source Limitations: Obtain each type of metal roof panels from single source from single manufacturer.

C. Surface-Burning Characteristics: Provide metal roof panels having insulation core material with the following surface-burning characteristics as determined by testing identical products according to ASTM E 84 by a qualified testing agency. Identify products with appropriate markings of applicable testing agency.

1. Flame-Spread Index: 25 or less.
2. Smoke-Developed Index: 450 or less.

D. Preinstallation Conference: Conduct conference at project site.

1. Meet with Owner, Architect, Owner's insurer if applicable, testing and inspecting agency representative, metal roof panel Installer, metal roof panel manufacturer's representative, deck Installer, and installers whose work interfaces with or affects metal roof panels including installers of roof accessories and roof-mounted equipment.
2. Review and finalize construction schedule and verify availability of materials, Installer's personnel, equipment, and facilities needed to make progress and avoid delays.
3. Review methods and procedures related to metal roof panel installation, including manufacturer's written instructions.
4. Examine deck substrate conditions for compliance with requirements, including flatness and attachment to structural members.
5. Review structural loading limitations of deck during and after roofing.
6. Review flashings, special roof details, roof drainage, roof penetrations, equipment curbs, and condition of other construction that will affect metal roof panels.

7. Review governing regulations and requirements for insurance, certificates, and testing and inspecting if applicable.
8. Review temporary protection requirements for metal roof panel assembly during and after installation.
9. Review roof observation and repair procedures after metal roof panel installation.
10. Document proceedings, including corrective measures and actions required, and furnish copy of record to each participant.

1.9 DELIVERY, STORAGE, AND HANDLING

A. Deliver components, sheets, metal roof panels, and other manufactured items so as not to be damaged or deformed. Package metal roof panels for protection during transportation and handling.

B. Unload, store, and erect metal roof panels in a manner to prevent bending, warping, twisting, and surface damage.

C. Stack metal roof panels on platforms or pallets, covered with suitable weathertight and ventilated covering. Store metal roof panels to ensure dryness. Do not store metal roof panels in contact with other materials that might cause staining, denting, or other surface damage.

D. Protect strippable protective covering on metal roof panels from exposure to sunlight and high humidity, except to extent necessary for period of metal roof panel installation.

E. Protect foam-plastic insulation as follows:

1. Do not expose to sunlight, except to extent necessary for period of installation and concealment.
2. Protect against ignition at all times. Do not deliver foam-plastic insulation materials to Project site before installation time.
3. Complete installation and concealment of plastic materials as rapidly as possible in each area of construction.

1.10 PROJECT CONDITIONS

A. Weather Limitations: Proceed with installation only when existing and forecasted weather conditions permit metal roof panel work to be performed according to manufacturer's written instructions and warranty requirements.

B. Field Measurements: Verify actual dimensions of construction contiguous with metal roof panels by field measurements before fabrication.

1.11 COORDINATION

A. Coordinate sizes and locations of roof curbs, equipment supports, and roof penetrations with actual equipment provided.

B. Coordinate metal roof panels with rain drainage work, flashing, trim, and construction of decks, parapets, walls, and other adjoining work to provide a leakproof, secure, and noncorrosive installation.

1.12 WARRANTY

A. Special Warranty: Manufacturer's standard form in which manufacturer agrees to repair or replace metal roof panel assemblies that fail in materials or workmanship within specified warranty period.

1. Failures include, but are not limited to, the following:

a. Structural failures including rupturing, cracking, or puncturing.
b. Deterioration of metals, metal finishes, and other materials beyond normal weathering.

2. Warranty Period: Two years from date of Substantial Completion.

B. Special Warranty on Panel Finishes: Manufacturer's standard form in which manufacturer agrees to repair finish or replace metal roof panels that show evidence of deterioration of factory-applied finishes within specified warranty period.

1. Exposed Panel Finish: Deterioration includes, but is not limited to, the following:

a. Color fading more than 5 Hunter units when tested according to ASTM D 2244.
b. Chalking in excess of a No. 8 rating when tested according to ASTM D 4214.
c. Cracking, checking, peeling, or failure of paint to adhere to bare metal.

2. Finish Warranty Period: 20 years from date of Substantial Completion.

C. Special Weathertightness Warranty for Standing-Seam Metal Roof Panels: Manufacturer's standard form in which manufacturer agrees to repair or replace standing-seam metal roof panel assemblies that fail to remain weathertight, including leaks, within specified warranty period.

1. Warranty Period: 20 years from date of Substantial Completion.

PART 2 - PRODUCTS

2.1 PANEL MATERIALS

A. Aluminum Sheet: Coil-coated sheet, ASTM B 209 (ASTM B 209M), alloy as standard with manufacturer, with temper as required to suit forming operations and structural performance required.

1. Surface: Smooth, flat finish.
2. Exposed Coil-Coated Finish:

   a. 2-Coat Fluoropolymer: AAMA 620. Fluoropolymer finish containing not less than 70 percent PVDF resin by weight in color coat. Prepare, pretreat, and apply coating to exposed metal surfaces to comply with coating and resin manufacturers' written instructions.

3. Concealed Finish: Apply pretreatment and manufacturer's standard white or light-colored acrylic or polyester backer finish, consisting of prime coat and wash coat with a minimum total dry film thickness of 0.5 mil (0.013 mm).

B. Panel Sealants:

1. Sealant Tape: Pressure-sensitive, 100 percent solids, gray polyisobutylene compound sealant tape with release-paper backing. Provide permanently elastic, nonsag, nontoxic, nonstaining tape 1/2 inch (13 mm) wide and 1/8 inch (3 mm) thick.
2. Joint Sealant: ASTM C 920; elastomeric polyurethane, polysulfide, or silicone sealant; of type, grade, class, and use classifications required to seal joints in metal roof panels and remain weathertight; and as recommended in writing by metal roof panel manufacturer.
3. Butyl-Rubber-Based, Solvent-Release Sealant: ASTM C 1311.

2.2 FIELD-INSTALLED THERMAL INSULATION

A. Polyethylene Vapor Retarders: ASTM D 4397, 6 mils (0.15 mm) thick, with maximum permeance rating of 0.13 perm (7.5 ng/Pa x s x sq. m).

B. Faced, Polyisocyanurate Board Insulation: ASTM C 1289, Type II, Class 1 or 2 felt or glass-fiber mat, Grade 3, with maximum flame-spread and smoke-developed indexes of 75 and 450, respectively, based on tests performed on unfaced core.

C. Mineral-Fiber-Blanket Insulation: ASTM C 665, type indicated below; consisting of fibers manufactured from glass, slag wool, or rock wool.

1. Type I (blankets without membrane covering), passing ASTM E 136 for combustion characteristics.
2. Type II (blankets with nonreflective membrane covering), Category 1 (membrane is a vapor retarder), Class A (membrane-faced surface with a flame-spread index of 25 or less).
3. Type III (blankets with reflective membrane covering), Category 1 (membrane is a vapor retarder), Class A (membrane-faced surface with a flame-spread index of 25 or less).

2.3 UNDERLAYMENT MATERIALS

A. Self-Adhering, High-Temperature Sheet: 30 to 40 mils (0.76 to 1.0 mm) thick minimum, consisting of slip-resisting, polyethylene-film top surface laminated to layer of butyl or SBS-modified asphalt adhesive, with release-paper backing; cold applied. Provide primer when recommended by underlayment manufacturer.

1. Thermal Stability: Stable after testing at 240 deg F (116 deg C); ASTM D 1970.
2. Low-Temperature Flexibility: Passes after testing at minus 20 deg F (29 deg C); ASTM D 1970.
3. Products: Subject to compliance with requirements, available products that may be incorporated into the Work include, but are not limited to, the following:

a. Carlisle Coatings & Waterproofing Inc., Div. of Carlisle Companies Inc.; CCW WIP 300HT.
b. Grace Construction Products; a unit of Grace, W. R. & Co.; Ultra.
c. Henry Company; Blueskin PE200 HT.
d. Metal-Fab Manufacturing, LLC; MetShield.
e. Owens Corning; WeatherLock Metal High Temperature Underlayment.

B. Slip Sheet: Manufacturer's recommended slip sheet, of type required for application.

2.4 SUBSTRATE BOARDS

A. High density Polyisocyanurate Board per ASTM C1289, 1/4 inch (6 mm) thick

1. Products: Subject to compliance with requirements, available products that may be incorporated into the Work include, but are not limited to, the following:

a. Johns Manville; Invinsa Board

B. Board Fasteners: Factory-coated steel fasteners and metal or plastic plates complying with corrosion-resistance provisions in FMG 4470, designed for fastening substrate board to substrate.

2.5 MISCELLANEOUS METAL FRAMING

A. Miscellaneous Metal Framing, General: ASTM C 645, cold-formed metallic-coated steel sheet, ASTM A 653/A 653M, G40 (Z120) hot-dip galvanized or coating with equivalent corrosion resistance unless otherwise indicated.

B. Fasteners for Miscellaneous Metal Framing: Of type, material, size, corrosion resistance, holding power, and other properties required to fasten miscellaneous metal framing members to substrates.

2.6 MISCELLANEOUS MATERIALS

A. Panel Fasteners: Self-tapping screws, bolts, nuts, self-locking rivets and bolts, end-welded studs, and other suitable fasteners designed to withstand design loads. Provide exposed fasteners with heads matching color of metal roof panels by means of plastic caps or factory-applied coating. Provide EPDM, PVC, or neoprene sealing washers.

B. Bituminous Coating: Cold-applied asphalt mastic, SSPC-Paint 12, compounded for 15-mil (0.4-mm) dry film thickness per coat. Provide inert-type noncorrosive compound free of asbestos fibers, sulfur components, and other deleterious impurities.

2.7 STANDING-SEAM METAL ROOF PANELS

A. General: Provide factory-formed metal roof panels designed to be installed by lapping and interconnecting raised side edges of adjacent panels with joint type indicated and mechanically attaching panels to supports using concealed clips in side laps. Include clips, cleats, pressure plates, and accessories required for weathertight installation.

1. Aluminum Panel Systems: Unless more stringent requirements are indicated, comply with ASTM E 1637.

2. Wind Uplift: Comply with UL-90 test or Factory Mutual I-90 certified rating.

B. Vertical-Rib, Snap-Joint, Standing-Seam Metal Roof Panels: Formed with vertical ribs at panel edges and flat pan between ribs; designed for sequential installation by mechanically attaching panels to supports using concealed clips located under

one side of panels and engaging opposite edge of adjacent panels, and snapping panels together.

1. Manufacturers: Subject to compliance with requirements, available manufacturers offering products that may be incorporated into the Work include, but are not limited to, the following:
2. Basis-of-Design Product: Subject to compliance with requirements, provide "Snap-Clad" by the Petersen Aluminum Company or comparable product by one of the following:

   a. Met-Fab Manufacturing, LLC., "Snap-On 675."
   b. Englert, Inc., S2000 Series.
   c. Centria, SDP175 Panels.

3. Material: Aluminum sheet, 0.040 inch (1.02 mm) thick.

   a. Exterior Finish: 2-coat fluoropolymer.
   b. Color: As selected by Architect from manufacturer's full range.

4. Clips: Fixed.
   a. Material: 0.025-inch- (0.64-mm-) thick, stainless-steel sheet.

5. Panel Coverage: 16 inches (406 mm).
6. Panel Height: 1.75 inches (44 mm).

2.8 ACCESSORIES

A. Roof Panel Accessories: Provide components approved by roof panel manufacturer and as required for a complete metal roof panel assembly including trim, copings, fasciae, corner units, ridge closures, clips, flashings, sealants, gaskets, fillers, closure strips, and similar items. Match material and finish of metal roof panels unless otherwise indicated.

   1. Closures: Provide closures at eaves and ridges, fabricated of same metal as metal roof panels.
   2. Closure Strips: Closed-cell, expanded, cellular, rubber or crosslinked, polyolefin-foam or closed-cell laminated polyethylene; minimum 1-inch- (25-mm-) thick, flexible closure strips; cut or premolded to match metal roof panel profile. Provide closure strips where indicated or necessary to ensure weathertight construction.
   3. Backing Plates: Provide metal backing plates at panel end splices, fabricated from material recommended by manufacturer.

B. Flashing and Trim: Formed from same material as roof panels, pre-painted with coil coating, minimum **0.032 inch** thick. Provide flashing and trim as required to seal against weather and to provide finished appearance. Locations include, but are

not limited to, eaves, rakes, corners, bases, framed openings, ridges, fasciae, and fillers. Finish flashing and trim with same finish system as adjacent metal roof panels.

C. Gutters: Formed from same material roof panels. Match profile of gable trim, complete with end pieces, outlet tubes, and other special pieces as required. Fabricate in minimum 96-inch- (2400-mm-) long sections, of size and metal thickness according to SMACNA's "Architectural Sheet Metal Manual." Furnish gutter supports spaced a maximum of 36 inches (900 mm) o.c., fabricated from same metal as gutters. Provide wire ball strainers of compatible metal at outlets. Finish gutters to match metal roof panels.

D. Downspouts: Formed from same material as roof panels. Fabricate in 10-foot- (3-m-) long sections, complete with formed elbows and offsets, of size and metal thickness according to SMACNA's "Architectural Sheet Metal Manual". Finish downspouts to match gutters.

2.9 SNOW GUARDS

A. Snow Guards: Prefabricated, noncorrosive units designed to be installed without penetrating metal roof panels, and complete with predrilled holes, clamps, or hooks for anchoring.

1. Seam-Mounted, Bar-Type Snow Guards: Aluminum rods or bars held in place by stainless-steel clamps attached to vertical ribs of standing-seam metal roof panels.

a. Aluminum Finish: Clear anodized.
b. Products: Subject to compliance with requirements, available products that may be incorporated into the Work include, but are not limited to, the following:

1) LMCurbs; S5 ColorGard
2) Metal Roof Innovations, Ltd.; S5 ColorGard
3) TRA-MAGE, Inc.; C-2-1-Z Clamp-On Fence

2.10 FABRICATION

A. Fabricate and finish metal roof panels and accessories at the factory to greatest extent possible, by manufacturer's standard procedures and processes and as necessary to fulfill indicated performance requirements. Comply with indicated profiles and with dimensional and structural requirements.

B. Provide panel profile, including major ribs and intermediate stiffening ribs, if any, for full length of panel.

C. Fabricate metal roof panel side laps with factory-installed captive gaskets or separator strips that provide a tight seal and prevent metal-to-metal contact, in a manner that will seal weathertight and minimize noise from movements within panel assembly.

D. Sheet Metal Accessories: Fabricate flashing and trim to comply with recommendations in SMACNA's "Architectural Sheet Metal Manual" that apply to the design, dimensions, metal, and other characteristics of item indicated.

1. Form exposed sheet metal accessories that are without excessive oil canning, buckling, and tool marks and that are true to line and levels indicated, with exposed edges folded back to form hems.
2. End Seams for Aluminum: Fabricate nonmoving seams with flat-lock seams. Form seams and seal with epoxy seam sealer. Rivet joints for additional strength.
3. End Seams for Other Than Aluminum: Fabricate nonmoving seams with flat-lock seams. Tin edges to be seamed, form seams, and solder.
4. Sealed Joints: Form nonexpansion but movable joints in metal to accommodate elastomeric sealant to comply with SMACNA standards.
5. Conceal fasteners and expansion provisions where possible. Exposed fasteners are not allowed on faces of accessories exposed to view.
6. Fabricate cleats and attachment devices of size and metal thickness recommended by SMACNA's "Architectural Sheet Metal Manual" or by metal roof panel manufacturer for application, but not less than thickness of metal being secured.

2.11 FINISHES

A. Comply with NAAMM's "Metal Finishes Manual for Architectural and Metal Products" for recommendations for applying and designating finishes.

B. Protect mechanical and painted finishes on exposed surfaces from damage by applying a strippable, temporary protective covering before shipping.

C. Appearance of Finished Work: Noticeable variations in same piece are not acceptable. Variations in appearance of adjoining components are acceptable if they are within the range of approved Samples and are assembled or installed to minimize contrast.

PART 3 - EXECUTION

3.1 EXAMINATION

A. Examine substrates, areas, and conditions, with Installer present, for compliance with requirements for installation tolerances, metal roof panel supports, and other conditions affecting performance of the Work.

B. Examine primary and secondary roof framing to verify that rafters, purlins, angles, channels, and other structural panel support members and anchorages have been installed within alignment tolerances required by metal roof panel manufacturer.

C. Examine solid roof sheathing to verify that sheathing joints are supported by framing or blocking and that installation is within flatness tolerances required by metal roof panel manufacturer.

D. Examine roughing-in for components and systems penetrating metal roof panels to verify actual locations of penetrations relative to seam locations of metal roof panels before metal roof panel installation.

E. Proceed with installation only after unsatisfactory conditions have been corrected.

3.2 PREPARATION

A. Clean substrates of substances harmful to insulation, including removing projections capable of interfering with insulation attachment.

B. Substrate Board: Install substrate boards over roof deck or insulation on entire roof surface. Attach with substrate-board fasteners.

1. Install substrate board with long joints in continuous straight lines, perpendicular to roof slopes with end joints staggered between rows. Tightly butt substrate boards together.
2. Comply with UL requirements for fire-rated construction.

3.3 UNDERLAYMENT INSTALLATION

A. Self-Adhering Sheet Underlayment: Apply primer if required by manufacturer. Comply with temperature restrictions of underlayment manufacturer for installation. Apply at locations indicated on Drawings, wrinkle free, in shingle fashion to shed water, and with end laps of not less than 6 inches (150 mm) staggered 24 inches (600 mm) between courses. Overlap side edges not less than 3-1/2 inches (90 mm). Extend underlayment into gutter trough. Roll laps with roller. Cover underlayment within 14 days.

1. Apply over entire roof surface.

B. Apply slip sheet over underlayment before installing metal roof panels.

C. Install flashings to cover underlayment to comply with requirements specified in Section 076200 "Sheet Metal Flashing and Trim."

3.4 THERMAL INSULATION INSTALLATION

A. Polyethylene Vapor Retarder: Extend vapor retarder to extremities of areas to be protected from vapor transmission. Repair tears or punctures immediately before concealment by other work.

B. Board Insulation: Extend insulation in thickness indicated to cover entire roof. Comply with installation requirements in Section 072100 "Thermal Insulation."

C. Blanket Insulation: Install insulation concurrently with metal roof panel installation, in thickness indicated to cover entire roof, according to manufacturer's written instructions and as follows:

a. Between-Purlin Installation: Extend insulation and vapor retarder between purlins. Carry vapor-retarder facing tabs up and over purlin, overlapping adjoining facing of next insulation course maintaining continuity of retarder. Hold in place with bands and crossbands below insulation.

3.5 METAL ROOF PANEL INSTALLATION, GENERAL

A. Provide metal roof panels of full length from eave to ridge unless otherwise indicated or restricted by shipping limitations.

B. Thermal Movement. Rigidly fasten metal roof panels to structure at one and only one location for each panel. Allow remainder of panel to move freely for thermal expansion and contraction. Predrill panels for fasteners.

1. Point of Fixity: Fasten each panel along a single line of fixing located at ridge.
2. Avoid attaching accessories through roof panels in a manner that will inhibit thermal movement.

C. Install metal roof panels as follows:

1. Commence metal roof panel installation and install minimum of 300 sq. ft. (27.8 sq. m.) in presence of factory-authorized representative.
2. Field cutting of metal panels by torch is not permitted.
3. Provide metal closures at rake edges rake walls and each side of ridge caps.

4. Flash and seal metal roof panels with weather closures at eaves, rakes, and perimeter of all openings.
5. Install ridge caps as metal roof panel work proceeds.
6. Install metal flashing to allow moisture to run over and off metal roof panels.

D. Fasteners:
1. Aluminum Roof Panels: Use aluminum or stainless-steel fasteners for surfaces exposed to the exterior and aluminum or galvanized-steel fasteners for surfaces exposed to the interior.

E. Anchor Clips: Anchor metal roof panels and other components of the Work securely in place, using manufacturer's approved fasteners according to manufacturers' written instructions.

F. Metal Protection: Where dissimilar metals will contact each other or corrosive substrates, protect against galvanic action by painting contact surfaces with bituminous coating, by applying rubberized-asphalt underlayment to each contact surface, or by other permanent separation as recommended by metal roof panel manufacturer.

1. Coat back side of roof panels with bituminous coating where roof panels will contact wood, ferrous metal, or cementitious construction.

G. Joint Sealers: Install gaskets, joint fillers, and sealants where indicated and where required for weatherproof performance of metal roof panel assemblies. Provide types of gaskets, fillers, and sealants indicated or, if not indicated, types recommended by metal roof panel manufacturer.

1. Seal metal roof panel end laps with double beads of tape or sealant, full width of panel. Seal side joints where recommended by metal roof panel manufacturer.

3.6 METAL ROOF PANEL INSTALLATION

A. Standing-Seam Metal Roof Panels: Fasten metal roof panels to supports with concealed clips at each standing-seam joint at location, spacing, and with fasteners recommended by manufacturer.

1. Install clips to supports with self-tapping fasteners.
2. Install pressure plates at locations indicated in manufacturer's written installation instructions.
3. Snap Joint: Nest standing seams and fasten together by interlocking and completely engaging factory-applied sealant.

3.7 ACCESSORY INSTALLATION

A. General: Install accessories with positive anchorage to building and weathertight mounting and provide for thermal expansion. Coordinate installation with flashings and other components.

1. Install components required for a complete metal roof panel assembly including trim, copings, ridge closures, seam covers, flashings, sealants, gaskets, fillers, closure strips, and similar items.

B. Flashing and Trim: Comply with performance requirements, manufacturer's written installation instructions, and SMACNA's "Architectural Sheet Metal Manual." Provide concealed fasteners where possible, and set units true to line and level as indicated. Install work with laps, joints, and seams that will be permanently watertight and weather resistant.

1. Install exposed flashing and trim that is without excessive oil canning, buckling, and tool marks and that is true to line and levels indicated, with exposed edges folded back to form hems. Install sheet metal flashing and trim to fit substrates and to result in waterproof and weather-resistant performance.
2. Expansion Provisions: Provide for thermal expansion of exposed flashing and trim. Space movement joints at a maximum of 10 feet (3 m) with no joints allowed within 24 inches (600 mm) of corner or intersection. Where lapped expansion provisions cannot be used or would not be sufficiently weather resistant and waterproof, form expansion joints of intermeshing hooked flanges, not less than 1 inch (25 mm) deep, filled with mastic sealant (concealed within joints).

C. Gutters: Join sections with riveted and soldered or lapped and sealed joints. Attach gutters to eave with gutter hangers spaced not more than 36 inches (914 mm) o.c. using manufacturer's standard fasteners. Provide end closures and seal watertight with sealant. Provide for thermal expansion.

D. Downspouts: Join sections with telescoping joints. Provide fasteners designed to hold downspouts securely 1 inch (25 mm) away from walls; locate fasteners at top and bottom and at approximately 60 inches (1500 mm) o.c. in between.

1. Provide elbows at base of downspouts to direct water away from building.

3.8 SNOW GUARD INSTALLATION

A. Bar-Type Snow Guards: Attach bar supports to vertical ribs of standing-seam metal roof panels with clamps or set screws. Do not use fasteners that will penetrate metal roof panels.

1. Provide 1 row of snow guards, 6-inches, up from gutter.

3.9 ERECTION TOLERANCES

A. Installation Tolerances: Shim and align metal roof panel units within installed tolerance of 1/4 inch in 20 feet (6 mm in 6 m) on slope and location lines as indicated and within 1/8-inch (3-mm) offset of adjoining faces and of alignment of matching profiles.

3.10 FIELD QUALITY CONTROL

A. Manufacturer's Field Service: Engage a factory-authorized service representative to inspect metal roof panel installation, including accessories. Report results in writing.

B. Remove and replace applications of metal roof panels where inspections indicate that they do not comply with specified requirements.

C. Additional inspections, at Contractor's expense, will be performed to determine compliance of replaced or additional work with specified requirements.

3.11 CLEANING

A. Remove temporary protective coverings and strippable films, if any, as metal roof panels are installed unless otherwise indicated in manufacturer's written installation instructions. On completion of metal roof panel installation, clean finished surfaces as recommended by metal roof panel manufacturer. Maintain in a clean condition during construction.

B. Replace metal roof panels that have been damaged or have deteriorated beyond successful repair by finish touchup or similar minor repair procedures.

END OF SECTION 074113

THIS PAGE LEFT INTENTIONALLY BLANK

SECTION 074213 - METAL WALL PANELS

PART 1 - GENERAL

1.1 RELATED DOCUMENTS

A. Drawings and general provisions of the Contract, including General and Supplementary Conditions and Division 01 Specification Sections, apply to this Section.

1.2 SUMMARY

A. Section Includes:

1. Concealed-Fastener, Lap-Seam Metal Wall Panels

B. Related Sections:

1. Division 05 Section "Cold-Formed Metal Framing" for support framing, including girts, studs, and bracing.
2. Division 07 Section "Sheet Metal Flashing and Trim" for flashing and other sheet metal work that is not part of metal wall panel assemblies.

1.3 DEFINITION

A. Metal Wall Panel Assembly: Metal wall panels, attachment system components, miscellaneous metal framing, thermal insulation, and accessories necessary for a complete weathertight wall system.

1.4 PERFORMANCE REQUIREMENTS

A. General Performance: Metal wall panel assemblies shall comply with performance requirements without failure due to defective manufacture, fabrication, installation, or other defects in construction.

B. Delegated Design: Design metal wall panel assembly, including comprehensive engineering analysis by a qualified professional engineer, using performance requirements and design criteria indicated.

C. Air Infiltration: Air leakage through assembly of not more than 0.06 cfm/sq. ft. (0.3 L/s per sq. m) of wall area when tested according to ASTM E 283 at the following test-pressure difference:

1. Test-Pressure Difference: 1.57 lbf/sq. ft. (75 Pa).

D. Water Penetration under Static Pressure: No water penetration when tested according to ASTM E 331 at the following test-pressure difference:

1. Test-Pressure Difference: 6.24 lbf/sq. ft. (300 Pa).

E. Water Penetration under Dynamic Pressure: No evidence of water leakage when tested according to AAMA 501.1 under dynamic pressure equal to 20 percent of inward-acting, wind-load design pressure of not less than 6.24 lbf/sq. ft. (300 Pa) and not more than 12 lbf/sq. ft. (575 Pa).

1. Water Leakage: As defined according to AAMA 501.1.
2. Water Leakage: Uncontrolled water infiltrating the system or appearing on system's normally exposed interior surfaces from sources other than condensation. Water controlled by flashing and gutters that is drained back to the exterior and cannot damage adjacent materials or finishes is not water leakage.

F. Structural Performance: Provide metal wall panel assemblies capable of withstanding the effects the following loads and stresses within limits and under conditions indicated, based on testing according to ASTM E 1592:

1. Wind Loads: Determine loads based on the following minimum design wind pressures:

   a. Uniform pressure of 20 lbf/sq. ft. (957 Pa) acting inward or outward.
   b. Uniform pressure as indicated on Drawings.

2. Deflection Limits: Metal wall panel assemblies shall withstand wind loads with horizontal deflections no greater than [1/180] [1/240] <Insert deflection> of the span.

G. Thermal Movements: Allow for thermal movements from ambient and surface temperature changes by preventing buckling, opening of joints, overstressing of components, failure of joint sealants, failure of connections, and other detrimental effects. Base calculations on surface temperatures of materials due to both solar heat gain and nighttime-sky heat loss.

1. Temperature Change (Range): 120 deg F (67 deg C), ambient; 180 deg F (100 deg C), material surfaces.

1.5 SUBMITTALS

A. Product Data: For each type of product indicated. Include construction details, material descriptions, dimensions of individual components and profiles, and finishes for each type of wall panel and accessory.

B. Shop Drawings: Show fabrication and installation layouts of metal wall panels; details of edge conditions, joints, panel profiles, corners, anchorages, attachment system, trim, flashings, closures, and accessories; and special details. Distinguish between factory-, shop- and field-assembled work.

1. Accessories: Include details of the following items, at a scale of not less than 1-1/2 inches per 12 inches (1:10):

a. Flashing and trim.
b. Anchorage systems.

C. Samples for Initial Selection: For each type of metal wall panel indicated with factory-applied color finishes.

1. Include similar Samples of trim and accessories involving color selection.
2. Include manufacturer's color charts consisting of strips of cured sealants showing the full range of colors available for each sealant exposed to view.

D. Samples for Verification: For each type of exposed finish required, prepared on Samples of size indicated below.

1. Metal Wall and Soffit Panels: 12 inches (305 mm) long by actual panel width. Include fasteners, closures, and other metal wall panel accessories.
2. Trim and Closures: 12 inches (305 mm) long. Include fasteners and other exposed accessories.
3. Accessories: 12-inch- (305-mm-) long Samples for each type of accessory.

E. Delegated-Design Submittal: For metal wall panel assembly indicated to comply with performance requirements and design criteria, including analysis data signed and sealed by the qualified professional engineer responsible for their preparation.

F. Coordination Drawings: Exterior elevations drawn to scale and coordinating penetrations and wall-mounted items. Show the following:

1. Wall panels and attachments.
2. Girts.
3. Wall-mounted items including doors, windows, louvers, and lighting fixtures.
4. Penetrations of wall by pipes and utilities.

G. Qualification Data: For Installer.

H. Product Test Reports: Based on evaluation of comprehensive tests performed by a qualified testing agency, for each product.

I. Field quality-control reports.

J. Maintenance Data: For metal wall panels to include in maintenance manuals.

K. Warranties: Sample of special warranties.

1.6 QUALITY ASSURANCE

A. Installer Qualifications: An employer of workers trained and approved by manufacturer.

B. Testing Agency Qualifications: Qualified according to ASTM E 329 for testing indicated.

C. Source Limitations: Obtain each type of metal wall panel from single source from single manufacturer.

D. Fire-Resistance Ratings: Where indicated, provide metal wall panels identical to those of assemblies tested for fire resistance per ASTM E 119 by a qualified testing agency. Identify products with appropriate markings of applicable testing agency.

1. Indicate design designations from UL's "Fire Resistance Directory" or from the listings of another qualified testing agency.

E. Preinstallation Conference: Conduct conference at project site.

1. Meet with Owner, Architect, Owner's insurer if applicable, testing and inspecting agency representative, metal wall panel Installer, metal wall panel manufacturer's representative, structural-support Installer, and installers whose work interfaces with or affects metal wall panels, including installers of doors, windows, and louvers.
2. Review and finalize construction schedule and verify availability of materials, Installer's personnel, equipment, and facilities needed to make progress and avoid delays.
3. Review methods and procedures related to metal wall panel installation, including manufacturer's written instructions.
4. Examine support conditions for compliance with requirements, including alignment between and attachment to structural members.
5. Review flashings, special siding details, wall penetrations, openings, and condition of other construction that will affect metal wall panels.
6. Review governing regulations and requirements for insurance, certificates, and tests and inspections if applicable.

7. Review temporary protection requirements for metal wall panel assembly during and after installation.
8. Review wall panel observation and repair procedures after metal wall panel installation.

1.7 DELIVERY, STORAGE, AND HANDLING

A. Deliver components, sheets, metal wall panels, and other manufactured items so as not to be damaged or deformed. Package metal wall panels for protection during transportation and handling.

B. Unload, store, and erect metal wall panels in a manner to prevent bending, warping, twisting, and surface damage.

C. Stack metal wall panels horizontally on platforms or pallets, covered with suitable weathertight and ventilated covering. Store metal wall panels to ensure dryness, with positive slope for drainage of water. Do not store metal wall panels in contact with other materials that might cause staining, denting, or other surface damage.

D. Retain strippable protective covering on metal wall panel for period of metal wall panel installation.

E. Protect foam-plastic insulation as follows:

1. Do not expose to sunlight, except to extent necessary for period of installation and concealment.
2. Protect against ignition at all times. Do not deliver foam-plastic insulation materials to Project site before installation time.
3. Complete installation and concealment of plastic materials as rapidly as possible in each area of construction.

1.8 PROJECT CONDITIONS

A. Weather Limitations: Proceed with installation only when existing and forecasted weather conditions permit assembly of metal wall panels to be performed according to manufacturers' written instructions and warranty requirements.

B. Field Measurements: Verify locations of structural members and wall opening dimensions by field measurements before metal wall panel fabrication, and indicate measurements on Shop Drawings.

1.9 COORDINATION

A. Coordinate metal wall panel assemblies with rain drainage work, flashing, trim, and construction of girts, soffits, and other adjoining work to provide a leakproof, secure, and noncorrosive installation.

1.10 WARRANTY

A. Special Warranty: Manufacturer's standard form in which manufacturer agrees to repair or replace components of metal wall panel assemblies that fail in materials or workmanship within specified warranty period.

1. Failures include, but are not limited to, the following:

a. Structural failures including rupturing, cracking, or puncturing.
b. Deterioration of metals and other materials beyond normal weathering.

2. Warranty Period: **Two** years from date of Substantial Completion.

B. Special Warranty on Panel Finishes: Manufacturer's standard form in which manufacturer agrees to repair finish or replace metal wall panels that show evidence of deterioration of factory-applied finishes within specified warranty period.

1. Exposed Panel Finish: Deterioration includes, but is not limited to, the following:

a. Color fading more than 5 Hunter units when tested according to ASTM D 2244.
b. Chalking in excess of a No. 8 rating when tested according to ASTM D 4214.
c. Cracking, checking, peeling, or failure of paint to adhere to bare metal.

2. Finish Warranty Period: **20** years from date of Substantial Completion.

PART 2 - PRODUCTS

2.1 PANEL MATERIALS

A. Metallic-Coated Steel Sheet: Restricted flatness steel sheet metallic coated by the hot-dip process and prepainted by the coil-coating process to comply with ASTM A 755/A 755M.

1. Zinc-Coated (Galvanized) Steel Sheet: ASTM A 653/A 653M, G90 (Z275) coating designation; structural quality.
2. Surface: Smooth, flat finish.

3. Exposed Coil-Coated Finish:

   a. 2-Coat Fluoropolymer: AAMA 621. Fluoropolymer finish containing not less than 70 percent PVDF resin by weight in color coat. Prepare, pretreat, and apply coating to exposed metal surfaces to comply with coating and resin manufacturers' written instructions.

4. Concealed Finish: Apply pretreatment and manufacturer's standard white or light-colored acrylic or polyester backer finish consisting of prime coat and wash coat with a minimum total dry film thickness of 0.5 mil (0.013 mm).

B. Panel Sealants:

1. Sealant Tape: Pressure-sensitive, 100 percent solids, gray polyisobutylene compound sealant tape with release-paper backing. Provide permanently elastic, nonsag, nontoxic, nonstaining tape 1/2 inch (13 mm) wide and 1/8 inch (3 mm) thick.
2. Joint Sealant: ASTM C 920; elastomeric polyurethane, polysulfide, or silicone sealant; of type, grade, class, and use classifications required to seal joints in metal wall panels and remain weathertight; and as recommended in writing by metal wall panel manufacturer.
3. Butyl-Rubber-Based, Solvent-Release Sealant: ASTM C 1311.

2.2 MISCELLANEOUS METAL FRAMING

A. Miscellaneous Metal Framing, General: ASTM C 645, cold-formed metallic-coated steel sheet, ASTM A 653/A 653M, G40 (Z120) hot-dip galvanized or coating with equivalent corrosion resistance unless otherwise indicated.

B. Zee Clips: 0.079-inch (2.01-mm) nominal thickness.

C. Base or Sill Angles: 0.079-inch (2.01-mm) nominal thickness.

D. Hat-Shaped, Rigid Furring Channels:

1. Nominal Thickness: 0.040 inch (1.02 mm).
2. Depth: 7/8-inch (22 mm).

E. Fasteners for Miscellaneous Metal Framing: Of type, material, size, corrosion resistance, holding power, and other properties required to fasten miscellaneous metal framing members to substrates.

2.3 MISCELLANEOUS MATERIALS

A. Panel Fasteners: Self-tapping screws, bolts, nuts, self-locking rivets and bolts, end-welded studs, and other suitable fasteners designed to withstand design loads.

Provide exposed fasteners with heads matching color of metal wall panels by means of plastic caps or factory-applied coating. Provide EPDM, PVC, or neoprene sealing washers.

2.4 CONCEALED-FASTENER, LAP-SEAM METAL WALL PANELS

A. General: Provide factory-formed metal wall panels designed to be field assembled by lapping and interconnecting side edges of adjacent panels and mechanically attaching through panel to supports using concealed fasteners in side laps. Include accessories required for weathertight installation.

B. Flush-Profile, Concealed-Fastener Metal Wall Panels: Formed with vertical panel edges and flat pan between panel edges; with flush joint between panels.

1. Manufacturers: Subject to compliance with requirements, available manufacturers offering products that may be incorporated into the Work include, but are not limited to, the following:
2. Basis-of-Design Product: Subject to compliance with requirements, provide product indicated on Drawings or comparable product by one of the following:

a. AEP-Span.
b. Alcoa Architectural Products (USA).
c. Architectural Building Components.
d. Architectural Metal Systems.
e. ATAS International, Inc.
f. Berridge Manufacturing Company.
g. CENTRIA Architectural Systems.
h. Dimension Metals, Inc.
i. Fabral.
j. Flexospan Steel Buildings, Inc.
k. Industrial Building Panels.
l. MBCI; Div. of NCI Building Systems.
m. Metal-Fab Manufacturing, L.L.C.
n. Metecno-Morin.

3. Material: Zinc-coated (galvanized) steel sheet, 0.028-inch (0.71-mm) nominal thickness.

a. Exterior Finish: 2-coat fluoropolymer.
b. Color: As selected by Architect from manufacturer's full range.

4. Panel Coverage: 12 inches (305 mm).
5. Panel Height: 1.5 inches (38 mm).

2.5 ACCESSORIES

A. Wall Panel Accessories: Provide components required for a complete metal wall panel assembly including trim, copings, fasciae, mullions, sills, corner units, clips, flashings, sealants, gaskets, fillers, closure strips, and similar items. Match material and finish of metal wall panels, unless otherwise indicated.

1. Closures: Provide closures at eaves and rakes, fabricated of same metal as metal wall panels.
2. Backing Plates: Provide metal backing plates at panel end splices, fabricated from material recommended by manufacturer.
3. Closure Strips: Closed-cell, expanded, cellular, rubber or crosslinked, polyolefin-foam or closed-cell laminated polyethylene; minimum 1-inch- (25-mm-) thick, flexible closure strips; cut or premolded to match metal wall panel profile. Provide closure strips where indicated or necessary to ensure weathertight construction.

B. Flashing and Trim: Formed from 0.018-inch (0.46-mm) minimum thickness, zinc-coated (galvanized) steel sheet or aluminum-zinc alloy-coated steel sheet prepainted with coil coating. Provide flashing and trim as required to seal against weather and to provide finished appearance. Locations include, but are not limited to, bases, drips, sills, jambs, corners, endwalls, framed openings, rakes, fasciae, parapet caps, soffits, reveals, and fillers. Finish flashing and trim with same finish system as adjacent metal wall panels.

2.6 FABRICATION

A. General: Fabricate and finish metal wall panels and accessories at the factory to greatest extent possible, by manufacturer's standard procedures and processes, as necessary to fulfill indicated performance requirements demonstrated by laboratory testing. Comply with indicated profiles and with dimensional and structural requirements.

B. Fabricate metal wall panels in a manner that eliminates condensation on interior side of panel and with joints between panels designed to form weathertight seals.

C. Provide panel profile, including major ribs and intermediate stiffening ribs, if any, for full length of panel.

D. Sheet Metal Accessories: Fabricate flashing and trim to comply with recommendations in SMACNA's "Architectural Sheet Metal Manual" that apply to the design, dimensions, metal, and other characteristics of item indicated.

1. Form exposed sheet metal accessories that are without excessive oil canning, buckling, and tool marks and that are true to line and levels indicated, with exposed edges folded back to form hems.

2. Seams for Aluminum: Fabricate nonmoving seams with flat-lock seams. Form seams and seal with epoxy seam sealer. Rivet joints for additional strength.
3. Seams for Other Than Aluminum: Fabricate nonmoving seams in accessories with flat-lock seams. Tin edges to be seamed, form seams, and solder.
4. Sealed Joints: Form nonexpansion but movable joints in metal to accommodate elastomeric sealant to comply with SMACNA standards.
5. Conceal fasteners and expansion provisions where possible. Exposed fasteners are not allowed on faces of accessories exposed to view.
6. Fabricate cleats and attachment devices from same material as accessory being anchored or from compatible, noncorrosive metal recommended by metal wall panel manufacturer.

    a. Size: As recommended by SMACNA's "Architectural Sheet Metal Manual" or metal wall panel manufacturer for application but not less than thickness of metal being secured.

2.7 GENERAL FINISH REQUIREMENTS

A. Comply with NAAMM's "Metal Finishes Manual for Architectural and Metal Products" for recommendations for applying and designating finishes.

B. Protect mechanical and painted finishes on exposed surfaces from damage by applying a strippable, temporary protective covering before shipping.

C. Appearance of Finished Work: Variations in appearance of abutting or adjacent pieces are acceptable if they are within one-half of the range of approved Samples. Noticeable variations in the same piece are not acceptable. Variations in appearance of other components are acceptable if they are within the range of approved Samples and are assembled or installed to minimize contrast.

PART 3 - EXECUTION

3.1 EXAMINATION

A. Examine substrates, areas, and conditions, with Installer present, for compliance with requirements for installation tolerances, metal wall panel supports, and other conditions affecting performance of work.

1. Examine wall framing to verify that girts, angles, channels, studs, and other structural panel support members and anchorage have been installed within alignment tolerances required by metal wall panel manufacturer.

B. Examine roughing-in for components and systems penetrating metal wall panels to verify actual locations of penetrations relative to seam locations of metal wall panels before metal wall panel installation.

C. Proceed with installation only after unsatisfactory conditions have been corrected.

3.2 PREPARATION

A. Miscellaneous Framing: Install subgirts, base angles, sills, furring, and other miscellaneous wall panel support members and anchorages according to ASTM C 754 and metal wall panel manufacturer's written recommendations.

3.3 METAL WALL PANEL INSTALLATION

A. General: Install metal wall panels according to manufacturer's written instructions in orientation, sizes, and locations indicated on Drawings. Install panels perpendicular to girts and subgirts unless otherwise indicated. Anchor metal wall panels and other components of the Work securely in place, with provisions for thermal and structural movement.

1. Shim or otherwise plumb substrates receiving metal wall panels.
2. Flash and seal metal wall panels at perimeter of all openings. Fasten with self-tapping screws. Do not begin installation until weather barrier and flashings that will be concealed by metal wall panels are installed.
3. Install screw fasteners in predrilled holes.
4. Locate and space fastenings in uniform vertical and horizontal alignment.
5. Install flashing and trim as metal wall panel work proceeds.
6. Locate panel splices over, but not attached to, structural supports. Stagger panel splices and end laps to avoid a four-panel lap splice condition.
7. Apply elastomeric sealant continuously between metal base channel (sill angle) and concrete and elsewhere as indicated or, if not indicated, as necessary for waterproofing.
8. Align bottom of metal wall panels and fasten with blind rivets, bolts, or self-tapping screws. Fasten flashings and trim around openings and similar elements with self-tapping screws.
9. Provide weathertight escutcheons for pipe and conduit penetrating exterior walls.

B. Fasteners:

1. Steel Wall Panels: Use stainless-steel fasteners for surfaces exposed to the exterior; use galvanized steel fasteners for surfaces exposed to the interior.
2. Aluminum Wall Panels: Use aluminum or stainless-steel fasteners for surfaces exposed to the exterior; use aluminum or galvanized steel fasteners for surfaces exposed to the interior.

3. Copper Wall Panels: Use copper, stainless-steel or hardware-bronze fasteners.
4. Stainless-Steel Wall Panels: Use stainless-steel fasteners.

C. Metal Protection: Where dissimilar metals will contact each other or corrosive substrates, protect against galvanic action as recommended by metal wall panel manufacturer.

D. Joint Sealers: Install gaskets, joint fillers, and sealants where indicated and where required for weathertight performance of metal wall panel assemblies. Provide types of gaskets, fillers, and sealants indicated or, if not indicated, types recommended by metal wall panel manufacturer.

1. Seal metal wall panel end laps with double beads of tape or sealant, full width of panel. Seal side joints where recommended by metal wall panel manufacturer.
2. Prepare joints and apply sealants to comply with requirements in Division 07 Section "Joint Sealants."

E. Zee Clips: Provide Zee clips of size indicated or, if not indicated, as required to act as standoff from subgirts for thickness of insulation indicated. Attach to subgirts with fasteners.

3.4 ACCESSORY INSTALLATION

A. General: Install accessories with positive anchorage to building and weathertight mounting, and provide for thermal expansion. Coordinate installation with flashings and other components.

1. Install components required for a complete metal wall panel assembly including trim, copings, corners, seam covers, flashings, sealants, gaskets, fillers, closure strips, and similar items.

B. Flashing and Trim: Comply with performance requirements, manufacturer's written installation instructions, and SMACNA's "Architectural Sheet Metal Manual." Provide concealed fasteners where possible, and set units true to line and level as indicated. Install work with laps, joints, and seams that will be permanently watertight and weather resistant.

1. Install exposed flashing and trim that is without excessive oil canning, buckling, and tool marks and that is true to line and levels indicated, with exposed edges folded back to form hems. Install sheet metal flashing and trim to fit substrates and to result in waterproof and weather-resistant performance.
2. Expansion Provisions: Provide for thermal expansion of exposed flashing and trim. Space movement joints at a maximum of 10 feet (3 m) with no joints allowed within 24 inches (605 mm) of corner or intersection. Where lapped expansion provisions cannot be used or would not be sufficiently weather

resistant and waterproof, form expansion joints of intermeshing hooked flanges, not less than 1 inch (25 mm) deep, filled with mastic sealant (concealed within joints).

3.5 FIELD QUALITY CONTROL

A. Manufacturer's Field Service: Engage a factory-authorized service representative to inspect and test completed metal wall panel installation, including accessories.

B. Remove and replace metal wall panels where tests and inspections indicate that they do not comply with specified requirements.

C. Additional tests and inspections, at Contractor's expense, will be performed to determine compliance of replaced or additional work with specified requirements.

3.6 CLEANING AND PROTECTION

A. Remove temporary protective coverings and strippable films, if any, as metal wall panels are installed, unless otherwise indicated in manufacturer's written installation instructions. On completion of metal wall panel installation, clean finished surfaces as recommended by metal wall panel manufacturer. Maintain in a clean condition during construction.

B. After metal wall panel installation, clear weep holes and drainage channels of obstructions, dirt, and sealant.

C. Replace metal wall panels that have been damaged or have deteriorated beyond successful repair by finish touchup or similar minor repair procedures.

END OF SECTION 074213

THIS PAGE LEFT INTENTIONALLY BLANK

SECTION 075216 - STYRENE-BUTADIENE-STYRENE (SBS) MODIFIED BITUMINOUS MEMBRANE ROOFING

PART 1 - GENERAL

1.1 RELATED DOCUMENTS

A. Drawings and general provisions of the Contract, including General and Supplementary Conditions and Division 01 Specification Sections, apply to this Section.

1.2 SUMMARY

A. Section Includes:

1. Styrene-butadiene-styrene (SBS) modified bituminous membrane roofing
2. Roof insulations
3. Roof membrane surfacing material
4. Walkways

B. Related Sections:
1. Division 02 Section “Selective Demolition” for tear-off of existing roofing systems.
2. Division 07 Section “Standing Seam Metal Roofing” for limited areas of metal roofing not covered under this Section.
3. Division 07 Section “Flashing and Sheet Metal” for metal roof penetration flashings and counterflashings.
4. Division 07 Section “Roof Accessories” for roof hatches.
5. Division 07 Section "Joint Sealants" for joint sealants, joint fillers, and joint preparation.

1.3 DEFINITIONS

A. Roofing Terminology: See ASTM D 1079 and glossary of NRCA's "The NRCA Roofing and Waterproofing Manual" for definition of terms related to roofing work in this Section.

B. Hot Roofing Asphalt: Roofing asphalt heated to its equiviscous temperature, the temperature at which its viscosity is 125 centipoise for mop-applied roofing asphalt and 75 centipoise for mechanical spreader-applied roofing asphalt, within a range of plus or minus 25 deg F (14 deg C), measured at the mop cart or mechanical spreader immediately before application.

1.4 PERFORMANCE REQUIREMENTS

A. General Performance: Installed membrane roofing and base flashings shall withstand specified uplift pressures, thermally induced movement, and exposure to weather without failure due to defective manufacture, fabrication, installation, or other defects in construction. Membrane roofing and base flashings shall remain watertight.

B. Material Compatibility: Provide roofing materials that are compatible with one another under conditions of service and application required, as demonstrated by membrane roofing manufacturer based on testing and field experience.

C. Roofing System Design: Provide membrane roofing system that is identical to systems that have been successfully tested by a qualified testing and inspecting agency to resist uplift pressure calculated according to ASCE/SEI 7.

1. Corner Uplift Pressure: 112.5 lbf/sq. ft.
2. Perimeter Uplift Pressure: 75.0 lbf/sq. ft.
3. Field-of-Roof Uplift Pressure: 45.0 lbf/sq. ft.

D. FM Approvals Listing: Provide membrane roofing, base flashings, and component materials that comply with requirements in FM Approvals 4450 and FM Approvals 4470 as part of a membrane roofing system, and that are listed in FM Approvals' for Class 1 or noncombustible construction, as applicable. Identify materials with FM Approvals markings.

1. Hail Resistance Rating: SH.

1.5 SUBMITTALS

A. Product Data: For each type of product indicated.

B. Shop Drawings: For roofing system. Include plans, elevations, sections, details, and attachments to other work.

1. Base flashings and membrane terminations.
2. Crickets, saddles, and tapered edge strips, including slopes.
3. Insulation fastening patterns for corner, perimeter, and field-of-roof locations.

C. Samples for Verification: For the following products:

1. Sheet roofing materials, including base-ply sheet, membrane cap sheet and flashing sheet, of color specified.
2. Roof insulations, of each type.
3. Walkway pads or rolls.
4. Six insulation fasteners of each type, length, and finish.

D. Qualification Data: For qualified Installer and manufacturer.

E. Manufacturer Certificates: Signed by roofing manufacturer certifying that roofing system complies with requirements specified in "Performance Requirements" Article.

1. Submit evidence of complying with performance requirements.

F. Product Test Reports: Based on evaluation of comprehensive tests performed by manufacturer and witnessed by a qualified testing agency, for components of membrane roofing system.

G. Maintenance Data: For roofing system to include in maintenance manuals.

H. Warranties: Sample of special warranties.

1.6 QUALITY ASSURANCE

A. Manufacturer Qualifications: A qualified manufacturer that is UL listed, FM Approvals approved for membrane roofing system identical to that used for this Project.

B. Installer Qualifications: A qualified firm that is approved, authorized, or licensed by membrane roofing system manufacturer to install manufacturer's product and that is eligible to receive manufacturer's special warranty.

C. The Contractor shall maintain a full-time superintendent who is on the job site full-time during times that hot-applied roofing work is in progress and who has the experience indicated.

D. Source Limitations: Obtain components including roof insulation and fasteners, for membrane roofing system from same manufacturer as membrane roofing or approved by membrane roofing manufacturer.

E. Exterior Fire-Test Exposure: ASTM E 108, Class A for application and roof slopes indicated, as determined by testing identical membrane roofing materials by a qualified testing agency. Materials shall be identified with appropriate markings of applicable testing agency.

F. Fire-Resistance Ratings: Where indicated, provide fire-resistance-rated roof assemblies identical to those of assemblies tested for fire resistance per ASTM E 119 by a qualified testing agency. Identify products with appropriate markings of applicable testing agency.

G. Preconstruction Conference: As indicated in Section 012000, “Project Meetings”, after the contract award, the representative of the Roofing Manufacturer, the

Roof Contractor and their Superintendent, the Architect and the Owner shall meet at the job site for a pre-construction conference to discuss, at a minimum, the following:

1. Review requirements of the Contract Documents, status of and coordination with work to be done by the Owner.
2. Discuss roofing system protection requirements for construction period extending beyond roofing installation, and Contractor's responsibilities in obtaining substantial completion.
3. Review foreseeable methods and procedures related to roofing work, including but not necessarily limited to the following:
   a. Tour representative areas of roofing substrate (decks), inspect and discuss condition of existing substrates, curbs penetrations and other rooftop conditions.
   b. Review structural loading limitation of roof deck with a view toward construction roof loading and discuss procedures for identification and replacement of defective roof deck.
   c. Review and verify submitted construction schedule and discuss availability of materials, Contractor's personnel, equipment and facilities needed to keep the job on schedule. Discuss procedures should the job fall behind schedule.
   d. Review required inspection, testing, certifying and material usage accounting procedures.
   e. Review responsibilities and authority of the Owner's representative on the job.
   f. Review weather and forecasted weather conditions and procedures for coping with unfavorable conditions, including the possibility of temporary roofing.

1.7 DELIVERY, STORAGE, AND HANDLING

A. Deliver roofing materials to Project site in original containers with seals unbroken and labeled with manufacturer's name, product brand name and type, date of manufacture, approval or listing agency markings, and directions for storing and mixing with other components.

B. Store roofing materials in a dry, well-ventilated, weathertight location to ensure no significant moisture pickup and maintain at a temperature exceeding roofing system manufacturer's written instructions. Store rolls of felt and other sheet materials on end on pallets or other raised surfaces. Do not double-stack rolls.

C. Store liquid materials in their original undamaged containers in a clean, dry, protected location and within the temperature range required by roofing system manufacturer. Protect stored liquid material from direct sunlight.

   1. Discard and legally dispose of liquid material that cannot be applied within its stated shelf life.

D. Protect roof insulation materials from physical damage and from deterioration by sunlight, moisture, soiling, and other sources. Store in a dry location. Comply with insulation manufacturer's written instructions for handling, storing, and protecting during installation.

E. Handle and store roofing materials and place equipment in a manner to avoid permanent deflection of deck.

F. Do not leave unused felts and other sheet materials on the roof overnight or when roofing work is not in progress unless protected from weather and moisture and unless maintained at a temperature exceeding 50 deg F.

1.8 PROJECT CONDITIONS

A. Weather Limitations: Proceed with installation only when existing and forecasted weather conditions permit roofing system to be installed according to manufacturer's written instructions and warranty requirements.

B. Existing Roof Membrane and Surfaces to be Removed/Replaced: Existing roofing to be removed generally consists of fully-adhered, unballasted EPDM membrane roofing over rigid insulation. The existing deck substrate conditions vary:

1. Areas ‘B,’ ‘C’ and ‘F’ consist of roofing as described above. Substrate deck consists of a structural gypsum board covered with a hardened, tapered gypsum topping. The topping in these areas is sloped at approximately 1/8-inch per 12 inches, and shall remain in place.

2. Areas ‘E’ and ‘G,’ including the narrow passageway areas connecting these wings to the remainder of the building, consist of roofing as described above. Substrate deck consists of a structural, corrugated metal deck over steel joists. The existing roof slope above Areas ’E’ and ‘G’ are approximately 1/4-inch per 12 inches. Note that existing substrate metal deck above predominant portion of Area ‘G’ (Gymnasium) is an acoustical deck. There are specific cells or ribs in this deck to be used for fastening new insulation, and specific surfaces which should NOT be penetrated with new fasteners. These conditions may be observed from below within the Gymnasium.

3. At the southwest corner of Area ‘B,’ a small area of walkable-pitch standing seam metal roofing occurs that is positioned over a covered entrance below. This deck is applied over corrugated metal roof decking with minimal substrate board. This roofing shall be removed along with any substrate board down to the metal decking. This area shall receive a new standing seam metal roof covering over rigid insulation and cover board.

4. Two small areas of existing, low-slope membrane roofing – one on south side of Area ‘B’ and the other on south side of Area ‘G’ - shall have existing EPDM roof

membranes and insulations removed. These areas shall receive new sloped roofing consisting of standing seam metal roofing over marine-grade plywood, applied over cold-formed metal-framed roof structure.

C. Existing Roof Membrane and Surfaces to Remain In Place: Existing roofing at the following locations shall remain in place:

1. Area 'A,' Low-slope upper roof at Areas 'D1' and Area 'D2:' These roof areas consist of a recently-installed SBS Modified Bituminous roofing system over mechanically-fastened rigid insulation. These roofs were placed under previous phases. Roof membrane includes Johns Manville Dynabase, DynaGlas and DynaFlex products. These areas are under warranty and are not to be disturbed.

2. Area 'D1' Pitched roofing: These roof areas consists of a walkable-pitch white PVC single-ply membrane. These areas are under warranty and are not to be disturbed.

3. Area 'D1,' Low-Slope roofing at small area in front of school: This area consists of a recently-installed SBS Modified Bituminous roofing system over mechanically-fastened rigid insulation. This roof were placed under previous phases. Roof membrane includes Johns Manville Dynabase, DynaGlas and DynaFlex products. This small area is not draining properly, and work in this area shall be limited to installing two new roof drains.

4. Area 'D2' Pitched Roofing: A small trapezoidal segment of roofing at front of the School is covered in standing seam metal roofing. This area is not to be disturbed.

1.9 WARRANTY

A. Special Warranty: Manufacturer's standard or customized form, without monetary limitation, in which manufacturer agrees to repair or replace components of membrane roofing system that fail in materials or workmanship within specified warranty period.

1. Special warranty includes membrane roofing, base flashings, roof insulation, fasteners, roofing accessories, and other components of membrane roofing system.
2. Warranty Period: **20 years** from date of Substantial Completion with "No-Dollar-Limit".

B. Special Project Warranty: Submit roofing Installer's warranty, on warranty form at end of this Section, signed by Installer, covering the Work of this Section, including all components of membrane roofing system such as membrane roofing, base

flashing, roof insulation, fasteners, cover boards, substrate boards, vapor retarders, and walkway products, for the following warranty period:

1. Warranty Period: Two years from date of Substantial Completion.

PART 2 - PRODUCTS

2.1 SBS-MODIFIED ASPHALT-SHEET MATERIALS

A. SBS-Modified Bituminous Membrane Roofing:

1. Manufacturers: Subject to compliance with requirements, provide roofing membrane products by one of the following:
   a. Johns Manville
   b. Siplast
   c. Soprema
   d. Tremco

2. Polyisocyanurate Board Insulation:
   a. Hunter Panels
   b. Johns Manville R-Panel
   c. Dow Chemical Thermax
   d. Atlas AC-Foam series

3. High-Density Mineral Wool Board Insulation:
   a. Roxul MonoBoard Plus
   b. RockWool Delta-4 mineral board

4. Cover Board:
   a. Georgia Pacific DensDeck DuraGuard
   b. USG Securock (gypsum fiber)
   c. Roxul TopRock DD Plus

2.2 SBS-MODIFIED BITUMINOUS SHEET

A. SBS-Modified Bituminous Sheet, Smooth (Base) Surfaced: SBS-modified asphalt sheet, smooth surfaced, dusted with fine parting agent on both sides; suitable for application method specified; manufacturer's standard thickness and with; use reinforcing type and thickness is as follows:
   1. Use: Base ply of 2-ply, modified bituminous membrane roofing.
   2. Reinforcing: Glass-fiber mesh or nonwoven glass-fiber mat.
   3. Minimum Thickness: 3.5 mm.
   5. Tested per ASTM D 5147: ASTM D 6163, Type 1, Grade S.

B. SBS-Modified Bituminous Sheet, Mineral Granule (Cap) Surfaced: SBS-modified asphalt sheet, with continuous layer of mineral granules factory applied to top exposed surface; suitable for application methods specified; manufacturer's standard thickness and weight; use reinforcing type, granule color and thickness as follows:
   1. Use: Finish ply of 2-ply, modified bituminous membrane roofing.
   2. Reinforcing: Glass-fiber mesh or nonwoven glass-fiber mat.
   3. Granule Color: White.
   4. Minimum Thickness: 3.5 mm.
   6. Tested per ASTM D 5147: ASTM D 6163, Type 1, Grade G.

2.2 BASE FLASHING SHEET MATERIALS

A. SBS-Modified Bituminous Sheet, Mineral-Granule Surfaced: SBS-modified asphalt sheet, with continuous layer of ceramic granules factory applied to top exposed surface; suitable for application method specified; manufacturer's standard thickness and weight; use, reinforcing type, granule color and thickness is as follows:

   1. Use: Base flashing.
   2. Reinforcing: Composite woven or nonwoven polyester and glass-fiber mat.
   3. Granule Color: White or light gray.
   4. Minimum Thickness: 4.0 mm.
   6. Tested per ASTM D 5147: ASTM D 6221, Type 1.

2.3 AUXILIARY ROOFING MEMBRANE MATERIALS

A. Asphalt Primer: ASTM D 41.

B. Roofing Asphalt: ASTM D 312, Type IV.

   1. Label each container or provide certification with each load of bulk asphalt identifying type of roofing asphalt and indicating softening point, minimum flash point, equiviscous temperature, and finished blowing temperature.

C. Asphalt Roofing Cement: ASTM D 4586, asbestos free, of consistency required by roofing system manufacturer for application.

D. Mastic Sealant: Polyisobutylene, plain or modified bitumen; non-hardening, non-migrating, non-skinning, and nondrying.

E. Fasteners: Factory-coated steel fasteners and metal or plastic plates complying with corrosion-resistance provisions in FM Approvals 4470, designed for fastening roofing membrane components to substrate; tested by manufacturer for required pullout strength, and acceptable to roofing system manufacturer.

F. Metal Flashing Sheet: As specified in Division 07 Section "Sheet Metal Flashing and Trim."

G. Roofing Granules: Ceramic-coated roofing granules, No. 11 screen size with 100 percent passing No. 8 (2.36-mm) sieve and 98 percent of mass retained on No. 40 (0.425-mm) sieve, color to match roofing membrane.

H. Miscellaneous Accessories: Provide those recommended by roofing system manufacturer.

2.4 ROOF INSULATION

A. General: Pre-formed roof insulation boards manufactured or approved by roofing manufacturer, selected from manufacturer's standard sizes suitable for application, of thicknesses indicated and that produce FM Approvals-approved roof insulation. Roof insulations on this project shall consist of multiple types, as follows:

B. Polyisocyanurate Board Insulation: ASTM C 1289, Type II, Class 1, Grade 2 felt or glass-fiber mat facer on both major surfaces, 20 PSI minimum, 25 PSI maximum compressive strength. Provide in minimum thickness as needed to **achieve minimum aged R-value of 21.0.** Taper this stratum as needed at roof areas indicated to achieve a minimum roof slope of not less than 1/4-inch per 12 inches.

C. High-Density Mineral Wool Board Insulation: ASTM C 726 and FM 4470; rigid, single density, dimensionally stable, mineral wool insulation board, uncoated/unfaced, or coated with a top layer of bitumen, compatible with bituminous roofing. This product shall have of a minimum density of 12.5 pounds per cubic foot. This layer of insulation shall be provided at all roof areas immediately above the polyisocyanurate layer in a uniform thickness of 1-inch with a minimum aged R-value of not less than 4.0. Grafton-Bethel Elementary School lies in proximity to the NN-Williamsburg Airport air traffic pattern, and **the intent of providing this layer to enhance acoustical performance by reducing sound transmission of the roof/deck assembly.**

D. Cover Board: ASTM C 1278 and FM 4470; non-combustible, rigid underlayment board for low-slope roofing composed of mineral-aggregate fiber-reinforced gypsum, cellulosic fibers, binders and waterproofing agents without facing, or with an integral top surface seal coating that is compatible with asphaltic roofing. Provide in thickness not less than 1/2-inch, and apply over the High-Density Mineral Wool Board stratum.

E. Provide preformed saddles, crickets, tapered edge strips, and other insulation shapes where indicated for sloping to drain. Fabricate to slopes indicated, but in no case, not less than 1/4-inch per 12 inches.

2.5 INSULATION ACCESSORIES

A. General: Furnish roof insulation accessories recommended by insulation manufacturer for intended use and compatibility with membrane roofing.

B. Fasteners: Factory-coated steel fasteners and metal or plastic plates meeting corrosion-resistance provisions in FM Approvals 4470, designed for fastening roof insulation to substrate, and acceptable to roofing system manufacturer.

C. Wood Blocking: Comply with requirements in Division 06 Section "Rough Carpentry".

D. Substrate Joint Tape: 6- or 8-inch- (150- or 200-mm-) wide, coated, glass-fiber joint tape.

2.6 WALKWAYS

A. Walkway Cap Sheet Strips: ASTM D 6163, Grade G, Type I or II, SBS-modified asphalt sheet (reinforced with glass fibers) granular surfaced; suitable for application method specified, and as follows:

1. Granule Color: White.

PART 3 - EXECUTION

3.1 EXAMINATION

A. Examine substrates, areas, and conditions, with Installer present, for compliance with the following requirements and other conditions affecting performance of roofing system:

1. Verify that roof openings and penetrations are in place and curbs are set and braced and that roof drain bodies are securely clamped in place.
2. Verify that wood cants, blocking, curbs, and nailers are securely anchored to roof deck at penetrations and terminations and that nailers match thicknesses of insulation.
3. Verify that surface plane flatness.
4. Verify that the gypsum substrate is visibly dry and free of moisture. Test for capillary moisture by plastic sheet method according to ASTM D 4263.

   a. Test for moisture by pouring 1 pint (0.5 L) of hot roofing asphalt on deck at start of each day's work and at start of each roof area or plane. Do not proceed with roofing work if test sample foams or can be easily and cleanly stripped after cooling.

5. Verify that poured gypsum-curing compounds that will impair adhesion of roofing components to roof deck have been removed.
6. Verify that deck is securely fastened with no projecting fasteners and with no adjacent units in excess of 1/16 inch (1.6 mm) out of plane relative to adjoining deck.

B. Proceed with installation only after unsatisfactory conditions have been corrected.

3.2 PREPARATION

A. Clean substrate of dust, debris, moisture, and other substances detrimental to roofing installation according to roofing system manufacturer's written instructions. Remove sharp projections.

B. Prevent materials from entering and clogging roof drains and conductors and from spilling or migrating onto surfaces of other construction. Remove roof-drain plugs when no work is taking place or when rain is forecast.

C. Prime surface of poured gypsum deck with asphalt primer at a rate of 3/4 gal./100 sq. ft. (0.3 L/sq. m) and allow primer to dry.

3.3 INSULATION INSTALLATION

A. Comply with roofing system manufacturer's written instructions for installing roof insulation.

B. Coordinate installing roofing system components so insulation is not exposed to precipitation or left exposed at the end of the workday.

C. Wood Cant Strips: Install and secure 45-degree wood cant strips at junctures of roofing membrane system with vertical surfaces or angle changes more than 45 degrees.

D. Install tapered insulation under area of roofing to conform to slopes indicated.

E. Install insulation with long joints of insulation in a continuous straight line with end joints staggered between rows, abutting edges and ends between boards. Fill gaps exceeding 1/4 inch (6 mm) with insulation.

1. Cut and fit insulation within 1/4 inch (6 mm) of wood blocking, projections, and penetrations.

F. Install insulation under area of roofing to achieve required thickness. Where overall insulation thickness is 2.7 inches (68 mm) or more, install two or more layers with joints of each succeeding layer staggered from joints of previous layer a minimum of 6 inches (150 mm) in each direction.

G. Trim surface of insulation where necessary at roof drains so completed surface is flush and does not restrict flow of water.

H. Mechanically Fastened and Adhered Insulation: Install first layer of insulation to deck using mechanical fasteners specifically designed and sized for fastening specified board-type roof insulation to deck type.
   1. Fasten first layer of insulation to resist uplift pressure at corners, perimeter, and field of roof.
   2. Set each subsequent layer of insulation in a solid mopping of hot roofing asphalt applied within plus or minus 25 deg F (14 deg C) of equiviscous temperature.

3.4 ROOFING MEMBRANE INSTALLATION, GENERAL

A. Install roofing membrane system according to roofing system manufacturer's written instructions and applicable recommendations in ARMA/NRCA's "Quality Control Guidelines for the Application of Polymer Modified Bitumen Roofing" and as follows:

   1. Deck Type: Varies. Metal B deck.
   2. Adhering Method: M (mopped).
   3. Number of SBS-Modified Asphalt Sheets: Two.
   4. Surfacing Type: M (mineral-granule-surfaced cap sheet).

B. Start installation of roofing membrane in presence of roofing system manufacturer's technical personnel.

C. Coordinate installation of roofing system so insulation and other components of the roofing membrane system not permanently exposed are not subjected to precipitation or left uncovered at the end of the workday or when rain is forecast.

   1. At end of each day's work, provide tie-offs to cover exposed roofing membrane sheets and insulation with a course of coated felt set in roofing cement or hot roofing asphalt, with joints and edges sealed.
   2. Complete terminations and base flashings and provide temporary seals to prevent water from entering completed sections of roofing system.
   3. Remove and discard temporary seals before beginning work on adjoining roofing.

D. Asphalt Heating: Do not raise roofing asphalt temperature above equiviscous temperature range more than one hour before time of application. Do not exceed roofing asphalt manufacturer's recommended temperature limits during roofing asphalt heating. Do not heat roofing asphalt within 25 deg F (14 deg C) of flash point. Discard roofing asphalt maintained at a temperature exceeding finished blowing temperature for more than four hours.

E. Asphalt Heating: Heat and apply SBS-modified roofing asphalt according to roofing system manufacturer's written instructions.

F. Substrate-Joint Penetrations: Prevent roofing asphalt and adhesives from penetrating substrate joints, entering building, or damaging roofing system components or adjacent building construction.

3.5 SBS-MODIFIED BITUMINOUS MEMBRANE INSTALLATION

A. Install modified bituminous roofing membrane sheet and cap sheet according to roofing manufacturer's written instructions, starting at low point of roofing system. Extend roofing membrane sheets over and terminate beyond cants, installing as follows:

1. Adhere to substrate in a solid mopping of hot roofing asphalt applied at not less than 425 deg F (218 deg C).
2. Unroll roofing membrane sheets and allow them to relax for minimum time period required by manufacturer.

B. Laps: Accurately align roofing membrane sheets, without stretching, and maintain uniform side and end laps. Stagger end laps. Completely bond and seal laps, leaving no voids.

1. Repair tears and voids in laps and lapped seams not completely sealed.
2. Apply roofing granules to cover exuded bead at laps while bead is hot.

C. Install roofing membrane sheets so side and end laps shed water.

3.6 FLASHING AND STRIPPING INSTALLATION

A. Install base flashing over cant strips and other sloped and vertical surfaces, at roof edges, and at penetrations through roof; secure to substrates according to roofing system manufacturer's written instructions, and as follows:

1. Prime substrates with asphalt primer if required by roofing system manufacturer.
2. Backer Sheet Application: Mechanically fasten backer sheet to walls or parapets. Adhere backer sheet over roofing membrane at cants in a solid mopping of hot roofing asphalt.
3. Flashing Sheet Application: Adhere flashing sheet to substrate in a solid mopping of hot roofing asphalt applied at not less than 425 deg F (218 deg C). Apply hot roofing asphalt to back of flashing sheet if recommended by roofing system manufacturer.

B. Extend base flashing up walls or parapets a minimum of 8 inches (200 mm) above roofing membrane and 4 inches (100 mm) onto field of roofing membrane.

C. Mechanically fasten top of base flashing securely at terminations and perimeter of roofing.

1. Seal top termination of base flashing with a strip of glass-fiber fabric set in asphalt roofing cement.

D. Install roofing membrane cap-sheet stripping where metal flanges and edgings are set on membrane roofing according to roofing system manufacturer's written instructions.

3.7 WALKWAY INSTALLATION

A. Walkway Cap Sheet Strips: Install walkway cap sheet strips over roofing membrane using same application method as used for roofing membrane cap sheet.

3.8 FIELD QUALITY CONTROL

A. Final Roof Inspection: Arrange for roofing system manufacturer's technical personnel to inspect roofing installation on completion.

1. Notify Architect and Owner 48 hours in advance of date and time of inspection.

B. Roofing system will be considered defective if it does not pass inspections.

1. Additional testing and inspecting, at Contractor's expense, will be performed to determine if replaced or additional work complies with specified requirements.

3.9 PROTECTING AND CLEANING

A. Protect roofing system from damage and wear during remainder of construction period. When remaining construction will not affect or endanger roofing, inspect roofing for deterioration and damage, describing its nature and extent in a written report, with copies to Architect and Owner.

B. Correct deficiencies in or remove roofing system that does not comply with requirements, repair substrates, and repair or reinstall roofing system to a condition free of damage and deterioration at time of Substantial Completion and according to warranty requirements.

C. Clean overspray and spillage from adjacent construction using cleaning agents and procedures recommended by manufacturer of affected construction.

3.10 ROOFING INSTALLER'S WARRANTY

A. WHEREAS <**Insert name**> of <**Insert address**>, herein called the "Roofing Installer," has performed roofing and associated work ("work") on the following project:

1. Owner: York County School Division
2. Address: 302 Dare Road, Yorktown, VA 23692
3. Building Name/Type: Grafton-Bethel Elementary School Phase 3
4. Address: 410 Lakeside Drive, Yorktown, VA 23692
5. Area of Work: Roof Replacement
6. Acceptance Date: <**Insert date**>.
7. Warranty Period: <**Insert time**>.
8. Expiration Date: <**Insert date**>.

B. AND WHEREAS Roofing Installer has contracted (either directly with Owner or indirectly as a subcontractor) to warrant said work against leaks and faulty or defective materials and workmanship for designated Warranty Period,

C. NOW THEREFORE Roofing Installer hereby warrants, subject to terms and conditions herein set forth, that during Warranty Period he will, at his own cost and expense, make or cause to be made such repairs to or replacements of said work as are necessary to correct faulty and defective work and as are necessary to maintain said work in a watertight condition.

D. This Warranty is made subject to the following terms and conditions:

1. Specifically excluded from this Warranty are damages to work and other parts of the building, and to building contents, caused by:

   a. lightning;
   b. peak gust wind speed exceeding 110 mph (m/s);
   c. fire;
   d. failure of roofing system substrate, including cracking, settlement, excessive deflection, deterioration, and decomposition;
   e. faulty construction of parapet walls, copings, chimneys, skylights, vents, equipment supports, and other edge conditions and penetrations of the work;
   f. vapor condensation on bottom of roofing; and
   g. activity on roofing by others, including construction contractors, maintenance personnel, other persons, and animals, whether authorized or unauthorized by Owner.

2. When work has been damaged by any of foregoing causes, Warranty shall be null and void until such damage has been repaired by Roofing Installer and until cost and expense thereof have been paid by Owner or by another responsible party so designated.

3. Roofing Installer is responsible for damage to work covered by this Warranty but is not liable for consequential damages to building or building contents resulting from leaks or faults or defects of work.
4. During Warranty Period, if Owner allows alteration of work by anyone other than Roofing Installer, including cutting, patching, and maintenance in connection with penetrations, attachment of other work, and positioning of anything on roof, this Warranty shall become null and void on date of said alterations, but only to the extent said alterations affect work covered by this Warranty. If Owner engages Roofing Installer to perform said alterations, Warranty shall not become null and void unless Roofing Installer, before starting said work, shall have notified Owner in writing, showing reasonable cause for claim, that said alterations would likely damage or deteriorate work, thereby reasonably justifying a limitation or termination of this Warranty.
5. During Warranty Period, if original use of roof is changed and it becomes used for, but was not originally specified for, a promenade, work deck, spray-cooled surface, flooded basin, or other use or service more severe than originally specified, this Warranty shall become null and void on date of said change, but only to the extent said change affects work covered by this Warranty.
6. Owner shall promptly notify Roofing Installer of observed, known, or suspected leaks, defects, or deterioration and shall afford reasonable opportunity for Roofing Installer to inspect work and to examine evidence of such leaks, defects, or deterioration.
7. This Warranty is recognized to be the only warranty of Roofing Installer on said work and shall not operate to restrict or cut off Owner from other remedies and resources lawfully available to Owner in cases of roofing failure. Specifically, this Warranty shall not operate to relieve Roofing Installer of responsibility for performance of original work according to requirements of the Contract Documents, regardless of whether Contract was a contract directly with Owner or a subcontract with Owner's General Contractor.

E. IN WITNESS THEREOF, this instrument has been duly executed this <**Insert day**> day of <**Insert month**>, <**Insert year**>.

1. Authorized Signature: <**Insert signature**>.
2. Name: <**Insert name**>.
3. Title: <**Insert title**>.

END OF SECTION 075216

SECTION 076200 - SHEET METAL FLASHING AND TRIM

PART 1 - GENERAL

1.1 RELATED DOCUMENTS

A. Drawings and general provisions of the Contract, including General and Supplementary Conditions and Division 01 Specification Sections, apply to this Section.

1.2 SUMMARY

A. Section Includes:

1. Formed Products:
   a. Manufactured through-wall flashing with snaplock receiver and counterflashing.
   b. Formed low-slope roof sheet metal fabrications.
   c. Formed roof drainage sheet metal fabrications
   d. Flat metal wall panels and associated “J” and corner trim.
   e. Furring edge/trim.
   f. Edge fascia.
   g. Coping
   h. Expansion Joint cover
   i. Miscellaneous closures and trim.

B. Related Sections:

1. Division 05 Section "Metal Fabrications" for cast metal downspout boots.
2. Division 06 Section "Rough Carpentry" for wood nailers, curbs, and blocking.
3. Division 07 Section “Metal Roof Panels” for installing sheet metal flashing and trim integral with standing seam metal roofing.
4. Division 07 Section “Metal Wall Panels” for installing sheet metal flashing and trim integral with metal wall panel siding.
5. Division 07 Section "SBS Modified Bituminous Membrane Roofing" for installing sheet metal flashing and trim integral with bituminous membrane roofing.
6. Division 07 Section "Roof Accessories" for equipment supports, roof vents, and other manufactured roof accessory units.

1.3 PERFORMANCE REQUIREMENTS

A. General: Sheet metal flashing and trim assemblies as indicated shall withstand wind loads, structural movement, thermally induced movement, and exposure to weather without failure due to defective manufacture, fabrication, installation, or other defects in construction. Completed sheet metal flashing and trim shall not rattle, leak, or loosen, and shall remain watertight.

B. Thermal Movements: Provide sheet metal flashing and trim that allows for thermal movements from ambient and surface temperature changes.

1. Temperature Change (Range): 120 deg F, ambient; 180 deg F, material surfaces.

1.4 SUBMITTALS

A. Product Data: For each type of product indicated. Include construction details, material descriptions, dimensions of individual components and profiles, and finishes for each manufactured product and accessory.

B. Shop Drawings: Show fabrication and installation layouts of sheet metal flashing and trim, including plans, elevations, locations, and keyed details. Distinguish between shop- and field-assembled work. Include the following:

1. Identification of material, thickness, weight, and finish for each item and location in Project.
2. Details for forming sheet metal flashing and trim, including profiles, shapes, seams, and dimensions.
3. Details for joining, supporting, and securing sheet metal flashing and trim, including layout of fasteners, cleats, clips, and other attachments. Include pattern of seams.
4. Details of termination points and assemblies, including fixed points.
5. Details of edge conditions, including eaves and counter flashings as applicable.
6. Details of special conditions.
7. Details of connections to adjoining work.
8. Detail formed flashing and trim at a scale of not less than 3 inches per 12 inches.

C. Samples for Initial Selection: For each type of sheet metal flashing, trim, and accessory indicated with factory-applied color finishes involving color selection.

D. Samples for Verification: For each type of exposed finish required, prepared on Samples of size indicated below:

1. Sheet Metal Flashing: 12 inches long by actual width of unit, including finished seam and in required profile. Include fasteners, cleats, clips, closures, and other attachments.

a. Trim, metal closures, furring/edge trims, edge fascia, compression band trim and miscellaneous fabrications.
b. Flat Metal Panel and associated “J” and corner trims.

E. Qualification Data: For qualified fabricator.

F. Maintenance Data: For sheet metal flashing, trim, and accessories to include in maintenance manuals.

G. Warranty: Sample of special warranty.

1.5 QUALITY ASSURANCE

A. Fabricator Qualifications: Shop that employs skilled workers who custom fabricate sheet metal flashing and trim similar to that required for this Project and whose products have a record of successful in-service performance.

B. Sheet Metal Flashing and Trim Standard: Comply with SMACNA's "Architectural Sheet Metal Manual" unless more stringent requirements are specified or shown on Drawings.

C. Mockups: Build mockups to verify selections made under sample submittals and to demonstrate aesthetic effects and set quality standards for fabrication and installation.

1. Build mockup of typical roof edge fascia and metal eave cladding; flat metal panel and associated “J” and corner trim; compression band trim and pipe cover.
2. Approval of mockups does not constitute approval of deviations from the Contract Documents contained in mockups unless Architect specifically approves such deviations in writing.

1.6 DELIVERY, STORAGE, AND HANDLING

A. Do not store sheet metal flashing and trim materials in contact with other materials that might cause staining, denting, or other surface damage. Store sheet metal flashing and trim materials away from uncured concrete and masonry.

B. Protect strippable protective covering on sheet metal flashing and trim from exposure to sunlight and high humidity, except to the extent necessary for the period of sheet metal flashing and trim installation.

1.7 WARRANTY

A. Special Warranty on Finishes: Manufacturer's standard form in which manufacturer agrees to repair finish or replace sheet metal flashing and trim that shows evidence of deterioration of factory-applied finishes within specified warranty period.

1. Exposed Panel Finish: Deterioration includes, but is not limited to, the following:

a. Color fading more than 5 Hunter units when tested according to ASTM D 2244.
b. Chalking in excess of a No. 8 rating when tested according to ASTM D 4214.
c. Cracking, checking, peeling, or failure of paint to adhere to bare metal.

2. Finish Warranty Period: 20 years from date of Substantial Completion.

PART 2 - PRODUCTS

2.1 SHEET METALS

A. General: Protect mechanical and other finishes on exposed surfaces from damage by applying a strippable, temporary protective film before shipping.

B. Aluminum Sheet: ASTM B 209 , alloy as standard with manufacturer for finish required, with temper as required to suit forming operations and performance required.

1. Surface: Smooth, flat.
2. As-Milled Finish: Standard two-side bright finish.
3. Exposed Coil-Coated Finishes:

a. Three-Coat Fluoropolymer: AAMA 620. Fluoropolymer finish containing not less than 70 percent PVDF resin by weight in both color coat and clear topcoat. Prepare, pretreat, and apply coating to exposed metal surfaces to comply with coating and resin manufacturers' written instructions.
b. Metallic Fluoropolymer: AAMA 620. Three-coat fluoropolymer finish with suspended metallic flakes containing not less than 70 percent PVDF resin by weight in both color coat and clear topcoat. Prepare, pretreat, and apply coating to exposed metal surfaces to comply with coating and resin manufacturers' written instructions.
c. Color: As selected by Architect from manufacturer's full range including metallic.
d. Concealed Finish: Pretreat with manufacturer's standard white or light-colored acrylic or polyester backer finish, consisting of prime coat and wash coat with a minimum total dry film thickness of 0.5 mil.

C. Metallic-Coated Steel Sheet: Restricted flatness steel sheet, metallic coated by the hot-dip process and prepainted by the coil-coating process to comply with ASTM A 755/A 755M.

1. Zinc-Coated (Galvanized) Steel Sheet: ASTM A 653/A 653M, G90 (Z275) coating designation; structural quality.
2. Aluminum-Zinc Alloy-Coated Steel Sheet: ASTM A 792/A 792M, Class AZ50 coating designation, Grade 40 (Class AZM150 coating designation, Grade 275); structural quality.
3. Surface: Smooth, flat.
4. Exposed Coil-Coated Finish:
   a. Three-Coat Fluoropolymer: AAMA 621. Fluoropolymer finish containing not less than 70 percent PVDF resin by weight in both color coat and clear topcoat. Prepare, pretreat, and apply coating to exposed metal surfaces to comply with coating and resin manufacturers' written instructions.
   b. Metallic Fluoropolymer: AAMA 621. Three-coat fluoropolymer finish with suspended metallic flakes containing not less than 70 percent PVDF resin by weight in both color coat and clear topcoat. Prepare, pretreat, and apply coating to exposed metal surfaces to comply with coating and resin manufacturers' written instructions.
5. Color: As selected by Architect from manufacturer's full range.
6. Concealed Finish: Pretreat with manufacturer's standard white or light-colored acrylic or polyester backer finish, consisting of prime coat and wash coat with a minimum total dry film thickness of 0.5 mil (0.013 mm).

D. Schedule of Sheet Metal Thicknesses: See Schedule on the drawings.

2.2 MISCELLANEOUS MATERIALS

A. General: Provide materials and types of fasteners, solder, welding rods, protective coatings, separators, sealants, and other miscellaneous items as required for complete sheet metal flashing and trim installation and recommended by manufacturer of primary sheet metal unless otherwise indicated.

B. Fasteners: Wood screws, annular threaded nails, self-tapping screws, self-locking rivets and bolts, and other suitable fasteners designed to withstand design loads and recommended by manufacturer of primary sheet metal.

1. General: Blind fasteners or self-drilling screws, gasketed, with hex-washer head.
   a. Blind Fasteners: High-strength aluminum or stainless-steel rivets suitable for metal being fastened.
2. Fasteners for Aluminum Sheet: Aluminum or Series 300 stainless steel.

C. Sealant Tape: Pressure-sensitive, 100 percent solids, gray polyisobutylene compound sealant tape with release-paper backing. Provide permanently elastic, nonsag, nontoxic, nonstaining tape 1/2 inch wide and 1/8 inch thick.

D. Elastomeric Sealant: ASTM C 920, elastomeric polyurethane polymer sealant; low modulus; of type, grade, class, and use classifications required to seal joints in sheet metal flashing and trim and remain watertight.

E. Bituminous Coating: Cold-applied asphalt emulsion complying with ASTM D 1187.

F. Asphalt Roofing Cement: ASTM D 4586, asbestos free, of consistency required for application.

2.3 FABRICATION, GENERAL

A. General: Custom fabricate sheet metal flashing and trim to comply with recommendations in SMACNA's "Architectural Sheet Metal Manual" that apply to design, dimensions, geometry, metal thickness, and other characteristics of item indicated. Fabricate items at the shop to greatest extent possible.

1. Fabricate sheet metal flashing and trim in thickness or weight needed to comply with performance requirements, but not less than that specified for each application and metal.
2. Obtain field measurements for accurate fit before shop fabrication.
3. Form sheet metal flashing and trim without excessive oil canning, buckling, and tool marks and true to line and levels indicated, with exposed edges folded back to form hems.
4. Conceal fasteners and expansion provisions where possible. Exposed fasteners are not allowed on faces exposed to view.

B. Fabrication Tolerances: Fabricate sheet metal flashing and trim that is capable of installation to a tolerance of 1/4 inch in 20 feet on slope and location lines as indicated and within 1/8-inch offset of adjoining faces and of alignment of matching profiles.

C. Sealed Joints: Form non-expansion but movable joints in metal to accommodate elastomeric sealant.

D. Expansion Provisions: Where lapped expansion provisions cannot be used, form expansion joints of intermeshing hooked flanges, not less than 1 inch deep, filled with butyl sealant concealed within joints.

E. Fabricate cleats and attachment devices from same material as accessory being anchored or from compatible, noncorrosive metal.

F. Fabricate cleats and attachment devices of sizes as recommended by SMACNA's "Architectural Sheet Metal Manual" for application, but not less than thickness of metal being secured.

G. Seams: Fabricate nonmoving seams with flat-lock seams. Form seams and seal with elastomeric sealant unless otherwise recommended by sealant manufacturer for intended use.
   1. Seams for Aluminum: Fabricate nonmoving seams with flat-lock seams.
   2. All exposed corners and termination flanges are to be fully welded.

H. Do not use graphite pencils to mark metal surfaces.

2.4 LOW-SLOPE ROOF SHEET METAL FABRICATIONS

A. Roof-Edge Fascia: Fabricate in minimum 96-inch- long, but not exceeding 10-foot-long, sections. Furnish with 6-inch- wide, joint cover plates.

   1. Joint Style: Butt, with 12-inch- wide, concealed backup plate.
   2. Fabricate from the following materials:
      a. Fabricate from the following materials: As shown on the Metal Flashing Schedule on the Construction Drawings.

B. Roof Expansion Joint Covers, Saddles and Terminations: Fabricate to tie into expansion joint to remain. Fabricate joint plates of same thickness as covers. Furnish with continuous saddles to support edge and cover. Miter corners, weld watertight.

   1. Roof Expansion Joint Profile: See drawings.
   2. Joint Style: Standing seams per standard SMACNA detail.
   3. Fabricate from the following materials:
      a. As shown on the Metal Flashing Schedule on the Construction Drawings.

C. Counterflashing: Fabricate from the following materials:
      a. Aluminum: As shown on the Metal Flashing Schedule on the Construction Drawings.

D. Flat Metal Panel: Fabricate from the following materials:
   1. Steel: As shown on the Metal Flashing Schedule on the Construction Drawings.

E. “J” and Corner Trim:
   1. Steel: As shown on the Metal Flashing Schedule on the Construction Drawings.

F. Copings: Fabricate in minimum 96-inch- (2400-mm-) long, but not exceeding 12-foot- (3.6-m-) long, sections. Fabricate joint plates of same thickness as copings. Furnish with continuous cleats to support edge of external leg and interior leg. Miter corners, solder or weld watertight. Shop fabricate interior and exterior corners.

1. Coping Profile: as shown
2. Joint Style: Butted with expansion space and 6-inch- (150-mm-) wide, concealed backup plate.
3. Fabricate from the Following Materials:
   a. Aluminum: 0.050 inch (1.27 mm) thick.

1.5 FORMED ROOF DRAINAGE SHEET METAL FABRICATIONS

G. Gutter: Fabricate from the following materials:
   1. Aluminum: As shown on the Metal Flashing Schedule on the Construction Drawings.

H. Gutter Supports:
   1. Aluminum: As shown on the Metal Flashing Schedule on the Construction Drawings.

I. Downspouts and Downspout Straps:
   1. Aluminum: As shown on the Metal Flashing Schedule on the Construction Drawings.

I. Parapet Scuppers: Fabricate scuppers to dimensions required, with closure flange trim to exterior, 4-inch- (100-mm-) wide wall flanges to interior, and base extending 4 inches (100 mm) beyond cant or tapered strip into field of roof. Fabricate from the following materials:
   1. Aluminum: see drawing for thickness.

PART 3 - EXECUTION

3.1 EXAMINATION

A. Examine substrates, areas, and conditions, with Installer present, to verify actual locations, dimensions and other conditions affecting performance of the Work.

   1. Verify compliance with requirements for installation tolerances of substrates.
   2. Verify that substrate is sound, dry, smooth, clean, sloped for drainage, and securely anchored.

B. For the record, prepare written report, endorsed by Installer, listing conditions detrimental to performance of the Work.

C. Proceed with installation only after unsatisfactory conditions have been corrected.

3.2 INSTALLATION, GENERAL

A. General: Anchor sheet metal flashing and trim and other components of the Work securely in place, with provisions for thermal and structural movement. Use fasteners, solder, welding rods, protective coatings, separators, sealants, and other miscellaneous items as required to complete sheet metal flashing and trim system.

1. Install sheet metal flashing and trim true to line and levels indicated. Provide uniform, neat seams with minimum exposure of solder, welds, and sealant.
2. Install sheet metal flashing and trim to fit substrates and to result in watertight performance. Verify shapes and dimensions of surfaces to be covered before fabricating sheet metal.
3. Install exposed sheet metal flashing and trim without excessive oil canning, buckling, and tool marks.
4. Install sealant tape where indicated.
5. Torch cutting of sheet metal flashing and trim is not permitted.
6. Do not use graphite pencils to mark metal surfaces.

B. Metal Protection: Where dissimilar metals will contact each other or corrosive substrates, protect against galvanic action by painting contact surfaces with bituminous coating or by other permanent separation as recommended by SMACNA.

1. Coat back side of uncoated aluminum sheet metal flashing and trim with bituminous coating where flashing and trim will contact wood, ferrous metal, or cementitious construction.

C. Expansion Provisions: Provide for thermal expansion of exposed flashing and trim. Space movement joints at a maximum of 10 feet with no joints allowed within 24 inches of corner or intersection. Where lapped expansion provisions cannot be used or would not be sufficiently watertight, form expansion joints of intermeshing hooked flanges, not less than 1 inch deep, filled with sealant concealed within joints.

D. Fastener Sizes: Use fasteners of sizes that will penetrate wood sheathing not less than 1-1/4 inches for nails and not less than 3/4 inch for wood screws.

E. Seal joints as shown and as required for watertight construction.

1. Where sealant-filled joints are used, embed hooked flanges of joint members not less than 1 inch into sealant. Form joints to completely conceal sealant. When ambient temperature at time of installation is moderate, between 40 and 70 deg F , set joint members for 50 percent movement each way. Adjust setting proportionately for installation at higher ambient temperatures. Do not install sealant-type joints at temperatures below 40 deg F .
2. Prepare joints and apply sealants to comply with requirements in Division 07 Section "Joint Sealants."

F. Soldered Joints: Clean surfaces to be soldered, removing oils and foreign matter. Pre-tin edges of sheets to be soldered to a width of 1-1/2 inches , except reduce pre-tinning where pre-tinned surface would show in completed Work.

1. Do not solder metallic-coated steel and aluminum sheet.
2. Do not use torches for soldering. Heat surfaces to receive solder and flow solder into joint. Fill joint completely. Completely remove flux and spatter from exposed surfaces.

3.3 ROOF FLASHING INSTALLATION

A. General: Install sheet metal flashing and trim to comply with performance requirements and SMACNA's "Architectural Sheet Metal Manual." Provide concealed fasteners where possible, set units true to line, and level as indicated. Install work with laps, joints, and seams that will be permanently watertight and weather resistant.

B. Roof Edge Fascia: Anchor to resist uplift and outward forces according to recommendations in SMACNA's "Architectural Sheet Metal Manual" and as indicated. Interlock bottom edge of roof edge flashing with continuous cleat anchored to substrate at staggered 3-inch centers.

3.4 ERECTION TOLERANCES

A. Installation Tolerances: Shim and align sheet metal flashing and trim within installed tolerance of 1/4 inch in 20 feet on slope and location lines as indicated and within 1/8-inch offset of adjoining faces and of alignment of matching profiles.

B. Installation Tolerances: Shim and align sheet metal flashing and trim within installed tolerances specified in MCA's "Guide Specification for Residential Metal Roofing."

3.5 CLEANING AND PROTECTION

A. Clean exposed metal surfaces of substances that interfere with uniform oxidation and weathering.

B. Clean and neutralize flux materials. Clean off excess solder.

C. Clean off excess sealants.

D. Remove temporary protective coverings and strippable films as sheet metal flashing and trim are installed unless otherwise indicated in manufacturer's written installation instructions. On completion of installation, remove unused materials and clean finished surfaces. Maintain in a clean condition during construction.

E. Replace sheet metal flashing and trim that have been damaged or that have deteriorated beyond successful repair by finish touchup or similar minor repair procedures.

END OF SECTION 076200

THIS PAGE LEFT INTENTIONALLY BLANK

SECTION 077200 - ROOF ACCESSORIES

PART 1 - GENERAL

1.1 RELATED DOCUMENTS

A. Drawings and general provisions of the Contract, including General and Supplementary Conditions and Division 01 Specification Sections, apply to this Section.

1.2 SUMMARY

A. This Section includes the following:
1. Prefabricated Utility Chase Housing
2. Roof Hatch
3. Skylight
4. Prefabricated Pipe Flashing
5. Prefabricated Pipe Supports
6. Prefabricated Line Set Support
7. Prefabricated Duct Support Assembly
8. Prefabricated Gas Line Flashing
9. Prefabricated Coping
10. Prefabricated Refrigeration Condensing Unit Support Assembly
11. Miscellaneous Above-Roof Component Supports

B. Related Sections include the following:
1. Division 07 low-slope roofing Sections for roofing accessories.
2. Division 07 Section "Sheet Metal Flashing and Trim" for shop- and field-fabricated metal flashing and counterflashing, roof expansion-joint covers, and miscellaneous sheet metal trim and accessories.

1.3 SUBMITTALS

A. Product Data: For each type of roof accessory indicated. Include construction details, material descriptions, dimensions of individual components and profiles, and finishes.

B. Shop Drawings: Show fabrication and installation details for roof accessories. Show layouts of roof accessories including plans and elevations. Indicate dimensions, weights, loadings, required clearances, method of field assembly, and components. Include plans, elevations, sections, details, and attachments to other work.

C. Samples: For each type of exposed factory-applied finish required and for each type of roof accessory indicated, prepared on Samples of size to adequately show color.

1.4 QUALITY ASSURANCE

A. Sheet Metal Standard: Comply with SMACNA's "Architectural Sheet Metal Manual" details for fabrication of units, including flanges and cap flashing to coordinate with type of roofing indicated.

1.5 DELIVERY, STORAGE, AND HANDLING

A. Pack, handle, and ship roof accessories properly labeled in heavy-duty packaging to prevent damage.

1.6 PROJECT CONDITIONS

A. Field Measurements: Verify required openings for each type of roof accessory by field measurements before fabrication and indicate measurements on Shop Drawings.

1.7 COORDINATION

A. Coordinate layout and installation of roof accessories with roofing membrane and base flashing and interfacing and adjoining construction to provide a leakproof, weathertight, secure, and noncorrosive installation.

1. With Architect's approval, adjust location of roof accessories that would interrupt roof drainage routes.

PART 2 - PRODUCTS

2.1 METAL MATERIALS

A. PREFABRICATED UTILITY CHASE HOUSINGS

1. Provide products as manufactured by Smart Box Inc., PO box 507, Oakdale, New York 11769 (Ph 631-589-3151) or provide equal products by another manufacturer approved in advance by the Architect, based upon:

a. Smart Box Utility Chase Housing Model AL 701.

1) Housing size: 16 ½ inches long by 9 ¾ inches wide.
2) Housing height (without curb): 9 ½ inches.
3) Curb size: 15 ¼ inches by 8 ½ inches.
4) Curb height (without housing): 8 inches.
5) Material: Welded powder coated aluminum.
6) Seals: Provide seals for power, controls and refrigerant lines as required at each location. Coordinate with mechanical and electrical requirements.
7) Location: As shown on the Contract Drawings.

2.2 ROOF HATCH

A. Bilco Type 'E,' thermally-enhanced roof hatch, nominally 36 inches by 36 inches in opening size, for ladder-style access. Provide with integral cover and frame fabricated from 2.3 mm-thick aluminum. Frame and cover to be filled with 2-inch thick polyisocyanurate insulation.

1. Curb: 12" (305 mm) in height with integral capflashing, 2" (50 mm) polyisocyanurate insulation (R Value of 12), fully welded at corners, and 4-1/2" (114 mm) mounting flange with 7/16" holes (11 mm) provided for securing frame to the roof deck.

2. Gasket: Extruded EPDM rubber gasket permanently adhered to cover.

3. Hinges: Heavy-duty pintle hinges with 3/8" (9 mm) Type 316 stainless steel hinge pins.

4. Latch: Slam latch with interior and exterior turn handles and padlock hasps. Padlock by Owner.

5. Lift Assistance: Compression spring operators enclosed in telescopic tubes. Automatic hold-open arm with grip handle release.

6. Climbing Assistance: Vertically-extending and collapsing 2" by 2" steel bar, coated in bright yellow. Provide means of latching in and releasing from vertically-extended position as well as means of slowing the descent when released, to prevent injury. Provide grab handle or ring welded to top of bar.

7. Performance Ratings: Complies with UL 790 Class A (burning brand test).

8. Finish: Mill finish aluminum

9. Hardware: Engineered composite compression spring tubes and steel compression springs packed in grease. Type 316 stainless steel hinges. All other hardware is zinc plated/chromate sealed.

2.3 SKYLIGHT

A. Velux "CAP" Model pan-flashed commercial skylight. Provide thermo-formed, dual-dome, acrylic skylight system with seamless, fully-fused and corner-welded aluminum frame and insulated curb assembly having integral condensation gutter and counterflashing. Provide with clear, fall-protected and impact-resistant glazing. Unit to be fitted to outside-of-curb dimensions of approximately 2'-6" by 3'-0" or as necessary to suit roof opening where existing roof hatch above Teachers' Lounge is to be removed.

2.4 PREFABRICATED PIPE FLASHING

A. Provide products as manufactured by Thaler Metal Industries, 800-387-7217 (Mississauga, Ontario, Canada) or 1 800 576 1200 (New Braunfels, TX) or provide equal products by another manufacturer approved in advance by the Architect, based upon:

1. 20 year warrantee against leaks, condensation and defects in materials and manufacture, as applicable; compliance with CSA B272 93 (Prefabricated Self Sealing Roof Vent Flashings) air barrier design using EPDM seals only; maintenance free design; materials and sizes options, and thicknesses; treated deck flange, as applicable; written installation instructions.

2. New Standard Sloped Roof STACK JACK Flashing Vent stack flashing: SJ 45, 12" (305 mm) high;.064" (1.6 mm) mill finish 1100 0T alloy aluminum; sized to fit pipe diameter shown; with EPDM Triple Pressure Grommet Seal and EPDM Base Seal; bituminous painted deck flange.

2.5 PREFABRICATED PIPE, LINE AND DUCTWORK SUPPORTS AND FLASHING

A. Pipe Supports: Provide products as manufactured by Thaler Metal Industries, 800-387-7217 (Mississauga, Ontario, Canada) or 1 800 576 1200 (New Braunfels, TX) or provide equal products by another manufacturer approved in advance by the Architect, based upon:

1. Thaler Model MERS-600A, Pipe Support (single, plan pipe).

2. Height: 22" with 4" adjustment.

3. Description: Round hollow section of 6061-T aluminum support with threaded leg assembly for vertical adjustment and mounting plate; single stainless steel pipe roller assembly.

4. Spacing: as shown on the Construction Drawings.

5. 20 year warranty against leaks, condensation and defects in materials and manufacture, when installed in accordance with the manufacturer's installation instructions.

B. Line Set Supports (Multiple Lines): Thaler Model MERS-615A Pipe Support (double, plaln pipe) or Thaler Model MERS-630A Pipe Support System for piping support configurations with three or more pipes and/or pipes of varying diameters.
1. Height: 24" with 4" adjustment.
2. Description: Round hollow section of 6061-T aluminum support with threaded leg assembly for vertical adjustment and mounting plate; single stainless steel pipe roller assembly.
3. Spacing: as shown on the Construction Drawings.

C. Miscellaneous Above-Roof Component Supports: Provide pipe supports and flashing as specified for miscellaneous pipe penetrations where used to support vertical mounting members for electrical disconnect switches, junction boxes, power outlets and other miscellaneous above-roof components.

1. Where not otherwise specified or indicated, provide Thaler ARS-540-1-G upright angle supports for connection of UNISTRUT-type vertical channel supports.
2. Where not otherwise specified or indicated, provide Thaler ARS-400 upright pipe supports for connection of vertical pipe supports.
3. Provide 8" by 8" by ¼-inch thick under-deck plates for through-bolting of members through substrate roof deck.
4. Provide SJ-37 Stack-Jack urethane-insulated stainless steel sleeve and bituminous-coated flange for watreprroofing to roof membrane.

D. Gas Line Pipe Flashing (Natural Gas lines only): Thaler MEF-9 Modcon Gas Pipe Flashing
1. 12" high flashing
2. Perforated neck; removable cap with EPDM Triple Pressure Grommet Seal; 0.031" (0.79 mm) 22 Ga. Type 304 stainless steel and bituminous-painted deck flange.

E. Stacked Ductwork Support Assemblies:
1. Roof/Deck Anchorage: Thaler ARS 540-1-G Stack Jack Insulated Pipe/Flashing with Upright Angle Roof Support. Provide 1/4-inch thick by 12" by 12" base plate and under-deck plate for through-bolt attachment through the existing roof deck assembly, secured with four (4) 1/4-inch stainless steel through-bolts and nuts.
2. Stacked Duct Supports Posts and Horizontal Supports: UNISTRUT P1000 vertical channels (1-5/8" x 1-5/8" by 12 ga.) and P5500 horizontal channels (1-5/8" x 2-7/16" by 12 ga.). Angled braces to be UNISTRUT P2484 corner brace for lateral stiffness and moment resistance. Members to be hot-dipped galvanized. Provide stainless steel nuts bolts and washers. Provide for stainless steel strap to hold ductwork securely down to horizontal channel.

E. Single Ductwork Support: Thaler Metal Industries Model MERS-800A Duct Support

1. Height: 24” with 4” adjustment.
2. Description: A pair of round urethane insulated hollow sections of 6061-T6 aluminum supports with treaded assembly for vertical adjustment and mounting plate, mounting hardware and cross-bar carrier with EPDM end caps.
3. Spacing: as shown on the Construction Drawings.

2.6 PREFABRICATED REFRIGERATION CONDENSING UNIT SUPPORT ASSEMBLY

A. Support Frame: Thaler MERS-900A support frame, consisting of a minimum of four posts, 16" to 28" (406 mm to 711 mm) high adjustable height. Provide a minimum of two T-150 aluminum cross-bar carriers not to exceed a span of 6’-0”. Provide a minimum of two aluminum cross-ties.

B. Materials: 6061- T6 hollow aluminum pipe with mill finish, urethane insulated supports 2" (51 mm) dia., with stainless steel or galvanized steel hardware for through-fastening to structural roof deck, and cross-bar carrier of length to suit application, with EPDM end caps. Provide under-deck plates as indicated for attachment of through-bolts.

C. Hardware: All attachment screws and other hardware above the roof plane shall be stainless steel.

D. Flashing System: Provide anti-vibration pads and 1-1/2" (38 mm) dia. pipe section reinforcing ties; SJ-37 pre-insulated Stack-Jack flashing, 22 ga. Type 304 stainless steel, 2" (51 mm) dia., to CSA B272-93, with EPDM Triple Pressure Grommet Seal and EPDM Base Seal and bituminous painted deck flange.

2.7 PREFABRICATED METAL COPING SYSTEM

A. Provide products as manufactured by W. P. Hickman Company, PO Box 15005, Asheville NC 28813 (Ph 828 274-4031) or provide equal products by another manufacturer approved in advance by the Architect, based upon:

1. Continuous Cleat Parapet Wall Coping:
   a) Standards: Compliance with ANSI/SPRI ES-1
   b) Components: Continuous hold down clip.
   c) Components: Continuous coping saddle.
   d) Components: Snap on coping cap from 0.050” aluminum with a Kynar coating, post finished.
   e) Components: Concealed 6” wide splice plates with preformed channel for water control.
   f) Fabrication: Welded inside and outside corners, end caps and end terminations.
   g) Size: As detailed on the construction drawings.
   h) Location: As shown on the Contract Drawings.
   i) Warranty: Manufacturer’s Special Performance/20-Year Excel Warranty

2.8 MISCELLANEOUS MATERIALS

A. Fasteners: Same metal as metals being fastened, or nonmagnetic stainless steel or other noncorrosive metal as recommended by roof accessory manufacturer. Match finish of exposed fasteners with finish of material being fastened. Provide nonremovable fastener heads to exterior exposed fasteners.

B. Gaskets: Manufacturer's standard tubular or fingered design of neoprene, EPDM, or PVC; or flat design of foam rubber, sponge neoprene, or cork.

C. Elastomeric Sealant: ASTM C 920, polyurethane sealant; of type, grade, class, and use classifications required to seal joints in sheet metal flashing and trim and remain watertight.

D. Butyl Sealant: ASTM C 1311, single-component, solvent-release butyl rubber sealant, polyisobutylene, plasticized, and heavy bodied for hooked-type expansion joints with limited movement.

PART 3 - EXECUTION

3.1 EXAMINATION

A. Examine substrates, areas, and conditions, with Installer present, to verify actual locations, dimensions, and other conditions affecting performance of work.

1. Verify that substrate is sound, dry, smooth, clean, sloped for drainage, and securely anchored and is ready to receive roof accessories.
2. Verify dimensions of roof openings for roof accessories.
3. Proceed with installation only after unsatisfactory conditions have been corrected.

3.2 INSTALLATION

A. General: Install roof accessories according to manufacturer's written instructions. Anchor roof accessories securely in place and capable of resisting forces specified. Use fasteners, separators, sealants, and other miscellaneous items as required for completing roof accessory installation. Install roof accessories to resist exposure to weather without failing, rattling, leaking, and fastener disengagement.

B. Install roof accessories to fit substrates and to result in watertight performance.

C. Metal Protection: Where dissimilar metals will contact each other or corrosive substrates, protect against galvanic action by painting contact surfaces with bituminous coating or by other permanent separation as recommended by manufacturer.

1. Coat concealed side of roof accessories with bituminous coating where in contact with wood, ferrous metal, or cementitious construction.
2. Bed flanges in thick coat of asphalt roofing cement where required by roof accessory manufacturers for waterproof performance.

D. Install roof accessories level, plumb, true to line and elevation, and without warping, jogs in alignment, excessive oil canning, buckling, or tool marks. Level all equipment supports and rails as required for proper installation and operation of mechanical or electrical equipment placed thereupon.

E. Seal joints with elastomeric sealant as required by manufacturer of roof accessories.

3.3 TOUCH UP

A. Touch up factory-primed surfaces with compatible primer ready for field painting in accordance with Division 09 painting Sections.

B. Galvanized Surfaces: Clean field welds, bolted connections, and abraded areas and repair galvanizing to comply with ASTM A 780.

3.4 CLEANING

A. Clean exposed surfaces according to manufacturer's written instructions.

END OF SECTION 077200

SECTION 078413 - PENETRATION FIRESTOPPING

PART 1 - GENERAL

1.1 RELATED DOCUMENTS

A. Drawings and general provisions of the Contract, including General and Supplementary Conditions and Division 01 Specification Sections, apply to this Section.

1.2 SUMMARY

A. This Section includes through-penetration firestopping systems for penetrations through fire-resistance-rated constructions, including openings containing penetrating items that are installed as part of the work of this Contract.

B. Related Sections include the following:

1. Division 22 and 23 Sections specifying duct and piping penetrations.
2. Division 26 Sections specifying cable and conduit penetrations.

1.3 PERFORMANCE REQUIREMENTS

A. General: For penetrations through the following fire-resistance-rated constructions, including openings containing penetrating items installed as part of this Contract, provide through-penetration firestopping systems that are produced and installed to resist spread of fire according to requirements indicated, resist passage of smoke and other gases, and maintain original fire-resistance rating of construction penetrated.

1. Fire-resistance-rated walls including fire walls, fire partitions and fire barriers.

B. Rated Systems: Provide through-penetration firestopping systems with the following ratings determined per ASTM E 814 or UL 1479:

1. F-Rated Systems: Provide through-penetration firestopping systems with F-ratings indicated, but not less than that equaling or exceeding fire-resistance rating of constructions penetrated.
2. T-Rated Systems: For the following conditions, provide through-penetration firestopping systems with T-ratings indicated, as well as F-ratings, where systems protect penetrating items exposed to potential contact with adjacent materials in occupiable floor areas:

a. Penetrations located outside wall cavities.
b. Penetrations located outside fire-resistance-rated shaft enclosures.

3. L-Rated Systems: Where through-penetration firestopping systems are required in smoke barriers, provide through-penetration firestopping systems with L-ratings of not more than 3.0 cfm/sq. ft (0.01524cu. m/s x sq. m) at both ambient temperatures and 400 deg F (204 deg C).

C. For through-penetration firestopping systems exposed to view, provide products with flame-spread and smoke-developed indexes of less than 25 and 450, respectively, as determined per ASTM E 84.

1.4 SUBMITTALS

A. Product Data: For each type of product indicated.

B. Shop Drawings: For each through-penetration firestopping system, show each type of construction condition penetrated, relationships to adjoining construction, and type of penetrating item. Include firestopping design designation of qualified testing and inspecting agency that evidences compliance with requirements for each condition indicated.

1. Submit documentation, including illustrations, from a qualified testing and inspecting agency that is applicable to each through-penetration firestopping system configuration for construction and penetrating items.
2. Where Project conditions require modification to a qualified testing and inspecting agency's illustration for a particular through-penetration firestopping condition, submit illustration, with modifications marked, approved by through-penetration firestopping system manufacturer's fire-protection engineer as an engineering judgment or equivalent fire-resistance-rated assembly.

C. Through-Penetration Firestopping System Schedule: Indicate locations of each through-penetration firestopping system, along with the following information:

1. Types of penetrating items.
2. Types of constructions penetrated, including fire-resistance ratings and, where applicable, thicknesses of construction penetrated.
3. Through-penetration firestopping systems for each location identified by firestopping design designation of qualified testing and inspecting agency.

D. Qualification Data: For Installer.

E. Product Certificates: For through-penetration firestopping system products, signed by product manufacturer.

F. Product Test Reports: From a qualified testing agency indicating through-penetration firestopping system complies with requirements, based on comprehensive testing of current products.

1.5 QUALITY ASSURANCE

A. Installation Responsibility: Assign installation of through-penetration firestopping systems to the subcontractor responsible for making the penetration.

B. Source Limitations: Obtain through-penetration firestopping systems, for each kind of penetration and construction condition indicated, through one source from a single manufacturer.

C. Fire-Test-Response Characteristics: Provide through-penetration firestopping systems that comply with the following requirements and those specified in Part 1 "Performance Requirements" Article:
   1. Through-penetration firestopping systems are identical to those tested per testing standard referenced in "Part 1 Performance Requirements" Article. Provide rated systems complying with the following requirements:

      a. Through-penetration firestopping system products bear classification marking of qualified testing and inspecting agency.
      b. Through-penetration firestopping systems correspond to those indicated by reference to through-penetration firestopping system designations listed by the following:

         1) UL in its "Fire Resistance Directory."
         2) OPL in its "Directory of Listed Building Products, Materials, & Assemblies."
         3) ITS in its "Directory of Listed Products."

1.6 DELIVERY, STORAGE, AND HANDLING

A. Deliver through-penetration firestopping system products to Project site in original, unopened containers or packages with intact and legible manufacturers' labels identifying product and manufacturer, date of manufacture, lot number, shelf life if applicable, qualified testing and inspecting agency's classification marking applicable to Project, curing time, and mixing instructions for multicomponent materials.

B. Store and handle materials for through-penetration firestopping systems to prevent their deterioration or damage due to moisture, temperature changes, contaminants, or other causes.

1.7 PROJECT CONDITIONS

A. Environmental Limitations: Do not install through-penetration firestopping systems when ambient or substrate temperatures are outside limits permitted by through-penetration firestopping system manufacturers or when substrates are wet due to rain, frost, condensation, or other causes.

B. Ventilate through-penetration firestopping systems per manufacturer's written instructions by natural means or, where this is inadequate, forced-air circulation.

1.8 COORDINATION

A. Coordinate construction of openings and penetrating items to ensure that through-penetration firestopping systems are installed according to specified requirements.

B. Coordinate sizing of sleeves, openings, core-drilled holes, or cut openings to accommodate through-penetration firestopping systems.

C. Do not cover up through-penetration firestopping system installations that will become concealed behind other construction until each installation has been examined by Owner's representative and the building inspector.

PART 2 - PRODUCTS

2.1 MANUFACTURERS

A. Products: Subject to compliance with requirements, provide one of the through-penetration firestopping systems indicated for each application that are produced by one of the following manufacturers:

1. A/D Fire Protection Systems Inc.
2. Grace, W. R. & Co. - Conn.
3. Hilti, Inc.
4. Johns Manville.
5. Nelson Firestopping Products.
6. NUCO Inc.
7. RectorSeal Corporation (The).
8. Specified Technologies Inc.
9. 3M; Fire Protection Products Division.
10. Tremco; Sealant/Weatherproofing Division.
11. USG Corporation.

2.2 FIRESTOPPING, GENERAL

A. Compatibility: Provide through-penetration firestopping systems that are compatible with one another; with the substrates forming openings; and with the items, if any, penetrating through-penetration firestopping systems, under conditions of service and application, as demonstrated by through-penetration firestopping system manufacturer based on testing and field experience.

B. Accessories: Provide components for each through-penetration firestopping system that are needed to install fill materials and to comply with Part 1 "Performance Requirements" Article. Use only components specified by through-penetration firestopping system manufacturer and approved by qualified testing and inspecting agency for firestopping systems indicated. Accessories include, but are not limited to, the following items:

1. Permanent forming/damming/backing materials, including the following:

   a. Slag-/rock-wool-fiber insulation.
   b. Sealants used in combination with other forming/damming/backing materials to prevent leakage of fill materials in liquid state.
   c. Fire-rated form board.
   d. Fillers for sealants.

2. Temporary forming materials.
3. Substrate primers.
4. Collars.
5. Steel sleeves.

2.3 FILL MATERIALS

A. General: Provide through-penetration firestopping systems containing the types of fill materials indicated in the Through-Penetration Firestopping System Schedule at the end of Part 3 by referencing the types of materials described in this Article. Fill materials are those referred to in directories of referenced testing and inspecting agencies as "fill," "void," or "cavity" materials.

B. Latex Sealants: Single-component latex formulations that after cure do not re-emulsify during exposure to moisture.

C. Firestopping Devices: Factory-assembled collars formed from galvanized steel and lined with intumescent material sized to fit specific diameter of penetrant.

D. Intumescent Composite Sheets: Rigid panels consisting of aluminum-foil-faced elastomeric sheet bonded to galvanized steel sheet.

E. Intumescent Putties: Nonhardening dielectric, water-resistant putties containing no solvents, inorganic fibers, or silicone compounds.

F. Intumescent Wrap Strips: Single-component intumescent elastomeric sheets with aluminum foil on one side.

G. Mortars: Prepackaged dry mixes consisting of a blend of inorganic binders, hydraulic cement, fillers, and lightweight aggregate formulated for mixing with water at Project site to form a nonshrinking, homogeneous mortar.

H. Pillows/Bags: Reusable heat-expanding pillows/bags consisting of glass-fiber cloth cases filled with a combination of mineral-fiber, water-insoluble expansion agents, and fire-retardant additives.

I. Silicone Foams: Multicomponent, silicone-based liquid elastomers that, when mixed, expand and cure in place to produce a flexible, nonshrinking foam.

J. Silicone Sealants: Single-component, silicone-based, neutral-curing elastomeric sealants of grade indicated below:
   1. Grade for Vertical Surfaces: Nonsag formulation for openings in vertical and other surfaces.

2.4 MIXING

A. For those products requiring mixing before application, comply with through-penetration firestopping system manufacturer's written instructions for accurate proportioning of materials, water (if required), type of mixing equipment, selection of mixer speeds, mixing containers, mixing time, and other items or procedures needed to produce products of uniform quality with optimum performance characteristics for application indicated.

PART 3 - EXECUTION

3.1 EXAMINATION

A. Examine substrates and conditions, with Installer present, for compliance with requirements for opening configurations, penetrating items, substrates, and other conditions affecting performance of work.

   1. Proceed with installation only after unsatisfactory conditions have been corrected.

3.2 PREPARATION

A. Surface Cleaning: Clean out openings immediately before installing through-penetration firestopping systems to comply with firestopping system manufacturer's written instructions and with the following requirements:

1. Remove from surfaces of opening substrates and from penetrating items foreign materials that could interfere with adhesion of through-penetration firestopping systems.
2. Clean opening substrates and penetrating items to produce clean, sound surfaces capable of developing optimum bond with through-penetration firestopping systems. Remove loose particles remaining from cleaning operation.
3. Remove laitance and form-release agents from concrete.

B. Priming: Prime substrates where recommended in writing by through-penetration firestopping system manufacturer using that manufacturer's recommended products and methods. Confine primers to areas of bond; do not allow spillage and migration onto exposed surfaces.

C. Masking Tape: Use masking tape to prevent through-penetration firestopping systems from contacting adjoining surfaces that will remain exposed on completion of Work and that would otherwise be permanently stained or damaged by such contact or by cleaning methods used to remove smears from firestopping system materials. Remove tape as soon as possible without disturbing firestopping system's seal with substrates.

3.3 THROUGH-PENETRATION FIRESTOPPING SYSTEM INSTALLATION

A. General: Install through-penetration firestopping systems to comply with Part 1 "Performance Requirements" Article and with firestopping system manufacturer's written installation instructions and published drawings for products and applications indicated.

B. Install forming/damming/backing materials and other accessories of types required to support fill materials during their application and in the position needed to produce cross-sectional shapes and depths required to achieve fire ratings indicated.

1. After installing fill materials and allowing them to fully cure, remove combustible forming materials and other accessories not indicated as permanent components of firestopping systems.

C. Install fill materials for firestopping systems by proven techniques to produce the following results:

1. Fill voids and cavities formed by openings, forming materials, accessories, and penetrating items as required to achieve fire-resistance ratings indicated.
2. Apply materials so they contact and adhere to substrates formed by openings and penetrating items.
3. For fill materials that will remain exposed after completing Work, finish to produce smooth, uniform surfaces that are flush with adjoining finishes.

3.4 CLEANING AND PROTECTING

A. Clean off excess fill materials adjacent to openings as Work progresses by methods and with cleaning materials that are approved in writing by through-penetration firestopping system manufacturers and that do not damage materials in which openings occur.

B. Provide final protection and maintain conditions during and after installation that ensure that through-penetration firestopping systems are without damage or deterioration at time of Substantial Completion. If, despite such protection, damage or deterioration occurs, cut out and remove damaged or deteriorated through-penetration firestopping systems immediately and install new materials to produce systems complying with specified requirements.

END OF SECTION 078413

SECTION 079200 - JOINT SEALANTS

PART 1 - GENERAL

1.1 RELATED DOCUMENTS

A. Drawings and general provisions of the Contract, including General and Supplementary Conditions and Division 01 Specification Sections, apply to this Section.

1.2 SUMMARY

A. Section Includes:

1. Urethane joint sealants.

B. Related Sections:

1. Division 04 Section "Unit Masonry" for masonry control and expansion joint fillers and gaskets.
2. Division 09 Section "Gypsum Board" for sealing perimeter joints.
3. Division 09 Section "Acoustical Panel Ceilings" for sealing edge moldings at perimeters with acoustical sealant.

1.3 SUBMITTALS

A. Product Data: For each joint-sealant product indicated.

B. Samples for Initial Selection: Manufacturer's color charts consisting of strips of cured sealants showing the full range of colors available for each product exposed to view.

C. Qualification Data: For qualified Installer.

D. Product Certificates: For each kind of joint sealant and accessory, from manufacturer.

E. Sealant, Waterproofing, and Restoration Institute (SWRI) Validation Certificate: For each sealant specified to be validated by SWRI's Sealant Validation Program.

F. Product Test Reports: Based on evaluation of comprehensive tests performed by a qualified testing agency, indicating that sealants comply with requirements.

G. Warranties: Sample of special warranties.

1.4 QUALITY ASSURANCE

A. Installer Qualifications: Manufacturer's authorized representative who is trained and approved for installation of units required for this Project.

B. Source Limitations: Obtain each kind of joint sealant from single source from single manufacturer.

1.5 PROJECT CONDITIONS

A. Do not proceed with installation of joint sealants under the following conditions:

1. When ambient and substrate temperature conditions are outside limits permitted by joint-sealant manufacturer or are below 40 deg F.
2. When joint substrates are wet.
3. Where joint widths are less than those allowed by joint-sealant manufacturer for applications indicated.
4. Where contaminants capable of interfering with adhesion have not yet been removed from joint substrates.

1.6 WARRANTY

A. Special Installer's Warranty: Manufacturer's standard form in which Installer agrees to repair or replace joint sealants that do not comply with performance and other requirements specified in this Section within specified warranty period.

1. Warranty Period: Two years from date of Substantial Completion.

B. Special Manufacturer's Warranty: Manufacturer's standard form in which joint-sealant manufacturer agrees to furnish joint sealants to repair or replace those that do not comply with performance and other requirements specified in this Section within specified warranty period.

1. Warranty Period: 5 years from date of Substantial Completion.

C. Special warranties specified in this article exclude deterioration or failure of joint sealants from the following:

1. Movement of the structure caused by structural settlement or errors attributable to design or construction resulting in stresses on the sealant exceeding sealant manufacturer's written specifications for sealant elongation and compression.
2. Disintegration of joint substrates from natural causes exceeding design specifications.
3. Mechanical damage caused by individuals, tools, or other outside agents.

4. Changes in sealant appearance caused by accumulation of dirt or other atmospheric contaminants.

PART 2 - PRODUCTS

2.1 MATERIALS, GENERAL

A. Compatibility: Provide joint sealants, backings, and other related materials that are compatible with one another and with joint substrates under conditions of service and application, as demonstrated by joint-sealant manufacturer, based on testing and field experience.

B. Liquid-Applied Joint Sealants: Comply with ASTM C 920 and other requirements indicated for each liquid-applied joint sealant specified, including those referencing ASTM C 920 classifications for type, grade, class, and uses related to exposure and joint substrates.

1. Suitability for Immersion in Liquids. Where sealants are indicated for Use I for joints that will be continuously immersed in liquids, provide products that have undergone testing according to ASTM C 1247. Liquid used for testing sealants is deionized water, unless otherwise indicated.

C. Stain-Test-Response Characteristics: Where sealants are specified to be nonstaining to porous substrates, provide products that have undergone testing according to ASTM C 1248 and have not stained porous joint substrates indicated for Project.

D. Suitability for Contact with Food: Where sealants are indicated for joints that will come in repeated contact with food, provide products that comply with 21 CFR 177.2600.

E. Colors of Exposed Joint Sealants: To match adjacent finish color.

2.2 URETHANE JOINT SEALANTS

A. Single-Component, Nonsag, Urethane Joint Sealant: ASTM C 920, Type S, Grade NS, Class 100/50, for Use NT.

1. Products: Subject to compliance with requirements, available products that may be incorporated into the Work include, but are not limited to, the following:

a. Sika Corporation, Construction Products Division; Sikaflex - 15LM.
b. Tremco Incorporated; Vulkem 921.

B. Single-Component, Nonsag, Urethane Joint Sealant: ASTM C 920, Type S, Grade NS, Class 50, for Use NT.

1. Products: Subject to compliance with requirements, available products that may be incorporated into the Work include, but are not limited to, the following:

a. Pacific Polymers International, Inc.; Elasto-Thane 230 LM Type II.
b. Polymeric Systems, Inc.; PSI-901.

2.3 JOINT SEALANT BACKING

A. General: Provide sealant backings of material that are nonstaining; are compatible with joint substrates, sealants, primers, and other joint fillers; and are approved for applications indicated by sealant manufacturer based on field experience and laboratory testing.

B. Cylindrical Sealant Backings: ASTM C 1330, Type C (closed-cell material with a surface skin), and of size and density to control sealant depth and otherwise contribute to producing optimum sealant performance.

2.4 MISCELLANEOUS MATERIALS

A. Primer: Material recommended by joint-sealant manufacturer where required for adhesion of sealant to joint substrates indicated, as determined from preconstruction joint-sealant-substrate tests and field tests.

B. Cleaners for Nonporous Surfaces: Chemical cleaners acceptable to manufacturers of sealants and sealant backing materials, free of oily residues or other substances capable of staining or harming joint substrates and adjacent nonporous surfaces in any way, and formulated to promote optimum adhesion of sealants to joint substrates.

C. Masking Tape: Nonstaining, nonabsorbent material compatible with joint sealants and surfaces adjacent to joints.

PART 3 - EXECUTION

3.1 EXAMINATION

A. Examine joints indicated to receive joint sealants, with Installer present, for compliance with requirements for joint configuration, installation tolerances, and other conditions affecting joint-sealant performance.

B. Proceed with installation only after unsatisfactory conditions have been corrected.

3.2 PREPARATION

A. Surface Cleaning of Joints: Clean out joints immediately before installing joint sealants to comply with joint-sealant manufacturer's written instructions and the following requirements:

1. Remove all foreign material from joint substrates that could interfere with adhesion of joint sealant, including dust, paints (except for permanent, protective coatings tested and approved for sealant adhesion and compatibility by sealant manufacturer), old joint sealants, oil, grease, waterproofing, water repellents, water, surface dirt, and frost.
2. Clean porous joint substrate surfaces by brushing, grinding, mechanical abrading, or a combination of these methods to produce a clean, sound substrate capable of developing optimum bond with joint sealants. Remove loose particles remaining after cleaning operations above by vacuuming or blowing out joints with oil-free compressed air. Porous joint substrates include the following:

   a. Concrete.
   b. Masonry.
   c. Unglazed surfaces of ceramic tile.
   d. Fiber cement panel siding.

3. Remove laitance and form-release agents from concrete.
4. Clean nonporous joint substrate surfaces with chemical cleaners or other means that do not stain, harm substrates, or leave residues capable of interfering with adhesion of joint sealants. Nonporous joint substrates include the following:

   a. Metal.
   b. Glass.
   c. Glazed surfaces of ceramic tile.

B. Joint Priming: Prime joint substrates where recommended by joint-sealant manufacturer or as indicated by preconstruction joint-sealant-substrate tests or prior experience. Apply primer to comply with joint-sealant manufacturer's written instructions. Confine primers to areas of joint-sealant bond; do not allow spillage or migration onto adjoining surfaces.

C. Masking Tape: Use masking tape where required to prevent contact of sealant or primer with adjoining surfaces that otherwise would be permanently stained or damaged by such contact or by cleaning methods required to remove sealant smears. Remove tape immediately after tooling without disturbing joint seal.

3.3 INSTALLATION OF JOINT SEALANTS

A. General: Comply with joint-sealant manufacturer's written installation instructions for products and applications indicated, unless more stringent requirements apply.

B. Sealant Installation Standard: Comply with recommendations in ASTM C 1193 for use of joint sealants as applicable to materials, applications, and conditions indicated.

C. Install sealant backings of kind indicated to support sealants during application and at position required to produce cross-sectional shapes and depths of installed sealants relative to joint widths that allow optimum sealant movement capability.

1. Do not leave gaps between ends of sealant backings.
2. Do not stretch, twist, puncture, or tear sealant backings.
3. Remove absorbent sealant backings that have become wet before sealant application and replace them with dry materials.

D. Install bond-breaker tape behind sealants where sealant backings are not used between sealants and backs of joints.

E. Install sealants using proven techniques that comply with the following and at the same time backings are installed:

1. Place sealants so they directly contact and fully wet joint substrates.
2. Completely fill recesses in each joint configuration.
3. Produce uniform, cross-sectional shapes and depths relative to joint widths that allow optimum sealant movement capability.

F. Tooling of Nonsag Sealants: Immediately after sealant application and before skinning or curing begins, tool sealants according to requirements specified in subparagraphs below to form smooth, uniform beads of configuration indicated; to eliminate air pockets; and to ensure contact and adhesion of sealant with sides of joint.

1. Remove excess sealant from surfaces adjacent to joints.
2. Use tooling agents that are approved in writing by sealant manufacturer and that do not discolor sealants or adjacent surfaces.
3. Provide concave joint profile per Figure 8A in ASTM C 1193, unless otherwise indicated.
4. Provide flush joint profile where indicated per Figure 8B in ASTM C 1193.
5. Provide recessed joint configuration of recess depth and at locations indicated per Figure 8C in ASTM C 1193.

    a. Use masking tape to protect surfaces adjacent to recessed tooled joints.

3.4 FIELD QUALITY CONTROL

A. Evaluation of Field-Adhesion Test Results: Sealants not evidencing adhesive failure from testing or noncompliance with other indicated requirements will be considered satisfactory. Remove sealants that fail to adhere to joint substrates during testing or to comply with other requirements. Retest failed applications until test results prove sealants comply with indicated requirements.

3.5 CLEANING

A. Clean off excess sealant or sealant smears adjacent to joints as the Work progresses by methods and with cleaning materials approved in writing by manufacturers of joint sealants and of products in which joints occur.

3.6 PROTECTION

A. Protect joint sealants during and after curing period from contact with contaminating substances and from damage resulting from construction operations or other causes so sealants are without deterioration or damage at time of Substantial Completion. If, despite such protection, damage or deterioration occurs, cut out and remove damaged or deteriorated joint sealants immediately so installations with repaired areas are indistinguishable from original work.

3.7 JOINT-SEALANT SCHEDULE

A. Joint-Sealant Application: Exterior joints in vertical surfaces and horizontal nontraffic surfaces.

1. Joint Locations:

a. Control and expansion joints in unit masonry.
b. Joints between metal siding panels.
c. Joints between different materials listed above.
d. Perimeter joints between materials listed above and frames of doors windows and louvers.

2. Urethane Joint Sealant: Single component, nonsag, Class 100/50.
3. Joint-Sealant Color: As selected by Architect from manufacturer's full range of colors.

4. Joint-Sealant Color: As selected by Architect from manufacturer's full range of colors.

END OF SECTION 079200

THIS PAGE LEFT INTENTIONALLY BLANK

SECTION 081113 - HOLLOW METAL DOORS AND FRAMES

PART 1 - GENERAL

1.1 RELATED DOCUMENTS

A. Drawings and general provisions of the Contract, including General and Supplementary Conditions and Division 01 Specification Sections, apply to this Section.

1.2 SUMMARY

A. Section Includes:

1. Standard hollow metal doors and frames.

B. Related Sections:

1. Division 04 Section "Unit Masonry" for embedding anchors for hollow metal work into masonry construction.
2. Division 08 Section "Door Hardware" for door hardware for hollow metal doors.
3. Division 09 Sections "Exterior Painting" and "Interior Painting" for field painting hollow metal doors and frames.

1.3 DEFINITIONS

A. Minimum Thickness: Minimum thickness of base metal without coatings.

B. Standard Hollow Metal Work: Hollow metal work fabricated according to ANSI/SDI A250.8.

1.4 SUBMITTALS

A. Product Data: For each type of product indicated. Include construction details, material descriptions, core descriptions, fire-resistance rating, and finishes.

B. Shop Drawings: Include the following:

1. Elevations of each door design.
2. Details of doors, including vertical and horizontal edge details and metal thicknesses.
3. Frame details for each frame type, including dimensioned profiles and metal thicknesses.

4. Locations of reinforcement and preparations for hardware.

C. Other Action Submittals:

1. Schedule: Provide a schedule of hollow metal work prepared by or under the supervision of supplier, using same reference numbers for details and openings as those on Drawings. Coordinate with door hardware schedule.

D. Product Test Reports: Based on evaluation of comprehensive tests performed by a qualified testing agency, for each type of hollow metal door and frame assembly.

1.5 QUALITY ASSURANCE

A. Source Limitations: Obtain hollow metal work from single source from single manufacturer.

1.6 DELIVERY, STORAGE, AND HANDLING

A. Deliver hollow metal work palletized, wrapped, or crated to provide protection during transit and Project-site storage. Do not use non-vented plastic.

1. Provide additional protection to prevent damage to finish of factory-finished units.

B. Deliver welded frames with two removable spreader bars across bottom of frames, tack welded to jambs and mullions.

C. Store hollow metal work under cover at Project site. Place in stacks of five units maximum in a vertical position with heads up, spaced by blocking, on minimum 4-inch- high wood blocking. Do not store in a manner that traps excess humidity.

1. Provide minimum 1/4-inch space between each stacked door to permit air circulation.

1.7 PROJECT CONDITIONS

A. Field Measurements: Verify actual dimensions of openings by field measurements before fabrication.

1.8 COORDINATION

A. Coordinate installation of anchorages for hollow metal frames. Furnish setting drawings, templates, and directions for installing anchorages, including sleeves,

concrete inserts, anchor bolts, and items with integral anchors. Deliver such items to Project site in time for installation.

PART 2 - PRODUCTS

2.1 MANUFACTURERS

A. Manufacturers: Subject to compliance with requirements, [provide products by one of the following] available manufacturers offering products that may be incorporated into the Work include, but are not limited to, the following:

1. Amweld Building Products, LLC.
2. Benchmark; a Division of Therma-Tru Corporation.
3. Curries Company; an Assa Abloy Group company.
4. Steelcraft; an Ingersoll-Rand company.
5. Windsor Republic Doors.

2.2 MATERIALS

A. Cold-Rolled Steel Sheet: ASTM A 1008/A 1008M, Commercial Steel (CS), Type B; suitable for exposed applications.

B. Hot-Rolled Steel Sheet: ASTM A 1011/A 1011M, Commercial Steel (CS), Type B; free of scale, pitting, or surface defects; pickled and oiled.

C. Metallic-Coated Steel Sheet: ASTM A 653/A 653M, Commercial Steel (CS), Type B; with minimum G60 or A60 metallic coating.

D. Frame Anchors: ASTM A 591/A 591M, Commercial Steel (CS), 40Z coating designation; mill phosphatized.

1. For anchors built into exterior walls, steel sheet complying with ASTM A 1008/A 1008M or ASTM A 1011/A 1011M, hot-dip galvanized according to ASTM A 153/A 153M, Class B.

E. Inserts, Bolts, and Fasteners: Hot-dip galvanized according to ASTM A 153/A 153M.

F. Powder-Actuated Fasteners in Concrete: Fastener system of type suitable for application indicated, fabricated from corrosion-resistant materials, with clips or other accessory devices for attaching hollow metal frames of type indicated.

G. Grout: ASTM C 476, except with a maximum slump of 4 inches, as measured according to ASTM C 143/C 143M.

H. Mineral-Fiber Insulation: ASTM C 665, Type I (blankets without membrane facing); consisting of fibers manufactured from slag or rock wool with 6- to 12-lb/cu. ft. density; with maximum flame-spread and smoke-development indexes of 25 and 50, respectively; passing ASTM E 136 for combustion characteristics.

I. Glazing: Comply with requirements in Division 08 Section "Glazing."

J. Bituminous Coating: Cold-applied asphalt mastic, SSPC-Paint 12, compounded for 15-mil dry film thickness per coat. Provide inert-type noncorrosive compound free of asbestos fibers, sulfur components, and other deleterious impurities.

2.3 STANDARD HOLLOW METAL DOORS

A. General: Provide doors of design indicated, not less than thickness indicated; fabricated with smooth surfaces, without visible joints or seams on exposed faces unless otherwise indicated. Comply with ANSI/SDI A250.8.

1. Design: Flush panel.
2. Core Construction: Manufacturer's standard kraft-paper honeycomb, polystyrene, polyurethane, polyisocyanurate, mineral-board, or vertical steel-stiffener core.
   a. Thermal-Rated (Insulated) Doors: Where indicated, provide doors fabricated with thermal-resistance value (R-value) of not less than 6.0 deg F x h x sq. ft./Btu when tested according to ASTM C 1363.

      1) Locations: Exterior doors.

3. Vertical Edges for Single-Acting Doors: Square edge.
4. Top and Bottom Edges: Closed with flush or inverted 0.042-inch- thick, end closures or channels of same material as face sheets.
5. Tolerances: Comply with SDI 117, "Manufacturing Tolerances for Standard Steel Doors and Frames."

B. Exterior Door(s): Face sheets fabricated from metallic-coated steel sheet. Provide doors complying with requirements indicated below by referencing ANSI/SDI A250.8 for level and model and ANSI/SDI A250.4 for physical performance level:

1. Level 3 and Physical Performance Level A (Extra Heavy Duty), Model 1 (Full Flush).

   a. Width: 1-3/4 inches.

C. Interior Door(s):

1. Level 2 and Physical Performance Level B (Heavy Duty), Model 1 (Full Flush).

a. Width: 1-3/4 inches.

D. Hardware Reinforcement: Fabricate according to ANSI/SDI A250.6 with reinforcing plates from same material as door face sheets.

E. Fabricate concealed stiffeners and hardware reinforcement from either cold- or hot-rolled steel sheet.

2.4 STANDARD HOLLOW METAL FRAMES

A. General: Comply with ANSI/SDI A250.8 and with details indicated for type and profile.

B. Exterior Frames: Fabricated from metallic-coated steel sheet.

1. Fabricate frames with mitered or coped corners.
2. Fabricate frames as full profile welded unless otherwise indicated.
3. Frame(s) for Level 3 Steel Doors: 0.067 inch-thick steel sheet.
4. Frame(s) for Level 2 Steel Doors: 0.053 inch-thick steel sheet.

C. Hardware Reinforcement: Fabricate according to ANSI/SDI A250.6 with reinforcement plates from same material as frames.

2.5 FRAME ANCHORS

A. Jamb Anchors:
1. Masonry Type: Adjustable strap-and-stirrup or T-shaped anchors to suit frame size, not less than 0.042 inch thick, with corrugated or perforated straps not less than 2 inches wide by 10 inches

2.6 ACCESSORIES

A. Grout Guards: Formed from same material as frames, not less than 0.016 inch thick.

2.7 FABRICATION

A. Fabricate hollow metal work to be rigid and free of defects, warp, or buckle. Accurately form metal to required sizes and profiles, with minimum radius for thickness of metal. Where practical, fit and assemble units in manufacturer's plant.

To ensure proper assembly at Project site, clearly identify work that cannot be permanently factory assembled before shipment.

B. Tolerances: Fabricate hollow metal work to tolerances indicated in ANSI/NAAMM-HMMA 861.

C. Hollow Metal Doors:

1. Exterior Doors: Provide weep-hole openings in bottom of exterior doors to permit moisture to escape. Seal joints in top edges of doors against water penetration.

D. Hollow Metal Frames: Where frames are fabricated in sections due to shipping or handling limitations, provide alignment plates or angles at each joint, fabricated of same thickness metal as frames.

1. Welded Frames: Weld flush face joints continuously; grind, fill, dress, and make smooth, flush, and invisible.
2. Grout Guards: Weld guards to frame at back of hardware mortises in frames to be grouted.
3. Floor Anchors: Weld anchors to bottom of jambs and mullions with at least four spot welds per anchor.
4. Jamb Anchors: Provide number and spacing of anchors as follows:

a. Masonry Type: Locate anchors not more than 18 inches from top and bottom of frame. Space anchors not more than 32 inches o.c. and as follows:

1) Two anchors per jamb up to 60 inches high.
2) Three anchors per jamb from 60 to 90 inches high.
3) Four anchors per jamb from 90 to 120 inches high.
4) Four anchors per jamb plus 1 additional anchor per jamb for each 24 inches or fraction thereof above 120 inches high.

5. Door Silencers: Except on weather-stripped doors, drill stops to receive door silencers as follows. Keep holes clear during construction.

a. Single-Door Frames: Drill stop in strike jamb to receive three door silencers.

E. Fabricate concealed stiffeners, edge channels, and hardware reinforcement from either cold- or hot-rolled steel sheet.

F. Hardware Preparation: Factory prepare hollow metal work to receive templated mortised hardware; include cutouts, reinforcement, mortising, drilling, and tapping according to the Door Hardware Schedule and templates furnished as specified in Division 08 Section "Door Hardware."

1. Locate hardware as indicated, or if not indicated, according to ANSI/NAAMM-HMMA 861.
2. Reinforce doors and frames to receive nontemplated, mortised and surface-mounted door hardware.
3. Comply with applicable requirements in ANSI/SDI A250.6 and ANSI/DHI A115 Series specifications for preparation of hollow metal work for hardware.

2.8 STEEL FINISHES

A. Prime Finish: Apply manufacturer's standard primer immediately after cleaning and pretreating.

1. Shop Primer: Manufacturer's standard, fast-curing, lead- and chromate-free primer complying with ANSI/SDI A250.10 acceptance criteria; recommended by primer manufacturer for substrate; compatible with substrate and field-applied coatings despite prolonged exposure.

PART 3 - EXECUTION

3.1 EXAMINATION

A. Examine substrates, areas, and conditions, with Installer present, for compliance with requirements for installation tolerances and other conditions affecting performance of the Work.

B. Examine roughing-in for embedded and built-in anchors to verify actual locations before frame installation.

C. For the record, prepare written report, endorsed by Installer, listing conditions detrimental to performance of the Work.

D. Proceed with installation only after unsatisfactory conditions have been corrected.

3.2 PREPARATION

A. Remove welded-in shipping spreaders installed at factory. Restore exposed finish by grinding, filling, and dressing, as required to make repaired area smooth, flush, and invisible on exposed faces.

B. Prior to installation, adjust and securely brace welded hollow metal frames for squareness, alignment, twist, and plumbness to the following tolerances:

1. Squareness: Plus or minus 1/16 inch, measured at door rabbet on a line 90 degrees from jamb perpendicular to frame head.
2. Alignment: Plus or minus 1/16 inch, measured at jambs on a horizontal line parallel to plane of wall.
3. Twist: Plus or minus 1/16 inch, measured at opposite face corners of jambs on parallel lines, and perpendicular to plane of wall.
4. Plumbness: Plus or minus 1/16 inch, measured at jambs on a perpendicular line from head to floor.

C. Drill and tap doors and frames to receive nontemplated, mortised, and surface-mounted door hardware.

3.3 INSTALLATION

A. General: Install hollow metal work plumb, rigid, properly aligned, and securely fastened in place; comply with Drawings and manufacturer's written instructions.

B. Hollow Metal Frames: Install hollow metal frames of size and profile indicated. Comply with HMMA 840.

1. Set frames accurately in position, plumbed, aligned, and braced securely until permanent anchors are set. After wall construction is complete, remove temporary braces, leaving surfaces smooth and undamaged.

a. At fire-protection-rated openings, install frames according to NFPA 80.
b. Where frames are fabricated in sections because of shipping or handling limitations, field splice at approved locations by welding face joint continuously; grind, fill, dress, and make splice smooth, flush, and invisible on exposed faces.
c. Install frames with removable glazing stops located on secure side of opening.
d. Install door silencers in frames before grouting.
e. Remove temporary braces necessary for installation only after frames have been properly set and secured.
f. Check plumbness, squareness, and twist of frames as walls are constructed. Shim as necessary to comply with installation tolerances.
g. Field apply bituminous coating to backs of frames that are filled with grout containing anti-freezing agents.

2. Floor Anchors: Provide floor anchors for each jamb and mullion that extends to floor, and secure with post-installed expansion anchors.

a. Floor anchors may be set with powder-actuated fasteners instead of post-installed expansion anchors if so indicated and approved on Shop Drawings.

3. Masonry Walls: Coordinate installation of frames to allow for solidly filling space between frames and masonry with grout.
4. Installation Tolerances: Adjust hollow metal door frames for squareness, alignment, twist, and plumb to the following tolerances:

    a. Squareness: Plus or minus 1/16 inch, measured at door rabbet on a line 90 degrees from jamb perpendicular to frame head.
    b. Alignment: Plus or minus 1/16 inch, measured at jambs on a horizontal line parallel to plane of wall.
    c. Twist: Plus or minus 1/16 inch, measured at opposite face corners of jambs on parallel lines, and perpendicular to plane of wall.
    d. Plumbness: Plus or minus 1/16 inch, measured at jambs at floor.

C. Hollow Metal Doors: Fit hollow metal doors accurately in frames, within clearances specified below. Shim as necessary.

1. Non-Fire-Rated Standard Steel Doors:

    a. Jambs and Head: 1/8 inch plus or minus 1/16 inch.
    b. Between Edges of Pairs of Doors: 1/8 inch plus or minus 1/16 inch.
    c. Between Bottom of Door and Top of Threshold: Maximum 3/8 inch.
    d. Between Bottom of Door and Top of Finish Floor (No Threshold): Maximum 3/4 inch.

3.4 ADJUSTING AND CLEANING

A. Final Adjustments: Check and readjust operating hardware items immediately before final inspection. Leave work in complete and proper operating condition. Remove and replace defective work, including hollow metal work that is warped, bowed, or otherwise unacceptable.

B. Remove grout and other bonding material from hollow metal work immediately after installation.

C. Prime-Coat Touchup: Immediately after erection, sand smooth rusted or damaged areas of prime coat and apply touchup of compatible air-drying, rust-inhibitive primer.

D. Metallic-Coated Surfaces: Clean abraded areas and repair with galvanizing repair paint according to manufacturer's written instructions.

END OF SECTION 081113

THIS PAGE LEFT INTENTIONALLY BLANK

SECTION 087100 - DOOR HARDWARE

PART 1 - GENERAL

1.1 SUMMARY:

A. Section Includes: Finish Hardware for swinging doors.
   1. Provide all components including fasteners, brackets and accessories required for complete, properly functioning and operable openings.

B. Related Sections

   1. Division 08 Section 081113, "Hollow Metal Doors and Frames."
   2. Division 08 Section 081416, "Flush Wood Doors."
   3. Division 26 Sections pertaining to electrical work related to electric locks, including, but not limited to, electrical conduit, boxes, wiring devices, low-voltage transformers and conductors.

C. References

National Fire Protection Association
NFPA 80 Standard for Fire Doors and Other Opening Protectives
Builders Hardware Manufacturers Association
ANSI/BHMA A156.1 Butts & Hinges
ANSI/BHMA A156.2 Bored and Preassembled Locks and Latches
ANSI/BHMA A156.3 Exit Devices
ANSI/BHMA A156.4 Door Controls - Closers
ANSI/BHMA A156.18 Materials and Finishes
ADA Standards for Accessible Design
Door and Hardware Institute (DHI)
Keying Systems and Nomenclature
Sequence and Format
Recommended Locations for Architectural Hardware for Standard Steel Doors and Frames.
Recommended Locations for Architectural Hardware for Flush Wood Doors.

1.2 SUBSTITUTIONS:

A. Comply with Division 1

1.3 SUBMITTALS:

A. Comply with Division 1

B. Product Data: Submit 6 copies which include technical data indicating design, grade, function and relevant accessories of each hardware item indicated in the hardware sets. Highlight in some manner only information relative to the

scheduled products. Provide wiring riser and point to point diagrams for all openings scheduled with electrified hardware. Indicate all electrical requirements including amps and voltages for each electrified item.

C. Shop Drawings: Submit 6 copies of a detailed Hardware Schedule in a vertical format as outlined in the DHI publication "Sequence and Format." Include the following:

1. Door numbers corresponding to Architects door numbers as indicated on the architectural drawings.
2. Manufacturers List of each hardware product group scheduled
3. Abbreviations List

D. Templates: Submit templates and "reviewed Hardware Schedule" to door and frame supplier and others as applicable to enable timely door and frame preps.

E. Samples: Furnish as requested by the Architect.

F. Contract Closeout Submittals: Comply with Division 1 including specific requirements indicated.

1. Operating and maintenance manuals: Submit the following in a three ring binder:

a. "As Built" Hardware Schedule.
b. Catalog Cuts.
c. Installation instructions for each hardware item.
d. Warranties.
e. Approved Keying Schedule.
f. Point to point and Riser diagrams for each opening scheduled with electrified hardware.

QUALITY ASSURANCE

G. Comply with Division 1.

1. Statement of qualification for distributor and installers.
2. Statement of compliance with regulatory requirements and single source responsibility.
3. Distributor's Qualifications: Firm with 3 years experience in the distribution of commercial hardware.

a. Distributor to employ a full time Architectural Hardware Consultant for the purpose of scheduling and coordinating hardware, establishing a keying schedule and be available for consultation at reasonable times throughout the project until final completion..

4. Installer's Qualifications: Firm with 3 years experienced in installation of similar hardware to that required for this Project, including specific requirements indicated.
5. Regulatory Label Requirements: Provide testing agency label or stamp on hardware for labeled openings.

    a. Provide UL listed hardware for labeled and 20 minute openings in conformance with requirements for class of opening scheduled.
    b. Underwriters Laboratories requirements have precedence over this specification where conflict exists.
    c. Provide and install hardware for fire rated openings in conformance with NFPA 80.

6. Single Source Responsibility: Except where specified in hardware schedule, furnish products of only one manufacturer for each type of hardware.

1.4 DELIVERY, STORAGE, AND HANDLING

A. Packing and Shipping: Comply with Division 1.

1. Deliver products in original unopened packaging with legible manufacturer's identification.
2. Package hardware to prevent damage during transit and storage.
3. Mark hardware to correspond with "reviewed hardware schedule".

B. Storage and Protection: Store hardware in a clean, dry, secure area.

1.5 PROJECT CONDITIONS:

A. Coordinate hardware with other work. Furnish hardware items of proper design for use on doors and frames of the thickness, profile, swing, security and similar requirements indicated, as necessary for the proper installation and function, regardless of omissions or conflicts in the information on the Contract Documents.

B. Review Shop Drawings for doors and entrances to confirm that adequate provisions will be made for the proper installation of hardware.

1.6 WARRANTY:

A. Refer to Conditions of the Contract

B. Manufacturer’s Warranty:

1. Closers: Ten years
2. Exit Devices: Three Years
3. Exit Devices Electrified: One Year

4. Locksets: Three years

1.7 OWNER'S INSTRUCTION:

A. Instruct Owner's personnel in operation and maintenance of hardware units.

1.8 MAINTENANCE:

A. Extra Materials: provide owner with any manufacture's product installation tools and remaining fasteners at project completion.

PART 2 - PRODUCTS

2.1 MANUFACTURERS:

A. Manufacturers and manufacturer's product model numbers indicated in the Hardware Sets are listed below with an asterisk. Acceptable manufacturers are listed without an asterisk.

Item:	Manufacturer:	Acceptable:
Hinges	*Stanley	Hager, Ives
Locksets	*Best	Sargent, Schlage
Exit Devices	*Precision	Von Duprin, Sargent
Closers	*Stanley	Corbin, Sargent
Push / Pulls	*Rockwood	Trimco, Hager
Protective Plates	*Rockwood	Trimco, Hager
Stops	*Rockwood	Trimco, Hager
OH Stops	*ABH	Rockwood, Glynn Johnson
Flush Bolts	*Rockwood	Trimco, Hager
Wall Stops	*Rockwood	Trimco, Hager
Weatherstrip	*National Guard	Pemko, Reese
Thresholds	*National Guard	Pemko, Reese
Smoke Seal	*National Guard	Pemko, Reese

2.2 MATERIALS:

A. Hinges:

1. Certified to ANSI/BHMA A156.1.
2. Provide hinges for fire rated doors conforming to NFPA 80
3. Furnish heavy weight hinges at high frequency or high abuse locations and as indicted in the hardware sets
4. Provide hinge types as listed in schedule.
5. Furnish 3 hinges per leaf to 7 foot 6 inch height. Add one for each additional 30 inches in height or fraction thereof.
6. Furnish NRP (Non Removable Pin) on hinges at all reverse bevel exterior doors and as indicated in the hardware sets.

B. Cylindrical Locks and Latches:

1. Best 93K Series 15D lever trim, configured for removable cores. Certified to ANSI/BHMA A156.2 Series 4000, Operational Grade 1, Extra-Heavy Duty, Security Grade 2, UL10C-1998 listed.
2. Functions and design as indicated in the hardware groups
3. Provide strike box at each lock location.
4. Provide lever trim with roses, including at matching dummy lever trim.
5. Provide strike of sufficient lip length to clear wall and frame trim.

C. Cylinders:
1. Owner to provide Best cores, 7-pin.

D. Door Closers:

1. Certified to ANSI/BHMA A156.4 Grade 1, modern-type with cover.
2. Conform to ADAAG for opening and closing requirements.
3. Separate adjusting valves for closing and latching speed, and backcheck.
4. Provide adapter plates, shim spacers and blade stop spacers as required by frame and door conditions.
5. Furnish with adjustable spring power.
6. Mount closers on non-public side of door, unless otherwise noted in specification.
7. Closers shall be non-handed, non-sized and multi-sized 1 through 6.

E. Overhead Door Holders: ANSI/BHMA A156.8, Grade 1, from stainless steel or stain anodized aluminum.

F. Protection Plates: Stainless steel, not less than 0.062 inch thick. Furnish with four beveled edges, by door width less 2 (two) inches on single doors and 1 inch less door width on pairs of doors, unless indicated otherwise in hardware sets. Furnish oval-head countersunk screws to match finish. Kickplates to be 10 (ten) inches in height.

G. Thresholds: Aluminum, mill finish, type required for outswing pair of doors. Provide with thermal barrier and neoprene gasket applied to raised stop. Provide similar and/or equal to Pemko No. 278 x 224 FGT. Furnish with stainless steel machine screws and expansion shields.

H. Weatherstripping: at head and jambs.

I. Rain Drips: At exterior, outswinging doors, provide door bottom rain drip the full width of each leaf fabricated from satin anodized aluminum or stainless steel with an integral rubber bottom sweep equal to Pemko 345-V. Provide a continuous overhead rain drip fabricated from satin anodized aluminum or stainless steel mounted to head of door frame equal to Pemko 346, length

equal to the full width of door frame. Secure drips with stainless steel or aluminum screws.

J. Flush Bolts: Lever-type, stainless steel, with 3/4-inch bolt throw. Provide extended rods as required by door height to engage in strike to properly secure door at head and sill. Provide manufacturer's dust proof strikes.

L. Overhead Stops: Furnish at all doors where wall stops or closer stop arms are not feasible.

M. Wall Stops: Gray rubber convex bumper in satin aluminum rose trim. Provide concealed fasteners applicable for wall types and conditions.

2.3 FINISHES:

A. Provide finishes as scheduled. Use manufacturer's standard finishes conforming to ANSI/BHMA A156.18 including coordination with traditional U.S. finishes shown by certain manufacturers for their products. Match finishes as closely as possible between products. General Finishes scheduled: 626 Satin Chromium, 630 Satin Stainless Steel, 689 Sprayed Aluminum Closers, 628 Aluminum or Mill finish.

PART 3 - EXECUTION

3.1 EXAMINATION

A. Verification of conditions: Examine doors, frames, related items and conditions under which Work is to be performed and identify conditions detrimental to proper and or timely completion.

1. Do not proceed until unsatisfactory conditions have been corrected.

3.2 HARDWARE LOCATIONS:

A. Mount hardware units at heights indicated in the following publications except as specifically indicated or required to comply with the governing regulations.

1. Recommended Locations for Architectural Hardware for Standard Steel Doors and Frames

3.3 INSTALLATION:

A. Install each hardware item per manufacturer's instructions and recommendations. Do not install surface mounted items until finishes have been completed on the substrate. Set units level, plumb and true to line and location. Adjust and reinforce the attachment substrate as necessary for proper installation and operation.

B. Install conforming to ADAAG for mounting heights, operational closer requirements, and other ADA requirements.

C. Installed hardware using the manufacturers fasteners provided. Drill and tap all screw holes located in metallic materials.

3.4 FIELD QUALITY CONTROL AND FINAL ADJUSTMENT

A. After installation is complete, inspect completed door openings on site to verify installation of hardware is complete and properly adjusted, in accordance with both the Contract Documents and final shop drawings.

1. Report findings, in writing, to the Architect that all hardware is installed properly and provides complete, properly functioning, operating openings. Indicate corrective actions and recommendations if necessary for compliance.

3.5 SCHEDULE OF FINISH HARDWARE:

Set #1, Exterior Pair Doors, Access to Area 'C' Electrical Room, for each Pair:

3	Pr.	Hinges	(3 per leaf)	A5111 x Grade 1 x 630
1	Ea.	O/H Closer	(Active leaf)	C02021 x Grade 1 x 689
2	Ea.	O/H Holders	(1 per leaf)	C02511 x Grade 1 x 628 or 630
1	Ea.	Bored Lockset	(Active leaf)	4000 x F86 x GR1 x 630
1	Ea.	Bored Deadbolt	(Active leaf)	E0151 x GR1 x 630
1	Ea.	Dummy Trim	(Inactive leaf)	Fixed lever to match active leaf
1	Pr.	Flush Bolts	(Inactive leaf)	Mortise, lever extension x 630
4	Ea.	Kickplates	(2 per leaf)	As specified x 630, each side of door
1	Set	Weatherstripping	As specified	
2	Ea.	Bottom Sweep	As specified	
1	Ea.	Overhead Drip Fin	As specified	
1	Ea.	Threshold	As specified	

Set #2, Exterior Single Door, Egress from Area 'C' Kitchen, per leaf:

1-1/2	Pr.	Hinges	A5111 x Grade 1 x 630
1	Ea.	O/H Closer	C02021 x Grade 1 x 689
1	Ea.	O/H Holder	C02511 x Grade 1 x 628 or 630
1	Ea.	Bored Lockset	4000 x F81 x GR1 x 630
2	Ea.	Kickplates	As specified x 630, each side of door
1	Set	Weatherstripping	As specified
2	Ea.	Bottom Sweep	As specified
1	Ea.	Overhead Drip Fin	As specified
1	Ea.	Threshold	As specified

Set #3, Interior Door, Access to Service Room 115A, per Leaf (45-minute fire-rated):

1-1/2	Pr.	Hinges	A5111 x Grade 1 x 630
1	Ea.	O/H Closer	C02021 x Grade 1 x 689
1	Ea.	Bored Lockset	4000 x F81 x GR1 x 630
2	Ea.	Kickplate	As specified, each side of door
1	Ea.	Wall Stop	As specified

END OF SECTION 087100

SECTION 092216 - NON-STRUCTURAL METAL FRAMING

PART 1 - GENERAL

1.1 RELATED DOCUMENTS

A. Drawings and general provisions of the Contract, including General and Supplementary Conditions and Division 01 Specification Sections, apply to this Section.

1.2 SUMMARY

A. This Section includes non-load-bearing steel framing members for the following applications:

1. Interior framing systems (e.g., supports for partition walls, framed soffits, furring, etc.).

B. Related Sections include the following:

1. Division 05 Section "Cold-Formed Metal Framing" for exterior and interior load-bearing and exterior non-load-bearing wall studs; floor joists; roof rafters and ceiling joists; and roof trusses.
2. Division 09 Section "Gypsum Board" for wall finish over non-load bearing wall and soffit framing.

1.3 SUBMITTALS

A. Product Data: For each type of product indicated.

PART 2 - PRODUCTS

2.1 NON-LOAD-BEARING STEEL FRAMING, GENERAL

A. Framing Members, General: Comply with ASTM C 754 for conditions indicated.

1. Steel Sheet Components: Comply with ASTM C 645 requirements for metal, unless otherwise indicated.
2. Protective Coating: the manufacturer's standard rust-inhibiting coating or hot-dip galvanized, unless otherwise indicated.

2.2 STEEL FRAMING FOR FRAMED ASSEMBLIES

A. Steel Studs and Runners: ASTM C 645.

1. Minimum Base-Metal Thickness: **0.033 inch (0.84 mm)**.
2. Depth: As indicated on Drawings.

B. Flat Strap and Backing Plate: Steel sheet for blocking and bracing in length and width indicated.

1. Minimum Base-Metal Thickness: **0.0312 inch (0.79 mm)**.

C. Cold-Rolled Channel Bridging: 0.0538-inch (1.37-mm) bare-steel thickness, with minimum 1/2-inch- (12.7-mm-) wide flanges.

1. Depth: **1-1/2 inches (38.1 mm)**.
2. Clip Angle: Not less than 1-1/2 by 1-1/2 inches (38.1 by 38.1 mm), 0.068-inch- (1.73-mm-) thick, galvanized steel.

D. Hat-Shaped, Rigid Furring Channels and Angles: ASTM C 645.

1. Minimum Base Metal Thickness: **0.0312 inch (0.79 mm)**
2. **7/8 inch (22.2 mm)**.
3. Angles as sized on the Construction Drawings.

2.3 AUXILIARY MATERIALS

A. General: Provide auxiliary materials that comply with referenced installation standards.

1. Fasteners for Metal Framing: Of type, material, size, corrosion resistance, holding power, and other properties required to fasten steel members to substrates.

PART 3 - EXECUTION

3.1 EXAMINATION

A. Examine areas and substrates, with Installer present, and including welded hollow-metal frames, cast-in anchors, and structural framing, for compliance with requirements and other conditions affecting performance.

1. Proceed with installation only after unsatisfactory conditions have been corrected.

3.2 PREPARATION

A. Suspended Assemblies: Coordinate installation of suspension systems with installation of overhead structure to ensure that inserts and other provisions for anchorages to building structure have been installed to receive hangers at spacing required to support the Work and that hangers will develop their full strength.

3.3 INSTALLATION, GENERAL

A. Installation Standard: ASTM C 754, except comply with framing sizes and spacing indicated.
   1. Gypsum Board Assemblies: Also comply with requirements in ASTM C 840 that apply to framing installation.

B. Install supplementary framing, and blocking to support fixtures, equipment services, heavy trim, grab bars, toilet accessories, furnishings, or similar construction.

C. Install bracing at terminations in assemblies.

D. Do not bridge building control and expansion joints with non-load-bearing steel framing members. Frame both sides of joints independently.

3.4 INSTALLING FRAMED ASSEMBLIES

A. Where studs are installed directly against exterior masonry walls or dissimilar metals at exterior walls, install isolation strip between studs and exterior wall.

B. Install studs so flanges within framing system point in same direction.

   1. Space studs as follows:

      a. Single-Layer Application: **16 inches (406 mm)** o.c., unless otherwise indicated.

C. Install tracks (runners) at floors and overhead supports. Extend framing full height to structural supports or substrates above suspended ceilings, except where partitions are indicated to terminate at suspended ceilings. Continue framing around ducts penetrating partitions above ceiling.

   1. Slip-Type Head Joints: Where framing extends to overhead structural supports, install to produce joints at tops of framing systems that prevent axial loading of finished assemblies.
   2. Fire-Resistance-Rated Partitions: Install framing to comply with fire-resistance-rated assembly indicated and support closures and to make partitions continuous from floor to underside of solid structure.

a. Firestop Track: Where indicated, install to maintain continuity of fire-resistance-rated assembly indicated.

D. Direct Furring:

1. Screw to substrate as shown on the drawings.

E. Installation Tolerance: Install each framing member so fastening surfaces vary not more than 1/8 inch (3 mm) from the plane formed by faces of adjacent framing.

END OF SECTION 092216

SECTION 092900 - GYPSUM BOARD

PART 1 - GENERAL

1.1 RELATED DOCUMENTS

A. Drawings and general provisions of the Contract, including General and Supplementary Conditions and Division 01 Specification Sections, apply to this Section.

1.2 SUMMARY

A. This Section includes the following:

1. Interior gypsum board.

B. Related Sections include the following:
1. Division 05 Section "Cold-Formed Metal Framing" for metal stud framing and furring that supports gypsum board.
2. Division 07 Section "Thermal Insulation" for insulation and vapor retarders installed in assemblies that incorporate gypsum board.
3. Division 09 painting Sections for primers applied to gypsum board surfaces.

1.3 SUBMITTALS

A. Product Data: For each type of product indicated.

1.4 STORAGE AND HANDLING

A. Store materials inside under cover and keep them dry and protected against damage from weather, condensation, direct sunlight, construction traffic, and other causes. Stack panels flat to prevent sagging.

1.5 PROJECT CONDITIONS

A. Environmental Limitations: Comply with ASTM C 840 requirements or gypsum board manufacturer's written recommendations, whichever are more stringent.

B. Do not install interior products until installation areas are enclosed and conditioned.

C. Do not install panels that are wet, those that are moisture damaged, and those that are mold damaged.

1. Indications that panels are wet or moisture damaged include, but are not limited to, discoloration, sagging, or irregular shape.
2. Indications that panels are mold damaged include, but are not limited to, fuzzy or splotchy surface contamination and discoloration.

PART 2 - PRODUCTS

2.1 PANELS, GENERAL

A. Size: Provide in maximum lengths and widths available that will minimize joints in each area and that correspond with support system indicated.

2.2 INTERIOR GYPSUM BOARD

A. General: Complying with ASTM C 36/C 36M or ASTM C 1396/C 1396M, as applicable to type of gypsum board indicated and whichever is more stringent.

1. Available Manufacturers: Subject to compliance with requirements, manufacturers offering products that may be incorporated into the Work include, but are not limited to, the following:

a. American Gypsum Co.
b. G-P Gypsum.
c. National Gypsum Company.
d. USG Corporation.

B. Regular Type:

1. Thickness: 5/8 inch.
2. Long Edges: Tapered and featured (rounded or beveled) for prefilling.

C. Type X: Fire Code

1. Thickness: As required by fire-resistance-rated assembly indicated on Drawings.
2. Long Edges: Tapered and featured (rounded or beveled) for prefilling.

2.3 TRIM ACCESSORIES

A. Interior Trim: ASTM C 1047.

1. Material: Galvanized or aluminum-coated steel sheet, rolled zinc, plastic, or paper-faced galvanized steel sheet.
2. Shapes:

a. Cornerbead.
b. L-Bead: L-shaped; exposed long flange receives joint compound.
c. Expansion (control) joint.

2.4 JOINT TREATMENT MATERIALS

A. General: Comply with ASTM C 475/C 475M.

B. Joint Tape:

1. Interior Gypsum Wallboard: Paper.

C. Joint Compound for Interior Gypsum Wallboard: For each coat use formulation that is compatible with other compounds applied on previous or for successive coats.

1. Prefilling: At open joints, rounded or beveled panel edges, and damaged surface areas, use setting-type taping compound.
2. Embedding and First Coat: For embedding tape and first coat on joints, fasteners, and trim flanges, use drying-type, all-purpose compound.

a. Use setting-type compound for installing paper-faced metal trim accessories.

3. Fill Coat: For second coat, use drying-type, all-purpose compound.
4. Finish Coat: For third coat, use setting-type, sandable topping compound.

2.5 AUXILIARY MATERIALS

A. General: Provide auxiliary materials that comply with referenced installation standards and manufacturer's written recommendations.

B. Steel Drill Screws: ASTM C 1002, unless otherwise indicated.

1. Use screws complying with ASTM C 954 for fastening panels to steel members from 0.033 to 0.112 inch thick.

PART 3 - EXECUTION

3.1 EXAMINATION

A. Examine areas and substrates, with Installer present, and including welded hollow-metal frames and framing, for compliance with requirements and other conditions affecting performance.

B. Examine panels before installation. Reject panels that are wet, moisture damaged, and mold damaged.

C. Proceed with installation only after unsatisfactory conditions have been corrected.

3.2 APPLYING AND FINISHING PANELS, GENERAL

A. Comply with ASTM C 840.

B. Install ceiling panels across framing to minimize the number of abutting end joints and to avoid abutting end joints in central area of each ceiling. Stagger abutting end joints of adjacent panels not less than one framing member.

C. Install panels with face side out. Butt panels together for a light contact at edges and ends with not more than 1/16 inch of open space between panels. Do not force into place.

D. Locate edge and end joints over supports, except in ceiling applications where intermediate supports or gypsum board back-blocking is provided behind end joints. Do not place tapered edges against cut edges or ends. Stagger vertical joints on opposite sides of partitions. Do not make joints other than control joints at corners of framed openings.

E. Form control and expansion joints with space between edges of adjoining gypsum panels.

F. Cover both faces of support framing with gypsum panels in concealed spaces (above ceilings, etc.), except in chases braced internally.

1. Unless concealed application is indicated or required for sound, fire, air, or smoke ratings, coverage may be accomplished with scraps of not less than 8 sq. ft. in area.
2. Fit gypsum panels around ducts, pipes, and conduits.
3. Where partitions intersect structural members projecting below underside of floor/roof slabs and decks, cut gypsum panels to fit profile formed by structural members; allow 1/4- to 3/8-inch- wide joints to install sealant.

G. Isolate perimeter of gypsum board applied to non-load-bearing partitions at structural abutments, except floors. Provide 1/4- to 1/2-inch- wide spaces at these locations, and trim edges with edge trim where edges of panels are exposed. Seal joints between edges and abutting structural surfaces with acoustical sealant.

H. Wood Framing: Install gypsum panels over wood framing, with floating internal corner construction. Do not attach gypsum panels across the flat grain of wide-dimension lumber, including floor joists and headers. Float gypsum panels over these members, or provide control joints to counteract wood shrinkage.

3.3 APPLYING INTERIOR GYPSUM BOARD

A. Install interior gypsum board in the following locations:

1. Regular Type: Vertical surfaces, unless otherwise indicated.
2. Type X Fire Resistant Type: at fire barriers and firewalls as shown on the construction drawings.

B. Single-Layer Application:

1. On ceilings, apply gypsum panels before wall/partition board application to greatest extent possible and at right angles to framing, unless otherwise indicated.
2. On partitions/walls, apply gypsum panels vertically (parallel to framing), unless otherwise indicated or required by fire-resistance-rated assembly, and minimize end joints.

   a. Stagger abutting end joints not less than one framing member in alternate courses of panels.
   b. At high walls, install panels horizontally, unless otherwise indicated or required by fire-resistance-rated assembly.
3. Fastening Methods: Apply gypsum panels to supports with steel drill screws.

3.4 INSTALLING TRIM ACCESSORIES

A. General: For trim with back flanges intended for fasteners, attach to framing with same fasteners used for panels. Otherwise, attach trim according to manufacturer's written instructions.

B. Control Joints: Install control joints [at locations indicated on Drawings] [according to ASTM C 840 and in specific locations approved by Architect for visual effect].

C. Interior Trim: Install in the following locations:

1. Cornerbead: Use at outside corners.
2. L-Bead: Use 200B

3.5 FINISHING GYPSUM BOARD

A. General: Treat gypsum board joints, interior angles, edge trim, control joints, penetrations, fastener heads, surface defects, and elsewhere as required to prepare gypsum board surfaces for decoration. Promptly remove residual joint compound from adjacent surfaces.

B. Prefill open joints and damaged surface areas.

C. Apply joint tape over gypsum board joints, except those with trim having flanges not intended for tape.

D. Gypsum Board Finish Levels: Finish panels to levels indicated below and according to ASTM C 840:

1. Level 3: Unless otherwise noted

3.6 PROTECTION

A. Protect installed products from damage from weather, condensation, direct sunlight, construction, and other causes during remainder of the construction period.

B. Remove and replace panels that are wet, moisture damaged, and mold damaged.

1. Indications that panels are wet or moisture damaged include, but are not limited to, discoloration, sagging, or irregular shape.
2. Indications that panels are mold damaged include, but are not limited to, fuzzy or splotchy surface contamination and discoloration.

END OF SECTION 092900

SECTION 095113 ACOUSTICAL PANEL CEILINGS

PART 1 - GENERAL

1.1 RELATED DOCUMENTS

A. Drawings and general provisions of Contract, including General and Supplementary Conditions and Division 1 Specification Sections, apply to this Section.

1.2 SUMMARY

A. This Section includes acoustical panel ceilings installed with exposed suspension systems.

B. Related Sections: The following sections contain requirements that relate to this section:

1. Division 16 Section "Interior Lighting Fixtures" for lighting fixtures in acoustical ceilings.

1.3 SUBMITTALS

A. General: Submit the following in accordance with Conditions of Contract and Division 1 Specification Sections.

1. Product data for each type of product specified.

2. Samples for verification purposes of each type of exposed finish required, prepared on samples of size indicated below and of same thickness and material indicated for final unit of Work. Where finishes involve normal color and texture variations, include sample sets showing full range of variations expected.

a. 6-inch-square samples of each acoustical panel type, pattern, and color.

b. Set of 12-inch-long samples of exposed suspension system members, including moldings, for each color and system type required.

3. Qualification data for firms and persons specified in "Quality Assurance" article to demonstrate their capabilities and experience. Include list of completed projects with project names, addresses, names of Engineers and Owners, and other information specified.

4. Product test reports from qualified independent testing laboratory that are based on its testing of current products for compliance of acoustical ceiling systems and components with requirements.

1.4 QUALITY ASSURANCE

A. Installer Qualifications: Engage an experienced Installer who has successfully completed acoustical ceilings similar in material, design, and extent to those indicated for Project.

B. Single-Source Responsibility for Ceiling Units: Obtain each type of acoustical ceiling unit from a single source with resources to provide products of consistent quality in appearance and physical properties without delaying progress of the Work.

C. Single-Source Responsibility for Suspension System: Obtain each type of suspension system from a single source with resources to provide products of consistent quality in appearance and physical properties without delaying progress of the Work.

D. Coordination of Work: Coordinate layout and installation of acoustical ceiling units and suspension system components with other construction that penetrates ceilings or is supported by them, including light fixtures, HVAC equipment, fire-suppression system components (if any), and operable partition system.

1.5 DELIVERY, STORAGE, AND HANDLING

A. Deliver acoustical ceiling units to project site in original, unopened packages and store them in a fully enclosed space where they will be protected against damage from moisture, direct sunlight, surface contamination, and other causes.

B. Before installing acoustical ceiling units, permit them to reach room temperature and a stabilized moisture content.

C. Handle acoustical ceiling units carefully to avoid chipping edges or damaging units in any way.

1.6 PROJECT CONDITIONS

A. Space Enclosure: Do not install interior acoustical ceilings until space is enclosed and weatherproof, wet-work in space is completed and nominally dry, work above ceilings is complete, and ambient conditions of temperature and humidity will be continuously maintained at values near those indicated for final occupancy.

PART 2 - PRODUCTS

2.1 MANUFACTURERS

A. Available Products: Subject to compliance with requirements, products which may be incorporated in the Work include, but are not limited to, the following:

B. Products: Subject to compliance with requirements, provide one of the following:

1. Mineral Base Panels - Water Felted, with Painted Finish and Perforated and Fissured Pattern, Non-Fire-Resistance Rated:

a. "Minaboard Cortega," Armstrong World Industries, Inc.
b. "Hytone Baroque," Celotex Corp.
c. "Auratone Natural Fissured II," USG Interiors, Inc.

C. Manufacturers: Subject to compliance with requirements, provide products by one of the following:

1. Non-Fire-Resistance-Rated Single-Web Steel Suspension Systems:

a. Chicago Metallic Corporation.
b. Armstrong World Industries, Inc.
c. National Rolling Mills, Inc.
d. USG Interiors, Inc.

2. Edge Moldings:

a. Armstrong World Industries, Inc.
b. Chicago Metallic Corporation.
c. National Rolling Mills, Inc.
d. USG Interiors, Inc.

2.2 ACOUSTICAL CEILING UNITS, GENERAL

A. Standard for Acoustical Ceiling Units: Provide manufacturers' standard units of configuration indicated that comply with ASTM E 1264 classifications as designated by reference to types, patterns, acoustical ratings, and light reflectances, unless otherwise indicated.

1. Mounting Method for Measuring NRC: Type E-400 (plenum mounting in which face of test specimen is 15-3/4 inches [400 mm] away from the test surface) per ASTM E 795.

B. Colors and Patterns: Provide products to match appearance characteristics indicated under each product type.

1. For acoustical ceiling units whose appearance characteristics are indicated by reference to ASTM E 1264 designations for pattern and not by limiting to the naming of one or more products or manufacturers, provide Engineer's selections from each named manufacturer's full range of standard products of type, color, pattern, and light reflectance indicated.

2.3 MINERAL-BASE ACOUSTICAL PANELS - NODULAR, CAST, OR MOLDED APC (APC-1)

A. Type, Form, and Finish: Provide Type III, Form 1 units per ASTM E 1264 with painted finish that comply with pattern and other requirements indicated.

B. Fissured Pattern: Units fitting ASTM E 1264 pattern designation D, with other characteristics as follows:

1. Color/Light Reflectance Coefficient: White/LR 0.75.
2. Noise Reduction Coefficient: NRC 0.65.
3. Ceiling Sound Transmission Class: CSTC 35.
4. Edge Detail: Square.
5. Size: As shown on the drawings.

2.4 VINYL-FACED GYPSUM ACOUSTICAL PANELS FOR ACOUSTICAL CEILING (APC-2)

A. Product: Subject to compliance with requirements, provide on (1) of the following:
1. "Gypsum Lay-In panels, Vinyl Stipple Pattern"; United States Gypsum Co., Item No. 3260.
2. Gridstone- 24" x 24"; Gold Bond Products.
3. Capaul Corporation "Vinylrock" (VG 157) 24" x 24" x 1/2".
4. Gyproc Vinyl-Faced Gypsum Pnaels; Domtar Gypsum (cut 24" x 48").
5. Armstrong "Non-Perforated VS Firrguard" Item No. 868 is acceptable alternative product.

B. Classification: Provide USDA approved panels complying with ASTM E1264 for Type III, Form A, Class 3 with 2 mil vinyl finish.

1. Color: White
2. LR: Not less than .75
3. FAF/CAC Range: 45-50
4. Edge Detail: Square.
5. Thickness: 1/2 inch.
6. Size: 24" x 24" and 24" x 48".
7. Flame Spread: 20 per ASTM C84 tests.

8. Smoke Development: 5 per ASTM E84 tests.

2.5 METAL SUSPENSION SYSTEMS, GENERAL

A. Standard for Metal Suspension Systems: Provide manufacturer's standard metal suspension systems of types, structural classifications, and finishes indicated that comply with applicable ASTM C 635 requirements.

B. Finishes and Colors: Provide manufacturer's standard factory-applied finish for type of system indicated.

1. High-Humidity Finish: Comply with ASTM C 635 requirements for "Coating Classification for Severe Environment Performance" where high-humidity finishes are indicated.

C. Wire for Hangers and Ties: ASTM A 641, Class 1 zinc coating, soft temper.

1. Gage: Provide wire sized so that stress at 3 times hanger design load (ASTM C 635, Table 1, Direct-Hung), will be less than yield stress of wire, but provide not less than 0.106-inch diameter (12 gage).

D. Edge Moldings and Trim: Metal or extruded aluminum of types and profiles indicated or, if not indicated, manufacturer's standard moldings for edges and penetrations that fit type of edge detail and suspension system indicated.

1. For lay-in panels with reveal edge details, provide stepped edge molding that forms reveal of same depth and width as that formed between edge of panel and flange at exposed suspension member.

2. For circular penetrations of ceiling, provide edge moldings fabricated to diameter required to fit penetration exactly.

3. For acoustical tile adhered to substrate, provide edge moldings at ceiling perimeters and where indicated.

2.6 NON-FIRE-RESISTANCE-RATED DIRECT-HUNG SUSPENSION SYSTEMS

A. Wide-Face Single-Web Steel Suspension System: Main and cross-runners roll-formed from prepainted or electrolytic zinc-coated cold-rolled steel sheet, with prepainted 15/16-inch-wide flanges; other characteristics as follows:

1. Structural Classification: Intermediate-Duty System.

2. Finish: Painted, white.

2.7 MISCELLANEOUS MATERIALS

A. Concealed Acoustical Sealant: Nondrying, nonhardening, nonskinning, nonstaining, nonbleeding, gunnable sealant complying with requirement specified in Division 7 Section "Joint Sealers."

PART 3 - EXECUTION

3.1 EXAMINATION

A. Examine substrates and structural framing to which ceiling system attaches or abuts, with Installer present, for compliance with requirements specified in this and other sections that affect installation and anchorage of ceiling system. Do not proceed with installation until unsatisfactory conditions have been corrected.

3.2 PREPARATION

A. Coordination: Furnish layouts for preset inserts, clips, and other ceiling anchors whose installation is specified in other sections.

1. Furnish concrete inserts and similar devices to other trades for installation well in advance of time needed for coordination of other work.

B. Measure each ceiling area and establish layout of acoustical units to balance border widths at opposite edges of each ceiling. Avoid use of less-than-half-width units at borders, and comply with reflected ceiling plans.

3.3 INSTALLATION

A. General: Install acoustical ceiling systems to comply with installation standard referenced below, per manufacturer's instructions and CISCA "Ceiling Systems Handbook."

1. Standard for Installation of Ceiling Suspension Systems: Comply with ASTM C 636.

2. Standards for Installation of Ceiling Suspension Systems: Comply with ASTM C 636 and ASTM E 580.

B. Arrange acoustical units and orient directionally patterned units in a manner shown by reflected ceiling plans.

C. Suspend ceiling hangers from building structural members and as follows:

1. Install hangers plumb and free from contact with insulation or other objects within ceiling plenum that are not part of supporting structural or ceiling suspension system. Splay hangers only where required to miss

obstructions and offset resulting horizontal forces by bracing, countersplaying, or other equally effective means.

2. Where width of ducts and other construction within ceiling plenum produces hanger spacings that interfere with the location of hangers at spacings required to support standard suspension system members, install supplemental suspension members and hangers in form of trapezes or equivalent devices. Size supplemental suspension members and hangers to support ceiling loads within performance limits established by referenced standards.

3. Secure wire hangers by looping and wire-tying, either directly to structures or to inserts, eyescrews, or other devices that are secure and appropriate for substrate, and in a manner that will not cause them to deteriorate or otherwise fail due to age, corrosion, or elevated temperatures.

4. Do not support ceilings directly from permanent metal forms; furnish cast-in-place hanger inserts that extend through forms.

5. Do not attach hangers to steel deck tabs.

6. Do not attach hangers to steel roof deck. Attach hangers to structural members.

7. Space hangers not more than 4'-0" o.c. along each member supported directly from hangers, unless otherwise shown, and provide hangers not more than 8 inches from ends of each member.

D. Install edge moldings of type indicated at perimeter of acoustical ceiling area and where necessary to conceal edges of acoustical units.

1. Sealant Bed: Apply continuous ribbon of acoustical sealant, concealed on back of vertical leg before installing moldings.

2. Screw-attach moldings to substrate at intervals not over 16 inches o.c. and not more than 3 inches from ends, leveling with ceiling suspension system to tolerance of 1/8 inch in 12'-0". Miter corners accurately and connect securely.

E. Install acoustical panels in coordination with suspension system, with edges concealed by support of suspension members. Scribe and cut panels to fit accurately at borders and at penetrations.

1. Install hold-down clips in areas indicated and in areas where required by governing regulations or for fire-resistance ratings; space as recommended by panel manufacturer, unless otherwise indicated or

required.

3.4 CLEANING

A. Clean exposed surfaces of acoustical ceilings, including trim, edge moldings, and suspension members. Comply with manufacturer's instructions for cleaning and touch-up of minor finish damage. Remove and replace work that cannot be successfully cleaned and repaired to permanently eliminate evidence of damage.

END OF SECTION 09511

SECTION 096513 - RESILIENT BASE AND ACCESSORIES

PART 1 - GENERAL

1.1 RELATED DOCUMENTS

A. Drawings and general provisions of the Contract, including General and Supplementary Conditions and Division 01 Specification Sections, apply to this Section.

1.2 SUMMARY

A. Section Includes:

1. Resilient base.
2. Resilient molding accessories.

B. Related Sections:
1. Division 09 Section "Resilient Tile Flooring" for resilient floor tile.

1.3 SUBMITTALS

A. Product Data: For each type of product indicated.

B. Samples for Initial Selection: For each type of product indicated.

1.4 QUALITY ASSURANCE

A. Fire-Test-Response Characteristics: As determined by testing identical products according to ASTM E 648 or NFPA 253 by a qualified testing agency.

1. Critical Radiant Flux Classification: Class I, not less than 0.45 W/sq. cm.

1.5 DELIVERY, STORAGE, AND HANDLING

A. Store resilient products and installation materials in dry spaces protected from the weather, with ambient temperatures maintained within range recommended by manufacturer, but not less than 50 deg F or more than 90 deg F .

1.6 PROJECT CONDITIONS

A. Maintain ambient temperatures within range recommended by manufacturer, but not less than 70 deg F or more than 95 deg F, in spaces to receive resilient products during the following time periods:

1. 48 hours before installation.
2. During installation.
3. 48 hours after installation.

B. Until Substantial Completion, maintain ambient temperatures within range recommended by manufacturer, but not less than 55 deg F or more than 95 deg F.

C. Install resilient products after other finishing operations, including painting, have been completed.

PART 2 - PRODUCTS

2.1 RESILIENT BASE

A. Resilient Base:

1. Manufacturers: Subject to compliance with requirements, available manufacturers offering products that may be incorporated into the Work include, but are not limited to, the following:

a. Armstrong World Industries, Inc.
b. Burke Mercer Flooring Products; Division of Burke Industries, Inc.
c. Flexco, Inc.
d. Johnsonite.
e. Roppe Corporation, USA.

B. Resilient Base Standard: ASTM F 1861.

1. Material Requirement: Type TV (vinyl, thermoplastic).
2. Manufacturing Method: Group I (solid, homogeneous).
3. Style: Cove (base with toe) for resilient flooring and Straight (flat or toeless) for carpeted areas.

C. Minimum Thickness: 0.125 inch.

D. Height: 6 inches.

E. Lengths: Cut lengths 48 inches long or coils in manufacturer's standard length.

F. Outside Corners: Job formed or preformed.

G. Inside Corners: Job formed or preformed.

H. Finish: As selected by Architect from manufacturer's full range.

I. Colors and Patterns: As selected by Architect from full range of industry colors.

2.2 RESILIENT MOLDING ACCESSORY

A. Resilient Molding Accessory:

1. Manufacturers: Subject to compliance with requirements, available manufacturers offering products that may be incorporated into the Work include, but are not limited to, the following:

a. Burke Mercer Flooring Products; Division of Burke Industries, Inc.
b. Flexco, Inc.
c. Johnsonite.
d. Roppe Corporation, USA.

B. Description: Carpet edge for glue-down applications, Nosing for resilient floor covering, Reducer strip for resilient floor covering, Joiner for tile and carpet Transition strips.

C. Material: Vinyl.

D. Colors and Patterns: As selected by Architect from full range of industry colors.

2.3 INSTALLATION MATERIALS

A. Trowelable Leveling and Patching Compounds: Latex-modified, portland cement based or blended hydraulic-cement-based formulation provided or approved by manufacturer for applications indicated.

B. Adhesives: Water-resistant type recommended by manufacturer to suit resilient products and substrate conditions indicated.

C. Stair-Tread-Nose Filler: Two-part epoxy compound recommended by resilient tread manufacturer to fill nosing substrates that do not conform to tread contours.

D. Metal Edge Strips: Extruded aluminum with mill finish of width shown, of height required to protect exposed edges of tiles, and in maximum available lengths to minimize running joints.

E. Floor Polish: Provide protective liquid floor polish products as recommended by resilient stair tread manufacturer.

PART 3 - EXECUTION

3.1 EXAMINATION

A. Examine substrates, with Installer present, for compliance with requirements for maximum moisture content and other conditions affecting performance of the Work.

B. Verify that finishes of substrates comply with tolerances and other requirements specified in other Sections and that substrates are free of cracks, ridges, depressions, scale, and foreign deposits that might interfere with adhesion of resilient products.

C. Proceed with installation only after unsatisfactory conditions have been corrected.

3.2 PREPARATION

A. Prepare substrates according to manufacturer's written instructions to ensure adhesion of resilient products.

B. Concrete Substrates for Resilient Stair Treads and Accessories: Prepare according to ASTM F 710.

1. Verify that substrates are dry and free of curing compounds, sealers, and hardeners.
2. Remove substrate coatings and other substances that are incompatible with adhesives and that contain soap, wax, oil, or silicone, using mechanical methods recommended by manufacturer. Do not use solvents.
3. Alkalinity and Adhesion Testing: Perform tests recommended by manufacturer.
4. Moisture Testing: Perform tests recommended by manufacturer and as follows. Proceed with installation only after substrates pass testing.
   a. Perform relative humidity test using in situ probes, ASTM F 2170. Proceed with installation only after substrates have maximum 75 percent relative humidity level measurement.

C. Fill cracks, holes, and depressions in substrates with trowelable leveling and patching compound and remove bumps and ridges to produce a uniform and smooth substrate. Leveling amounts in the contract are those needed to properly install products listed. There will be no increase to the contract for additional leveling agents.

D. Do not install resilient products until they are same temperature as the space where they are to be installed.

1. Move resilient products and installation materials into spaces where they will be installed at least 48 hours in advance of installation.

E. Sweep and vacuum clean substrates to be covered by resilient products immediately before installation.

3.3 RESILIENT BASE INSTALLATION

A. Comply with manufacturer's written instructions for installing resilient base.

B. Apply resilient base to walls, columns, pilasters, casework and cabinets in toe spaces, and other permanent fixtures in rooms and areas where base is required.

C. Install resilient base in lengths as long as practicable without gaps at seams and with tops of adjacent pieces aligned.

D. Tightly adhere resilient base to substrate throughout length of each piece, with base in continuous contact with horizontal and vertical substrates.

E. Do not stretch resilient base during installation.

F. On masonry surfaces or other similar irregular substrates, fill voids along top edge of resilient base with manufacturer's recommended adhesive filler material.

G. Preformed Corners: Install preformed corners before installing straight pieces.

H. Job-Formed Corners:

1. Outside Corners: Use straight pieces of maximum lengths possible. Form without producing discoloration (whitening) at bends.
2. Inside Corners: Use straight pieces of maximum lengths possible.

3.4 RESILIENT ACCESSORY INSTALLATION

A. Comply with manufacturer's written instructions for installing resilient accessories.

B. Resilient Molding Accessories: Butt to adjacent materials and tightly adhere to substrates throughout length of each piece. Install reducer strips at edges of carpet and resilient floor covering that would otherwise be exposed.

3.5 CLEANING AND PROTECTION

A. Comply with manufacturer's written instructions for cleaning and protection of resilient products.

B. Perform the following operations immediately after completing resilient product installation:

1. Remove adhesive and other blemishes from exposed surfaces.
2. Sweep and vacuum surfaces thoroughly.
3. Damp-mop surfaces to remove marks and soil.

C. Protect resilient products from mars, marks, indentations, and other damage from construction operations and placement of equipment and fixtures during remainder of construction period.

D. Floor Polish: Remove soil, visible adhesive, and surface blemishes from resilient stair treads before applying liquid floor polish.

1. Apply two coat(s).

E. Cover resilient products until Substantial Completion.

END OF SECTION 09651

SECTION 096520 - RESILIENT TILE FLOORING

PART 1 - GENERAL

1.1 RELATED DOCUMENTS

A. Drawings and general provisions of the Contract, including General and Supplementary Conditions and Division 01 Specification Sections, apply to this Section.

1.2 SUMMARY

A. Section Includes:

1. Vinyl composition floor tile.

B. Related Sections:

1. Division 09 Section "Resilient Base and Accessories" for resilient base, reducer strips, and other accessories installed with resilient floor coverings.

1.3 SUBMITTALS

A. Product Data: For each type of product indicated.

B. Shop Drawings: For each type of floor tile. Include floor tile layouts, edges, columns, doorways, enclosing partitions, built-in furniture, cabinets, and cutouts.

1. Show details of special patterns.

C. Samples for Initial Selection: For each type of floor tile indicated.

D. Maintenance Data: For each type of floor tile to include in maintenance manuals.

1.4 QUALITY ASSURANCE

A. Fire-Test-Response Characteristics: As determined by testing identical products according to ASTM E 648 or NFPA 253 by a qualified testing agency.

1. Critical Radiant Flux Classification: Class I, not less than 0.45 W/sq. cm.

1.5 DELIVERY, STORAGE, AND HANDLING

A. Store floor tile and installation materials in dry spaces protected from the weather, with ambient temperatures maintained within range recommended by manufacturer, but not less than 50 deg F or more than 90 deg F . Store floor tiles on flat surfaces.

1.6 PROJECT CONDITIONS

A. Maintain ambient temperatures within range recommended by manufacturer, but not less than 70 deg F or more than 95 deg F, in spaces to receive floor tile during the following time periods:

1. 48 hours before installation.
2. During installation.
3. 48 hours after installation.

B. Until Substantial Completion, maintain ambient temperatures within range recommended by manufacturer, but not less than 55 deg F or more than 95 deg F.

C. Close spaces to traffic during floor tile installation.

D. Close spaces to traffic for 48 hours after floor tile installation.

E. Install floor tile after other finishing operations, including painting, have been completed.

1.7 EXTRA MATERIALS

A. Furnish extra materials that match products installed and that are packaged with protective covering for storage and identified with labels describing contents.

1. Floor Tile: Furnish 1 box for every 50 boxes or fraction thereof, of each type, color, and pattern of floor tile installed.

PART 2 - PRODUCTS

2.1 VINYL COMPOSITION FLOOR TILE

A. Products: Subject to compliance with requirements,:

1. Armstrong World Industries, Inc.; Imperial Texture Standard Excelon
2. Congoleum Corporation ; Alternatives

B. Tile Standard: ASTM F 1066, Class 2, through-pattern tile.

C. Wearing Surface: Smooth.

D. Thickness: 0.125 inch.

E. Size: 12 by 12 inches .

F. Colors and Patterns: As selected by Architect from full range of industry colors and patterns.

2.2 INSTALLATION MATERIALS

A. Trowelable Leveling and Patching Compounds: Latex-modified, portland cement based or blended hydraulic-cement-based formulation provided or approved by manufacturer for applications indicated.

B. Adhesives: Water-resistant type recommended by manufacturer to suit floor tile and substrate conditions indicated.

C. Floor Polish: Provide protective liquid floor polish products as recommended by manufacturer.

PART 3 - EXECUTION

3.1 EXAMINATION

A. Examine substrates, with Installer present, for compliance with requirements for maximum moisture content and other conditions affecting performance of the Work.

B. Verify that finishes of substrates comply with tolerances and other requirements specified in other Sections and that substrates are free of cracks, ridges, depressions, scale, and foreign deposits that might interfere with adhesion of floor tile.

C. Proceed with installation only after unsatisfactory conditions have been corrected.

3.2 PREPARATION

A. Prepare substrates according to manufacturer's written instructions to ensure adhesion of resilient products.

B. Concrete Substrates: Prepare according to ASTM F 710.

1. Verify that substrates are dry and free of curing compounds, sealers, and hardeners.

2. Remove substrate coatings and other substances that are incompatible with adhesives and that contain soap, wax, oil, or silicone, using mechanical methods recommended by manufacturer. Do not use solvents.
3. Alkalinity and Adhesion Testing: Perform tests recommended by manufacturer. Proceed with installation only after substrates pass testing.
4. Moisture Testing: Perform tests recommended by manufacturer and as follows. Proceed with installation only after substrates pass testing.
   a. Perform relative humidity test using in situ probes, ASTM F 2170. Proceed with installation only after substrates have a maximum 75% relative humidity level measurement.

C. Access Flooring Panels: Remove protective film of oil or other coating using method recommended by access flooring manufacturer.

D. Fill cracks, holes, and depressions in substrates with trowelable leveling and patching compound and remove bumps and ridges to produce a uniform and smooth substrate. Leveling amounts in the contract are those needed to properly install products listed. **There will be no increase to the Contract for additional leveling agents and related labor.**

E. Do not install floor tiles until they are same temperature as space where they are to be installed.

   1. Move resilient products and installation materials into spaces where they will be installed at least 48 hours in advance of installation.

F. Sweep and vacuum clean substrates to be covered by resilient products immediately before installation.

3.3 FLOOR TILE INSTALLATION

A. Comply with manufacturer's written instructions for installing floor tile.

B. Lay out floor tiles from center marks established with principal walls, discounting minor offsets, so tiles at opposite edges of room are of equal width. Adjust as necessary to avoid using cut widths that equal less than one-half tile at perimeter.

   1. Lay tiles square with room axis in pattern indicated.

C. Match floor tiles for color and pattern by selecting tiles from cartons in the same sequence as manufactured and packaged, if so numbered. Discard broken, cracked, chipped, or deformed tiles.

   1. Lay tiles with grain direction alternating in adjacent tiles (basket-weave pattern).

D. Scribe, cut, and fit floor tiles to butt neatly and tightly to vertical surfaces and permanent fixtures including built-in furniture, cabinets, pipes, outlets, and door frames.

E. Extend floor tiles into toe spaces, door reveals, closets, and similar openings. Extend floor tiles to center of door openings.

F. Maintain reference markers, holes, and openings that are in place or marked for future cutting by repeating on floor tiles as marked on substrates. Use chalk or other nonpermanent, nonstaining marking device.

G. Install floor tiles on covers for telephone and electrical ducts, building expansion-joint covers, and similar items in finished floor areas. Maintain overall continuity of color and pattern between pieces of tile installed on covers and adjoining tiles. Tightly adhere tile edges to substrates that abut covers and to cover perimeters.

H. Adhere floor tiles to flooring substrates using a full spread of adhesive applied to substrate to produce a completed installation without open cracks, voids, raising and puckering at joints, telegraphing of adhesive spreader marks, and other surface imperfections.

3.4 CLEANING AND PROTECTION

A. Comply with manufacturer's written instructions for cleaning and protection of floor tile.

B. Perform the following operations immediately after completing floor tile installation:

1. Remove adhesive and other blemishes from exposed surfaces.
2. Sweep and vacuum surfaces thoroughly.
3. Damp-mop surfaces to remove marks and soil.

C. Protect floor tile products from mars, marks, indentations, and other damage from construction operations and placement of equipment and fixtures during remainder of construction period.

D. Floor Polish: Remove soil, visible adhesive, and surface blemishes from floor tile surfaces before applying liquid floor polish.

1. Apply two coat(s).

E. Cover floor tile until Substantial Completion.

END OF SECTION 096520

THIS PAGE LEFT INTENTIONALLY BLANK

SECTION 098433 - SOUND-ABSORBING WALL PANELS

PART 1 - GENERAL

1.1 RELATED DOCUMENTS

A. Drawings and general provisions of the Contract, including General and Supplementary Conditions and Division 01 Specification Sections, apply to this Section.

1.2 SUMMARY

A. Section includes shop-fabricated, fabric-wrapped panel units tested for acoustical performance, including:

1. Corrugated/perforated metal sound-absorbing and -diffusing and wall panels.

1.3 DEFINITIONS

A. NRC: Noise Reduction Coefficient.

B. SAA: Sound Absorption Average.

1.4 ACTION SUBMITTALS

A. Product Data: For each type of fabric backing, insulation, panel edge, metal face material, and mounting indicated.

B. Shop Drawings: For sound-absorbing wall units. Include mounting devices and details; details at panel head, base, joints, and corners; and details at ceiling, floor base, and wall intersections. Indicate panel edge and core materials.

1. Include elevations showing panel sizes, direction of corrugations, perforation pattern matching and mounting details.

C. Samples for Verification: For the following products, prepared on Samples of size indicated below:

1. Fabric: Sample, but not smaller than required to show complete pattern repeat, from dye lot to be used for the Work, and with specified treatments applied. Mark top and face of fabric.

2. Panel Edge: 12-inch- (300-mm-) long Sample(s) showing each edge profile, corner, and finish.
3. Core Material: 12-inch- (300-mm-) square Sample at corner.
4. Mounting Devices: Full-size Samples.
5. Aluminum panel finish: Submit color chart depicting actual color material of manufacturer's coatings for selection.

D. Product Certificates: For each type of sound-absorbing wall unit, from manufacturer.

1.5 QUALITY ASSURANCE

A. Source Limitations: Obtain sound-absorbing wall units from single source from single manufacturer.

B. Fire-Test-Response Characteristics: Provide sound-absorbing wall units meeting the following as determined by testing identical products by UL or another testing and inspecting agency acceptable to authorities having jurisdiction:

1. Surface-Burning Characteristics: As determined by testing per ASTM E 84.

a. Flame-Spread Index: 25 or less.
b. Smoke-Developed Index: 450 or less.

2. Fire Growth Contribution: Meeting acceptance criteria of local code and authorities having jurisdiction when tested according to NFPA 265.

1.6 DELIVERY, STORAGE, AND HANDLING

A. Comply with fabric and sound-absorbing wall unit manufacturers' written instructions for minimum and maximum temperature and humidity requirements for shipment, storage, and handling.

B. Deliver materials and units in unopened bundles and store in a temperature-controlled dry place with adequate air circulation.

1.7 PROJECT CONDITIONS

A. Environmental Limitations: Do not install sound-absorbing wall units until spaces are enclosed and weathertight, wet work in spaces is complete and dry, work at and above ceilings is complete, and ambient temperature and humidity conditions are maintained at the levels indicated for Project when occupied for its intended use.

B. Lighting: Do not install sound-absorbing wall units until a lighting level of not less than 50 fc (538 lux) is provided on surfaces to receive the units.

C. Field Measurements: Verify locations of sound-absorbing wall units and actual dimensions of openings and penetrations by field measurements before fabrication.

PART 2 - PRODUCTS

2.1 MANUFACTURER

A. Basis of Design: Products of several manufacturers may be considered acceptable, subject to submittal review by and approval of the Architect. Basis of design for this specification shall be "AlphaPerf" Metal Wall Panels by Acoustical Solutions, 2420 Grenoble Road., Richmond, VA 23294, (P) 800-782-5742.

2.2 SOUND-ABSORBING WALL UNITS

A. Sound-Absorbing and Diffusing Wall Panel: Manufacturer's standard panel construction consisting of curvilinear-corrugated and perforated aluminum sheet panel applied to concealed metal wall Z-clips or hat channels over a black matte fiber cloth and 1-inch thick mineral fiberboard.
   1. Panel Shape: Radially curved flat panel with 1/4-inch round, staggered perforations over approximately 30 percent of the panel surface.
   2. Mounting: Discrete surface screws, secured to substrate metal furring. Furring anchored horizontally to substrate CMU with expansion screws.
   3. Core: Fire-retardant-treated medium-density mineral fiberboard, prepared for required acoustical performance.
   4. Facing Material: Provide a matte-black fire-retardant fiberglass cloth sheet directly adhered to the back of the metal panel over the entire surface. This sheet shall conceal appearance of sound-absorptive insulation through metal panel perforations.
   5. Acoustical Performance: Sound absorption NRC or SAA of 0.15 to 0.25 according to ASTM C 423 for Type A mounting according to ASTM E 795.
   6. Panel Width: Unitized sections overlapped as necessary at edges to form a continuous surface over width indicated on Drawings.
   7. Panel Height: 5'-4" high.

2.3 MATERIALS

A. Aluminum Sheet: 0.032-inch thickness minimum, stucco-embossed aluminum sheet, 3003-H14 alloy, minimum.

B. Aluminum Edge Trim, Extrusions: Aluminum Extrusion shall be 6063-T6 alloys. (ASTM B 221, ASTM B 221 M).

C. Aluminum Finish(es): Aluminum shall receive a factory applied and baked finish of a 70% Kynar® or Hylar 5000® (Fluropon® or Fluropon Classic® II) paint. Color to be selected from manufacturer's standard color range to be submitted to the Architect.

D. Core Materials:
1. Mineral-Fiber Board: Maximum flame-spread and smoke-developed indexes of 25 and 10, respectively; minimum density of 13 lb/cu. ft. (208 kg/cu. m), and with perforated surface.
2. Medium-Density Fiberboard: Panels complying with ANSI A208.2, Grade M-2.

a. Made with binder containing no urea formaldehyde.
b. Panels shall comply with the testing and product requirements of the California Department of Health Services' "Standard Practice for the Testing of Volatile Organic Emissions from Various Sources Using Small-Scale Environmental Chambers."
c. Fire-retardant panels made from softwood fibers, synthetic resins, and fire-retardant chemicals mixed together at time of panel manufacture to achieve flame-spread index of 25 or less and smoke-developed index of 200 or less per ASTM E 84.

E. Backing Material: Fabric from same dye lot; of single color and pattern.
1. Color: Black.
2. Fiber Content: 100 percent nonwoven polyester or polyolefin.
3. Width: 64 inches (1676 mm) or as needed to extend across entire back surface of panels.
4. Applied Treatments: Fire-retardant-treated.

F. Mounting Devices: For surface mounting to structural wall, provide continuous Z Clips or hat channels in extruded aluminum or 18 gauges Galvanized steel, finished to match the exposed wall panel.

2.4 FABRICATION

A. General: Use manufacturer's standard construction except as otherwise indicated; with facing material applied to face, edges, and back border of dimensionally stable core; and with rigid edges to reinforce panel perimeter against warpage and damage.

B. Backing Material: Apply fabric facing fully covering backside surfaces of unit; with material stretched straight, on the grain, tight, square, and free from puckers, ripples, wrinkles, sags, blisters, seams, adhesive, or other visible distortions or foreign matter.

C. Dimensional Tolerances of Finished Units: Plus or minus 1/16 inch (1.6 mm) for the following:

1. Thickness when measured from face of substrate wall.
2. Edge straightness.
3. Overall length and width.
4. Squareness from corner to corner.

PART 3 - EXECUTION

3.1 EXAMINATION

A. Examine units, substrates, areas, and conditions, for compliance with requirements, installation tolerances, and other conditions affecting performance of sound-absorbing wall units.

B. Proceed with installation only after unsatisfactory conditions have been corrected.

3.2 INSTALLATION

A. Align panel corrugations vertically and plumb. Install sound-absorbing wall units in locations indicated with vertical surfaces and edges plumb, top edges level and in alignment with other units, faces flush, and scribed to fit adjoining work accurately at borders and at penetrations.

B. Comply with sound-absorbing wall unit manufacturer's written instructions for installation of units using type of mounting devices indicated. Mount units securely to supporting substrate.

C. Align and level fabric pattern and joints at corrugations among adjacent units.

3.3 INSTALLATION TOLERANCES

A. Variation from Plumb and Level: Plus or minus 1/16 inch (1.6 mm).

B. Variation of Panel Joints from Hairline: Not more than 1/16 inch (1.6 mm) wide.

3.4 CLEANING

A. Clip loose threads; remove pills and extraneous materials.

B. Clean panels on completion of installation to remove dust and other foreign materials according to manufacturer's written instructions.

END OF SECTION 098433

THIS PAGE LEFT INTENTIONALLY BLANK

SECTION 099123 - INTERIOR PAINTING

PART 1 - GENERAL

1.1 RELATED DOCUMENTS

A. Drawings and general provisions of the Contract, including General and Supplementary Conditions and Division 01 Specification Sections, apply to this Section.

1.2 SUMMARY

A. This Section includes surface preparation and the application of paint systems on the following interior substrates:

1. Concrete masonry units (CMU or Block).
2. Steel.
3. Galvanized Metal.
4. Gypsum board.

B. Related Sections include the following:

1. Division 05 Sections for shop priming of metal substrates with primers specified in this Section.
2. Division 06 Sections for shop priming and finishing carpentry specified in this Section.

1.3 SUBMITTALS

A. Product Data: For each type of product indicated.

B. Samples for Initial Selection: For each type of topcoat product indicated.

C. Product List: For each product indicated, include the following:

1. Cross-reference to paint system and locations of application areas. Use same designations indicated on Drawings and in schedules.
2. Printout of current "MPI Approved Products List" for each product category specified in Part 2, with the proposed product highlighted.

1.4 QUALITY ASSURANCE

A. MPI Standards:

1. Products: Complying with MPI standards indicated and listed in "MPI Approved Products List."
2. Preparation and Workmanship: Comply with requirements in "MPI Architectural Painting Specification Manual" for products and paint systems indicated.

1.5 DELIVERY, STORAGE, AND HANDLING

A. Store materials not in use in tightly covered containers in well-ventilated areas with ambient temperatures continuously maintained at not less than 45 deg F .

1. Maintain containers in clean condition, free of foreign materials and residue.
2. Remove rags and waste from storage areas daily.

1.6 PROJECT CONDITIONS

A. Apply paints only when temperature of surfaces to be painted and ambient air temperatures are between 50 and 95 deg F .

B. Do not apply paints when relative humidity exceeds 85 percent; at temperatures less than 5 deg F above the dew point; or to damp or wet surfaces.

1.7 EXTRA MATERIALS

A. Furnish extra materials described below that are from same production run (batch mix) as materials applied and that are packaged for storage and identified with labels describing contents.

1. Quantity: Furnish an additional 5 percent, but not less than 1 gal. of each material and color applied.

PART 2 - PRODUCTS

2.1 MANUFACTURERS

A. Available Manufacturers: Subject to compliance with requirements, manufacturers offering products that may be incorporated into the Work include, but are not limited to, the following:

1. Benjamin Moore & Co.
2. Bennette Paint Mfg. Co., Inc.
3. Duron, Inc.
4. ICI Paints.

5. PPG Architectural Finishes, Inc.
6. Sherwin-Williams Company (The).

2.2 PAINT, GENERAL

A. Material Compatibility:

1. Provide materials for use within each paint system that are compatible with one another and substrates indicated, under conditions of service and application as demonstrated by manufacturer, based on testing and field experience.
2. For each coat in a paint system, provide products recommended in writing by manufacturers of topcoat for use in paint system and on substrate indicated.

B. Colors: As selected by Architect from manufacturer's full range <Insert requirements>.

2.3 BLOCK FILLERS

A. Interior/Exterior Latex Block Filler: MPI #4.

2.4 PRIMERS/SEALERS

A. Interior Latex Primer/Sealer: MPI #50.

2.5 METAL PRIMERS

A. Quick-Drying Alkyd Metal Primer: MPI #76.

B. Cementitious Galvanized-Metal Primer: MPI #26.

2.6 WOOD PRIMERS

A. Interior Latex-Based Wood Primer: MPI #39.

2.7 ALKYD PAINTS

A. Interior Alkyd (Flat): MPI #49 (Gloss Level 1).

B. Interior Alkyd (Semigloss): MPI #47 (Gloss Level 5).

PART 3 - EXECUTION

3.1 EXAMINATION

A. Examine substrates and conditions, with Applicator present, for compliance with requirements for maximum moisture content and other conditions affecting performance of work.

B. Maximum Moisture Content of Substrates: When measured with an electronic moisture meter as follows:

1. Concrete: 12 percent.
2. Masonry (Clay and CMU): 12 percent.
3. Wood: 15 percent.
4. Gypsum Board: 12 percent.
5. Plaster: 12 percent.

C. Verify suitability of substrates, including surface conditions and compatibility with existing finishes and primers.

D. Begin coating application only after unsatisfactory conditions have been corrected and surfaces are dry.

1. Beginning coating application constitutes Contractor's acceptance of substrates and conditions.

3.2 PREPARATION

A. Comply with manufacturer's written instructions and recommendations in "MPI Architectural Painting Specification Manual" applicable to substrates indicated.

B. Remove plates, machined surfaces, and similar items already in place that are not to be painted. If removal is impractical or impossible because of size or weight of item, provide surface-applied protection before surface preparation and painting.

1. After completing painting operations, use workers skilled in the trades involved to reinstall items that were removed. Remove surface-applied protection if any.
2. Do not paint over labels of independent testing agencies or equipment name, identification, performance rating, or nomenclature plates.

C. Clean substrates of substances that could impair bond of paints, including dirt, oil, grease, and incompatible paints and encapsulants.

1. Remove incompatible primers and reprime substrate with compatible primers as required to produce paint systems indicated.

D. Concrete Masonry Substrates: Remove efflorescence and chalk. Do not paint surfaces if moisture content or alkalinity of surfaces to be painted exceeds that permitted in manufacturer's written instructions.

E. Steel Substrates: Remove rust and loose mill scale. Clean using methods recommended in writing by paint manufacturer.

F. Gypsum Board Substrates: Do not begin paint application until finishing compound is dry and sanded smooth.

3.3 APPLICATION

A. Apply paints according to manufacturer's written instructions.

1. Use applicators and techniques suited for paint and substrate indicated.
2. Paint surfaces behind movable equipment and furniture same as similar exposed surfaces. Before final installation, paint surfaces behind permanently fixed equipment or furniture with prime coat only.
3. Paint front and backsides of access panels, removable or hinged covers, and similar hinged items to match exposed surfaces.

B. Tint each undercoat a lighter shade to facilitate identification of each coat if multiple coats of same material are to be applied. Tint undercoats to match color of topcoat, but provide sufficient difference in shade of undercoats to distinguish each separate coat.

C. If undercoats or other conditions show through topcoat, apply additional coats until cured film has a uniform paint finish, color, and appearance.

D. Apply paints to produce surface films without cloudiness, spotting, holidays, laps, brush marks, roller tracking, runs, sags, ropiness, or other surface imperfections. Cut in sharp lines and color breaks.

3.4 FIELD QUALITY CONTROL

A. Testing of Paint Materials: Owner reserves the right to invoke the following procedure at any time and as often as Owner deems necessary during the period when paints are being applied:

1. Owner will engage the services of a qualified testing agency to sample paint materials being used. Samples of material delivered to Project site will be taken, identified, sealed, and certified in presence of Contractor.

2. Testing agency will perform tests for compliance with product requirements.
3. Owner may direct Contractor to stop applying paints if test results show materials being used do not comply with product requirements. Contractor shall remove noncomplying-paint materials from Project site, pay for testing, and repaint surfaces painted with rejected materials. Contractor will be required to remove rejected materials from previously painted surfaces if, on repainting with complying materials, the two paints are incompatible.

3.5 CLEANING AND PROTECTION

A. At end of each workday, remove rubbish, empty cans, rags, and other discarded materials from Project site.

B. After completing paint application, clean spattered surfaces. Remove spattered paints by washing, scraping, or other methods. Do not scratch or damage adjacent finished surfaces.

C. Protect work of other trades against damage from paint application. Correct damage to work of other trades by cleaning, repairing, replacing, and refinishing, as approved by Architect, and leave in an undamaged condition.

D. At completion of construction activities of other trades, touch up and restore damaged or defaced painted surfaces.

3.6 INTERIOR PAINTING SCHEDULE

A. CMU Substrates:

1. Alkyd Over Latex Sealer System: MPI INT 4.2N.

a. Prime Coat: Interior/exterior latex block filler (unless previously painted).
b. Sealer Coat: Interior latex primer/sealer.
c. Intermediate Coat: Interior alkyd matching topcoat.
d. Topcoat: Interior alkyd (semigloss).

B. Steel Substrates:

1. Alkyd System: MPI INT 5.1E.

a. Prime Coat: Alkyd anticorrosive metal primer (unless materials is supplied with a factory applied primer).
b. Intermediate Coat: Interior alkyd matching topcoat.
c. Topcoat: Interior alkyd (semigloss).

C. Galvanized-Metal Substrates:

1. Alkyd System: MPI INT 5.3C.

    a. Prime Coat: Cementitious galvanized-metal primer.
    b. Intermediate Coat: Interior alkyd matching topcoat.
    c. Topcoat: Interior alkyd (flat).

D. Gypsum Board Substrates:

1. Alkyd Over Latex Primer System: MPI INT 9.2C.

    a. Prime Coat: Interior latex primer/sealer.
    b. Intermediate Coat: Interior alkyd matching topcoat.
    c. Topcoat: Interior alkyd (semigloss).

END OF SECTION 099123

THIS PAGE LEFT INTENTIONALLY BLANK

SECTION 099600 - HIGH-PERFORMANCE COATINGS

PART 1 - GENERAL

1.1 RELATED DOCUMENTS

A. Drawings and general provisions of the Contract, including General and Supplementary Conditions and Division 01 Specification Sections, apply to this Section.

1.2 SUMMARY

A. This Section includes surface preparation and application of high-performance coating systems on the following substrates:

1. Interior Substrates:

a. Concrete masonry units (CMU/Block).

B. Related Sections include the following:

1. Division 05 Sections for shop priming of metal substrates with primers specified in this Section.
2. Division 09 painting Sections for special-use coatings and general field painting.

1.3 SUBMITTALS

A. Product Data: For each type of product indicated.

B. Samples for Initial Selection: For each type of finish-coat product indicated.

C. Product List: For each product indicated. Cross-reference products to coating system and locations of application areas. Use same designations indicated on Drawings and in schedules.

1.4 QUALITY ASSURANCE

A. Master Painters Institute (MPI) Standards:

1. Products: Complying with MPI standards indicated and listed in "MPI Approved Products List."

2. Preparation and Workmanship: Comply with requirements in "MPI Architectural Painting Specification Manual" for products and coating systems indicated.

1.5 DELIVERY, STORAGE, AND HANDLING

A. Store materials not in use in tightly covered containers in well-ventilated areas with ambient temperatures continuously maintained at not less than 45 deg F .

1. Maintain containers in clean condition, free of foreign materials and residue.
2. Remove rags and waste from storage areas daily.

1.6 PROJECT CONDITIONS

A. Apply coatings only when temperature of surfaces to be coated and surrounding air temperatures are between 50 and 95 deg F .

B. Do not apply coatings in snow, rain, fog, or mist; when relative humidity exceeds 85 percent; at temperatures less than 5 deg F above the dew point; or to damp or wet surfaces.

PART 2 - PRODUCTS

2.1 HIGH-PERFORMANCE COATINGS, GENERAL

A. Material Compatibility:

1. Provide materials for use within each coating system that are compatible with one another and substrates indicated, under conditions of service and application as demonstrated by manufacturer, based on testing and field experience.
2. Provide products of same manufacturer for each coat in a coating system.

B. Colors: As selected by Architect from manufacturer's full range.

2.2 BLOCK FILLERS

A. Interior/Exterior Latex Block Filler: MPI#4.

1. Available Products: Subject to compliance with requirements, products that may be incorporated into the Work include, but are not limited to, the following:

a. Benjamin Moore & Co.; Moorcraft, Super Craft Latex Block Filler, 285-01.

b. PPG Architectural Finishes, Inc.; Speedhide, Int/Ext Block Filler, 6-15.
c. Sherwin-Williams Company (The); PrepRite, Int/Ext Block Filler, B25W25.

B. Epoxy Block Filler: MPI #116.

1. Available Products: Subject to compliance with requirements, products that may be incorporated into the Work include, but are not limited to, the following:

a. PPG Architectural Finishes, Inc.; Aquapon, Epoxy Block Filler, 97-685.
b. Sherwin-Williams Company (The); Industrial & Marine, Kem Cati-Coat HS Epoxy Filler/Sealer, B24W400/V400 S.

2.3 EPOXY COATINGS

A. Epoxy, Cold-Cured, Semi-Gloss:

1. Available Products: Subject to compliance with requirements, products that may be incorporated into the Work include, but are not limited to, the following:

a. Benjamin Moore & Co.; Polyamide Epoxy Coating, M36/M37.
b. PPG Architectural Finishes, Inc.; Aquapon, Epoxy Cold Cured Gloss, 95-1.

PART 3 - EXECUTION

3.1 EXAMINATION

A. Examine substrates and conditions, with Applicator present, for compliance with requirements for maximum moisture content and other conditions affecting performance of work.

1. Maximum Moisture Content of Substrates: When measured with an electronic moisture meter as follows:

a. Masonry (Clay and CMU): 12 percent.

2. Verify compatibility with and suitability of substrates, including compatibility with existing finishes or primers.
3. Begin coating application only after unsatisfactory conditions have been corrected and surfaces are dry.
4. Coating application indicates acceptance of surfaces and conditions.

3.2 PREPARATION

A. Comply with manufacturer's written instructions and recommendations in "MPI Architectural Painting Specification Manual" applicable to substrates indicated.

B. Remove plates, machined surfaces, and similar items already in place that are not to be coated. If removal is impractical or impossible because of size or weight of item, provide surface-applied protection before surface preparation and coating.

1. After completing coating operations, reinstall items that were removed; use workers skilled in the trades involved.

C. Clean substrates of substances that could impair bond of coatings, including dirt, oil, grease, and incompatible paints and encapsulants.

1. Remove incompatible primers and reprime substrate with compatible primers as required to produce coating systems indicated.

D. CMU Substrates: Remove efflorescence and chalk. Do not coat surfaces if moisture content or alkalinity of surfaces to be coated exceeds that permitted in manufacturer's written instructions.

3.3 APPLICATION

A. Apply high-performance coatings according to manufacturer's written instructions.

1. Use applicators and techniques suited for coating and substrate indicated.
2. Coat surfaces behind movable equipment and furniture same as similar exposed surfaces. Before final installation, coat surfaces behind permanently fixed equipment or furniture with prime coat only.
3. Coat back sides of access panels, removable or hinged covers, and similar hinged items to match exposed surfaces.

B. Tint each undercoat a lighter shade to facilitate identification of each coat if multiple coats of the same material are to be applied. Tint undercoats to match color of finish coat, but provide sufficient difference in shade of undercoats to distinguish each separate coat.

C. If undercoats or other conditions show through final coat, apply additional coats until cured film has a uniform coating finish, color, and appearance.

D. Apply coatings to produce surface films without cloudiness, spotting, holidays, laps, brush marks, runs, sags, ropiness, or other surface imperfections. Produce sharp glass lines and color breaks.

3.4 CLEANING AND PROTECTION

A. At end of each workday, remove rubbish, empty cans, rags, and other discarded materials from Project site.

B. After completing coating application, clean spattered surfaces. Remove spattered coatings by washing, scraping, or other methods. Do not scratch or damage adjacent finished surfaces.

C. Protect work of other trades against damage from coating operation. Correct damage by cleaning, repairing, replacing, and recoating, as approved by Architect, and leave in an undamaged condition.

D. At completion of construction activities of other trades, touch up and restore damaged or defaced coated surfaces.

3.5 INTERIOR HIGH-PERFORMANCE COATING SCHEDULE

A. CMU Substrates:

1. Epoxy Coating System:

a. Prime Coat: Interior/exterior latex block filler, MPI #4.
b. Intermediate Coat: Epoxy, cold-cured, gloss, MPI #77.
c. Topcoat: Epoxy, cold-cured, gloss, MPI #77.

END OF SECTION 099600

THIS PAGE LEFT INTENTIONALLY BLANK

SECTION 110162 – MAINTENANCE OF STAGE CURTAINS

PART 1 - GENERAL

1.1 RELATED DOCUMENTS

A. Drawings and general provisions of the Contract, including General and Supplementary Conditions and other Division 1 Specification Sections, apply to this Section.

1.2 SUMMARY

A. This section includes procedural requirements for the careful removal, restoration, cleaning and reinstallation of existing stage curtains. Stage curtains include the primary bi-part/operating stage curtain, overhead teaser, side panel, and backdrop curtains. If, upon closer inspection or following the removal of the curtains, it is determined that additional refurbishment or more extensive component replacement is necessary, additional requirements will be issued by Change order.

1.3 QUALIFICATIONS

A. All work under this section shall be performed by a professional company regularly engaged in the restoration and cleaning of stage curtains and operating systems. The following company has been identified as qualified to perform this work:

LuXout Stage Curtains
1221 Admiral Street
Richmond, VA 23220
Telephone: (800) 817-1204

PART 2 - PRODUCTS (Not Applicable)

PART 3 - EXECUTION

3.1 EXAMINATION

A. Thoroughly examine existing stage curtains, support system and operating hardware to validate conditions cited in the assessment report. Examine curtains closely after de-rigging for tears, missing hooks or other defects not readily observed while curtains are mounted.

3.2 PREPARATION

A. Coordinate materials and their de-rigging, restoration and cleaning, and installation in accordance with the recommendations of the condition assessment report. Schedule and perform the work so as to protect and store the stage curtains and related components from adjacent HVAC system, lighting, interior painting and ceiling replacement work at the Stage and Cafetorium. Reinstall stage curtains after all work in adjacent areas is completed.

3.3 BASIS OF BID

A. Work shall include, at minimum, the following:

1. Pretreat all stains for removal. All curtain fabrics shall be thoroughly dry-cleaned.

2. The main bi-parting stage and teaser curtains are made from a fabric known as "Doral." It is an Inherently Flame Retardant (IFR) boucle product and may be cleaned without need for re-treatment for flame-retardancy.

3. All side panel and backdrop (cyclorama) curtains are made from a cotton Oxford Rep fabric. After cleaning, these shall receive treatment for flame-retardancy in a full immersion bath. Provide a five-year guarantee in writing for efficacy of treatment.

4. Tumble dry all curtains to remove all surface lint and to restore fabric nap.

5. Minor tears, missing hooks and frays shall be repaired and/or replaced as necessary. Include a reasonable allowance for this work based on the condition assessment report.

6. Include all take-down of curtains, de-rigging of track and hardware as needed to perform restoration. Include re-erection of all curtains, track and hardware, to include replacement of missing or work components. Note that existing teaser curtain is tacked in place to the exsiting proscenium opening header wall, and must be re-tacked in place after cleaning.

7. All tracks, mounting hardware, ropes and accessories shall be thoroughly inspected, cleaned, lubricated and tested for smooth operation.

END OF SECTION 110162

SECTION 114120 - FOOD SERVICE REFRIGERATION EQUIPMENT

PART 1 - GENERAL

1.1 RELATED DOCUMENTS

A. Drawings and general provisions of the Contract, including General and Supplementary Conditions and Division 01 Specification Sections, apply to this Section.

1.2 SUMMARY

A. Section Includes:

1. Fabricated equipment for rooftop and cooler/freezer interior.
2. Utility distribution systems.

B. Related Sections:

1. Section 230100, "Mechanical General Provisions," and other Division 23 sections for additional requirements related to installation of refrigeration equipment and related apputenances.
2. Section 260100 "Electrical General Provisions" and other Division 26 sections for connection of electrified refrigeration system.

1.3 ACTION SUBMITTALS

A. Product Data: For each type of product indicated. Include the following:

1. Manufacturer's model number.
2. Accessories and components that will be included for Project.
3. Clearance requirements for access and maintenance.
4. Utility service connections for water, drainage, power, and fuel; include roughing-in dimensions.

B. Shop Drawings: For fabricated equipment. Include plans, elevations, sections, roughing-in dimensions, fabrication details, utility service requirements, and attachments to other work.

1.4 INFORMATIONAL SUBMITTALS

A. Coordination Drawings: For refrigeration equipment.

1. Indicate locations of refrigeration equipment and connections to utilities.
2. Include plans and elevations; clearance requirements for equipment access and maintenance; details of equipment supports; and utility service characteristics.

B. Warranty: Samples of special warranty.

1.5 CLOSEOUT SUBMITTALS

A. Operation and Maintenance Data: For foodservice equipment to include in emergency, operation, and maintenance manuals. In addition to items specified in Section 017823 "Operation and Maintenance Data," include the following:

1. Product Schedule: For each foodservice equipment item, include the following:

a. Designation indicated on Drawings.
b. Manufacturer's name and model number.
c. List of factory-authorized service agencies including addresses and telephone numbers.

1.6 QUALITY ASSURANCE

A. UL Certification: Provide electric and fuel-burning equipment and components that are evaluated by UL for fire, electric shock, and casualty hazards according to applicable safety standards, and that are UL certified for compliance and labeled for intended use.

B. Regulatory Requirements: Install equipment to comply with the following:

1. ASHRAE 15, "Safety Code for Mechanical Refrigeration."

C. Preinstallation Conference: Conduct conference at Project site. Verify existing conditions, layout proposed route for refrigerant and power connections, and coordinate access to interstitial space above cooler ceiling.

1.7 PROJECT CONDITIONS

A. Field Measurements: Verify actual dimensions of construction contiguous with refrigeration equipment by field measurements before fabrication. Indicate measurements on Coordination Drawings.

1.8 COORDINATION

A. Coordinate refrigeration system equipment layout and installation with existing cooler boxes and other work, including layout and installation of lighting fixtures, HVAC equipment, and fire-suppression system components.

B. Coordinate locations and requirements of utility service connections.

C. Coordinate sizes, locations, and requirements of the following:

1. Overhead equipment supports.
2. Equipment bases.
3. Roof curbs, equipment supports, and penetrations.

1.9 WARRANTY

A. Refrigeration Compressor Warranty: Manufacturer's standard form in which manufacturer agrees to repair or replace compressors that fail in materials or workmanship within specified warranty period.

1. Failure includes, but is not limited to, inability to maintain set temperature.
2. Warranty Period: **Five** years from date of Substantial Completion.

PART 2 - PRODUCTS

2.1 WALK-IN REFRIGERATION EQUIPMENT

A. General: Existing walk-in cooler, consisting of a refrigerated section and a freezer section, shall remain in place. A shop drawing of the existing cooler is appended to this Section for reference. The refrigeration system, consisting of rooftop condensing units, interior compressor/evaporator units, refrigerant and refrigerant lines, valves, controls and all related accessories

B. Design: Provide refrigeration condensing units of size and capacities as indicated, consisting of compressors, condensers, receivers, motors, mounting bases, vibration isolators, refrigeration components, safety devices, electrical controls, refrigerant and protective controls; all factory assembled and tested.

C. Refrigeration Specialties: Provide refrigerant dryer, liquid line solenoid valve, suction line filter, expansion valve, and water regulating valve (for water cooled condensers only). Provide pump down control circuits consisting of thermostat and solenoid valve. Maintain box temperature from thermostat and liquid line solenoid valve, control compressor from suction pressure.

D. Leak Testing: After all lines are connected, the entire system shall be leak tested. The complete system shall be pressurized to 150 psig with refrigerant and dry nitro-

gen (or dry CO_2). An electronic type leak detector shall be used to identify leaks. Pressure shall be held for a minimum of 12 hours and then rechecked. Coordinate test observation with the owner's representative on site.

E. Evacuation: A good, deep vacuum pump shall be connected to both the low and high side evacuation valves with copper tube or high vacuum hoses (1/4" ID minimum). If the compressor has service valves, they shall remain closed. A deep vacuum gauge capable of registering pressure in microns shall be attached to the system for pressure readings. A shut off valve between the gauge connection and vacuum pump shall be provided to allow the system pressure to be checked after evacuation. Do not turn off vacuum pump when connected to an evacuated system before closing shut off valve. The vacuum pump shall be operated until pressure of 1,500 microns absolute pressure is reached – at which time the vacuum shall be broken with the refrigerant to be used in the system through a drier until the system pressure rises above 0 psig. Repeat this operation a second time. Open the compressor service valves and evacuate the entire system to 500 microns absolute pressure. Raise the pressure to 2 psig with the refrigerant and remove the vacuum pump.

F. Refrigeration Line Insulation: Refrigeration lines shall be insulated with Aeroflex USA Aerocel White/Gray 25/50 pipe insulation. Thickness of insulation shall be in accordance with insulation manufacturer's recommendation. Butt joints and seams shall be sealed with contact adhesive.

2.2 ITEMIZED SPECIFICATIONS

A. General: Catalogue cut sheets for specified equipment are appended to this section that contain additional requirements with which to comply.

B. Refrigeration package for existing walk in Cooler shall be Heatcraft Model BHT005X6B (208-230/1), R404A/R507; preassembled remote condensing unit to include: suction filter, liquid line drier and sight glass, suction accumulator, and variable speed EC motors with Orbus controller, to include LAK and housing. Unit shall be standard with Microchannel coil design. Extended warranty to be included.

C. Cooler Unit Cooler shall be Heatcraft Model ADT065AK (115/1) evaporator to include: EC motor, TXV and Liquid Line Suction valve, and thermostat. Units to be installed in accordance to manufacturers specifications.

D. Refrigeration package for existing walk in Freezer shall be Heatcraft Model BHT025L6C (208-230/3), R404A/R507; preassembled remote condensing unit to include: suction filter, liquid line drier and sight glass, suction accumulator, and variable speed EC motors with Orbus controller, to include LAK and housing. Unit standard with Microchannel coil design. Extended warranty to be included.

E. Unit Cooler shall be Heatcraft Model LET090BK (208-230/1) evaporator to include: EC motors, TXV and Liquid Line Suction valve, and thermostat. Units to be installed in accordance to manufacturers specifications.

F. All refrigeration line sets shall be provided by installing contractor to be properly sized and installed. Installation shall be in accordance with all codes and regulations and include any permits required. Upon completion, units shall be operating and holding temperature at -10 degrees F. All roof mounting materials shall be provided by installing contractor.

PART 3 - EXECUTION

3.1 INSTALLATION

A. Install refrigeration system equipment level and plumb, according to manufacturer's written instructions.

1. Connect equipment to utilities.
2. To greatest practical extent, reuse existing utility penetrations at coolers. Seal unused penetrations with foamed-in insulation encapsulated with sheet metal closures sealed and secured to existing cooler wall panels.
3. Provide cutouts in equipment, neatly formed, where required to run service lines through equipment to make final connections.

B. Complete equipment assembly where field assembly is required.

1. Provide closed butt and contact joints that do not require a filler.
2. Grind field welds on stainless-steel equipment until smooth and polish to match adjacent finish.

C. Install equipment with access and maintenance clearances that comply with manufacturer's written installation instructions and with requirements of authorities having jurisdiction.

D. Install closure-trim strips and similar items requiring fasteners in a bed of sealant.

E. Install joint sealant in joints between equipment and abutting surfaces with continuous joint backing unless otherwise indicated. Produce airtight, watertight, vermin-proof, sanitary joints.

3.2 CLEANING AND PROTECTING

A. After completing installation of equipment, repair damaged finishes.

B. Clean and adjust equipment as required to produce ready-for-use condition.

C. Protect equipment from damage during remainder of the construction period.

3.3 DEMONSTRATION

A. Train Owner's maintenance personnel to adjust, operate, and maintain refrigeration system equipment.

END OF SECTION 114120

COMBINATION COOLER/FREEZER

7'-5 1/2" HIGH

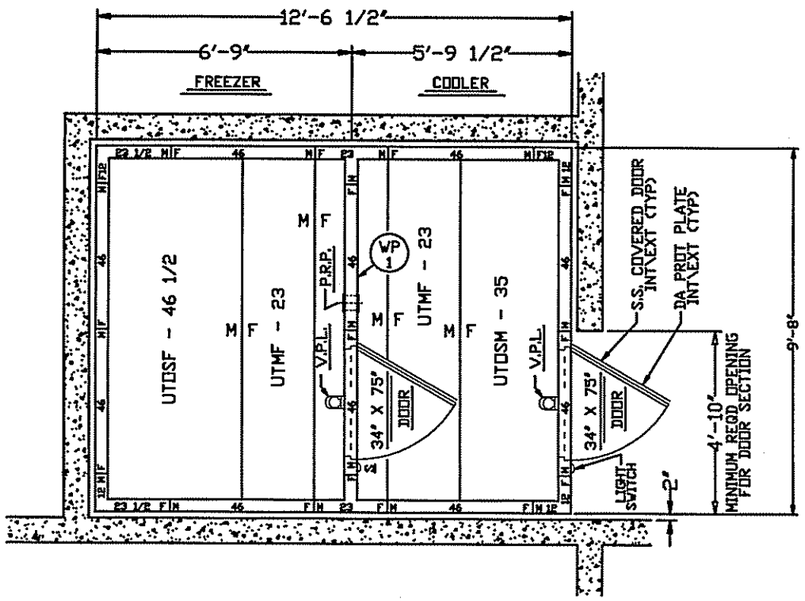

WALL AND TOP PANEL LAYOUT

NOTE: COOLER & FREEZER DOOR SECTIONS W/ 22 GA. STAIN. STEEL INT/EXT

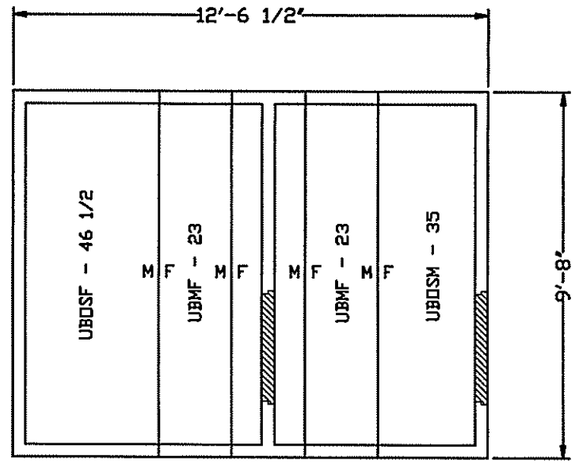

FLOOR PANEL LAYOUT

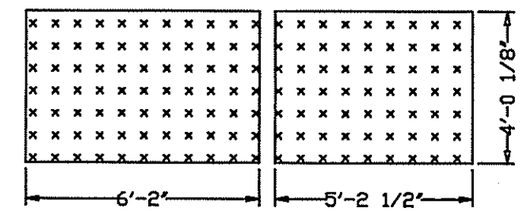

FLOOR TREADPLATE LAYOUT

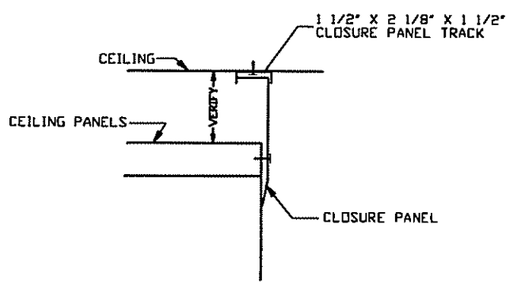

CLOSURE PANEL DETAIL

W/10° ANGLE AT BOTTOM

NOTE: CLOSURE PANELS & WALL FILLERS CANNOT BE MANUFACTURED UNTIL SIZES AND CEILING HEIGHT (A.F.F.) ARE RECEIVED

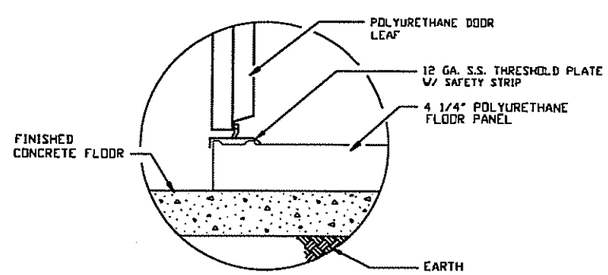

SECTION VIEW THROUGH COOLER DOOR

SHOWING FINISHED FLOOR APPLICATION

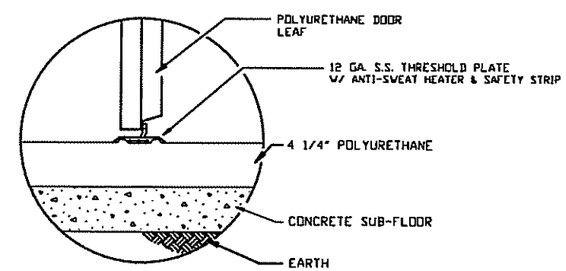

SECTION THROUGH INTERIOR PARTITION WALL

ORDER NO. 75763

M/F: GRAFTON BETHEL ELEMENTARY SCHOOL

ATTENTION DO NOT SCALE!!	NOTE: PLEASE BEGIN INSTALLATION OF WALK-IN COOLER/FREEZER AT ANY CORNER. INSTALL CORNER WITH ARROW POINTING UP. (MALE SIDE ON RIGHT.)	ATLANTIC EQUIPMENT NORFOLK, VA ATLANTIC EQUIPMENT NORFOLK, VA	DWG. BY K.R.W. CKD. BY: SCALE: 1/4"=1'0"	BROWN SALISBURY, N.C. SINCE 1910 W. A. BROWN & SON INC. WALK-IN REFRIGERATORS	DATE: 7-12-95 DWG. NO. A 1569

THIS PAGE LEFT INTENTIONALLY BLANK

A Brand of Heatcraft Refrigeration Products 2175 West Park Place Boulevard Stone Mountain, GA 30087 800.537.7775 www.thecoldstandard.com	BHT005X6B **Hermetic** **Air-cooled**

Project:		QUOTATION:	**20140204095106;0 Item No: 1**
Location: ,		Submitted by:	**Mark Wilbers**
Customer:		DATE:	2/4/2014
Identity #:		☒ For Record	By:_____
Tag:		☐ For Approval	Date: _____

PHYSICAL & ELECTRICAL DATA

REFRIGERANT	COMPRESSOR		CONNECTIONS (inches)		RECEIVER CAPACITY (90%)	NET WEIGHT	SOUND DATA	ALTITUDE	AMBIENT TEMP
	Model No.	HP	Liquid	Suction					
R404A/R507	RST45C1E	0.5	3/8	1/ 2	5.5	162	68	0	CAPACITY (BTUH) at 95°F Ambient

POWER SUPPLY	COMPRESSOR		FAN MOTOR			MCA†		MOP‡		Evap. Fan	Defrost Heater
Volts / Ph / Hz	RLA	LRA	QTY	HP	FLA	Air	Elec.	Air	Elec.	Amps	Amps
208-230/1/60	4.6	26.5	1	1/15	0.5	15	20	15	20	8	15

†MCA=Minimum Circuit Ampacity
‡MOP = Maximum Overcurrent Protection

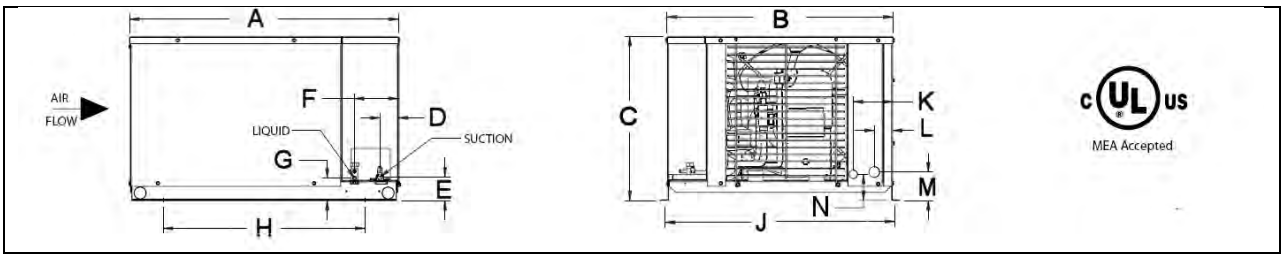

DIMENSIONS (inches)								
A	B	C	D	E	F	G	H	J
28 1/4	23 3/ 4	17 1/ 4	1 3/ 4	2 9/16	4 9/16	2 3/ 8	21 1/ 8	24 1/ 4

DIMENSIONS (inches)						
K	L	M	N	P	R	S
4 1/16	1 7/ 8	3	2 3/ 4	11 5/8		

A Brand of Heatcraft Refrigeration Products 2175 West Park Place Boulevard Stone Mountain, GA 30087 800.537.7775 www.thecoldstandard.com	BHT005X6B **Hermetic** **Air-cooled**

Project:		QUOTATION:	**20140204095106;0 Item No: 1**
Location: ,		Submitted by:	**Mark Wilbers**
Customer:		DATE:	2/4/2014
Identity #:	☒ For Record	By:_____	
Tag:	☐ For Approval	Date: _____	

CAPACITY (BTUH)						
40 °F SST	35°F SST	30 °F SST	25 °F SST	20 °F SST	15 °F SST	10°F SST
8510	7790	6530	5970	5440	4960	4480

CAPACITY (BTUH)						
5 °F SST	0 °F SST	-5 °F SST	-10 °F SST	-15 °F SST	-20 °F SST	-25 °F SST
3990	3510	3090	2660	2260	1850	1430

CAPACITY (BTUH)						
-30 °F SST	-35 °F SST	-40 °F SST				
0	0	0				

SST = Saturated Suction Temperature

STANDARD FEATURES

Cabinet & Construction
- Painted steel cabinets
- Heavy duty steel raised base with 1-1/2" legs
- Suction service valves for hermetic and scroll compressors located outside the cabinet
- Semi-hermetic compressor models have a suction valve on the compressor and an access fitting on the suction line entering the cabinet
- Receiver with fusible plug, liquid shutoff valve and charging port
- Large electrical panel
- Prefabricated wiring harnesses
- Piping is pre-bent to eliminate leaks

Coil:
- Microchannel coil technology (not including 1-1/2 through 3 HP semi-hermetic models but including 29M2 models)
- Completely leak tested in a helium environment
- Liquid Drier/Sight Glass on 005-025/027-060 L6, ZF Scroll

Compressor
- Hermetic, semi-hermetic and scroll. R-22 and R-404A/507 available for both medium and low temperature applications
- Spring-mounted compressors with vibration eliminators on all 1-1/2 to 6 HP semi-hermetic compressors; 1/2 to 1 HP compressors are rigid mounted and have a discharge loop
- Discharge service valves
- Bump tested and allowed to cycle off on the high and low pressure control
- Encapsulated, auto-reset, high and low pressure controls (adjustable low pressure control on low temperature models)

Fan Motors:
- Rated for 50 and 60 cycle application
- Standard PSC or optional Variable Speed EC (VSEC) with Orbus™ Controller
- Fan guards and wiring conduit on indoor models
- Specifically matched fans with motor and coil

OPTIONS

A Brand of Heatcraft Refrigeration Products 2175 West Park Place Boulevard Stone Mountain, GA 30087 800.537.7775 www.thecoldstandard.com	BHT005X6B **Hermetic** **Air-cooled**

Project:		QUOTATION:	**20140204095106;0 Item No: 1**
Location: ,		Submitted by:	**Mark Wilbers**
Customer:		DATE:	2/4/2014
Identity #:		☒ For Record	By:_____
Tag:		☐ For Approval	Date: _____

Mounted Options:

None	

Ship Loose Options:

None	

MINIMUM UNIT CLEARANCES

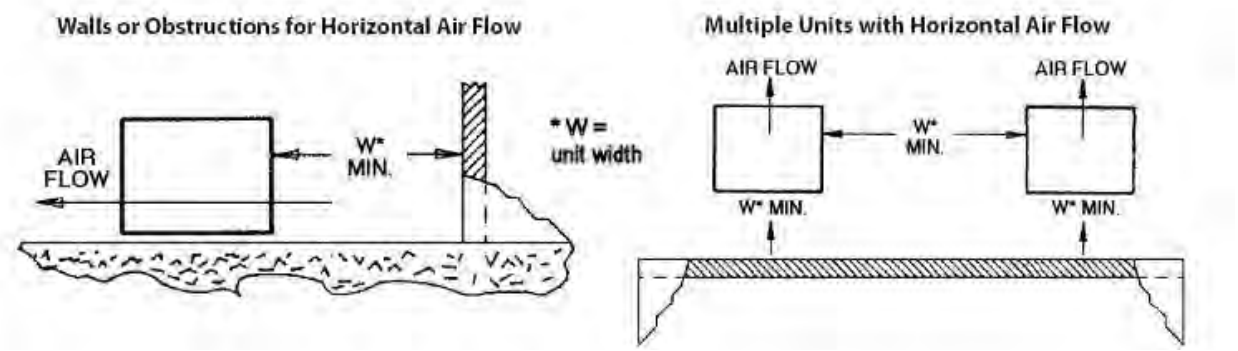

A Brand of Heatcraft Refrigeration Products 2175 West Park Place Boulevard Stone Mountain, GA 30087 800.537.7775 www.thecoldstandard.com	ADT065AK **Low Profile** **Walk-in**

Project:		QUOTATION:	**20140204095106;0 Item No: 1**
Location: ,		Submitted by:	**Mark Wilbers**
Customer:		DATE:	2/4/2014
Identity #:		☒ For Record	By:_____
Tag:		☐ For Approval	Date: _____

PHYSICAL & ELECTRICAL DATA

DEFROST TYPE	AIR FLOW	VOLTAGE	CAPACITY	RATING TD	RATING SST	Approx. NET WEIGHT	ALTITUDE
Air	650	115/1/60	6500	10	23	34	0

FANS				HEATERS		CONNECTIONS (inches)		
QTY	FLA	MOTOR TYPE	BLADE	AMPS	WATTS	INLET	OUTLET	DRAIN
1	1	PSC	12.0			1/2	7/8	3/4

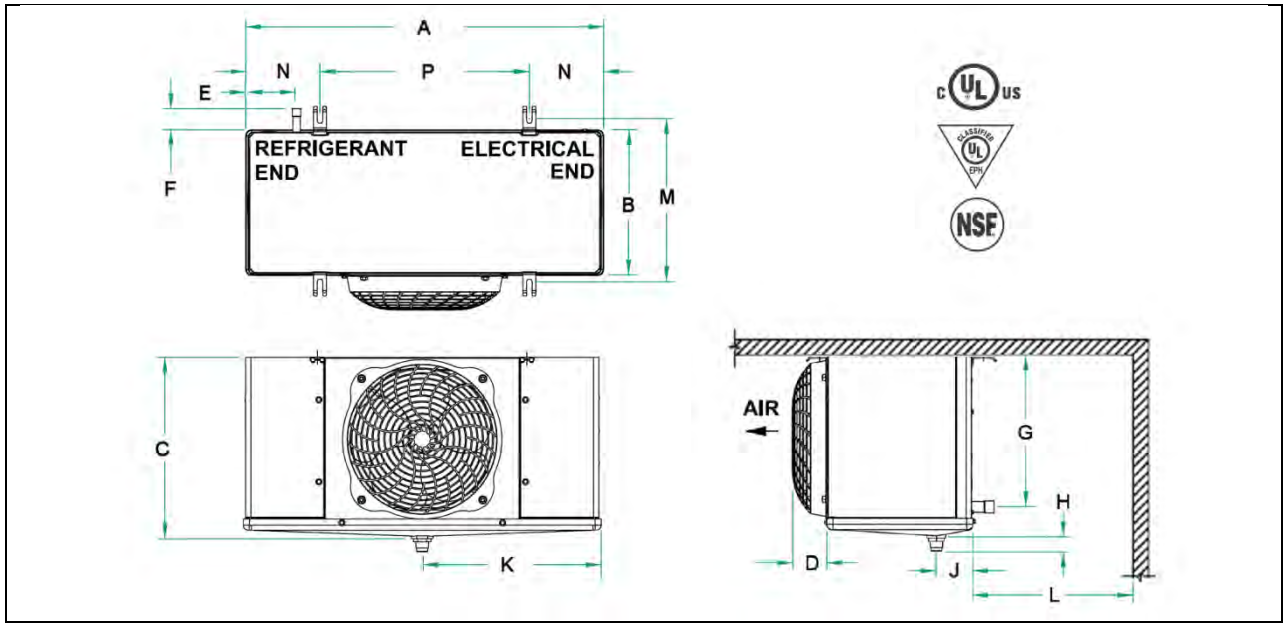

DIMENSIONS (inches)											
A	B	C	D	E	F	G	H	J	K	L	M
29.50	12.00	14.94	2.88	4.19	1.75	12.38	1.06	3.00	14.75	18.00	13.44

DIMENSIONS (inches)								
N	P	R	S	T	U	V	X	Y
6.13	17.25	0.00	0.00	0.00	0.00	0.00	0.00	0.00

A Brand of Heatcraft Refrigeration Products 2175 West Park Place Boulevard Stone Mountain, GA 30087 800.537.7775 www.thecoldstandard.com	ADT065AK **Low Profile** **Walk-in**

Project:		QUOTATION:	**20140204095106;0 Item No: 1**
Location: ,		Submitted by:	**Mark Wilbers**
Customer:		DATE:	2/4/2014
Identity #:		☒ For Record	By:_____
Tag:		☐ For Approval	Date: _____

STANDARD FEATURES

Cabinet

- Aluminum textured panels
- Front Access to electrical and refrigeration components
- Small, low profile physical cabinet size with optimized interior space
- The electrical board is front facing for easy access
- Internal panels are isolated for quiet operation
- Liquid line solenoid wire harness factory installed for quick installation
- Pre-drilled holes on the back of the unit for room thermostat and controls

Drain Pan:

- Drain fitting is located to the back of the unit with larger diameter

Coil:

- Internally enhanced copper tubing and aluminum fin design for higher efficiency
- Schrader valve on suction header
- Sweat connections to reduce potential for leaks

Fan Guards and Motors:

- Improved plastic, round guard design
- Motor harness and solenoid harness are at the bottom of the unit for easy access
- Motor harness easily plugs in
- EC motors available factory-installed or as a drop-in replacement through InterLink™ Commercial Refrigeration

OPTIONS

Mounted Options:

None	

Ship Loose Options (by Unit):

None	

Ship Loose Options (by System):

None	

MINIMUM UNIT CLEARANCES

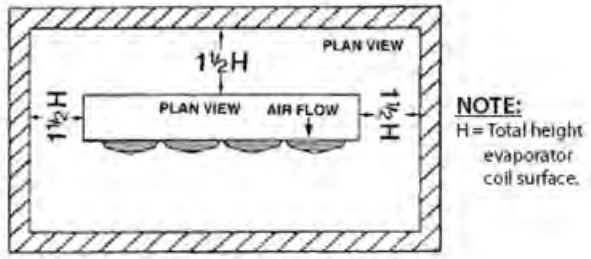

One evaporator

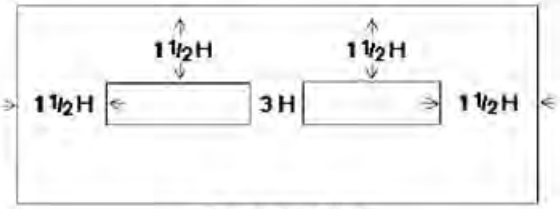

Two evaporators

A Brand of Heatcraft Refrigeration Products 2175 West Park Place Boulevard Stone Mountain, GA 30087 800.537.7775 www.thecoldstandard.com	BHT025L6C **Hermetic** **Air-cooled**

Project:		QUOTATION:	**20140204100012;0 Item No: 1**
Location: ,		Submitted by:	**Mark Wilbers**
Customer:		DATE:	2/4/2014
Identity #:		☒ For Record	By:_____
Tag:		☐ For Approval	Date: _____

PHYSICAL & ELECTRICAL DATA

REFRIGERANT	COMPRESSOR		CONNECTIONS (inches)		RECEIVER CAPACITY (90%)	NET WEIGHT	SOUND DATA	ALTITUDE	AMBIENT TEMP
	Model No.	HP	Liquid	Suction					
R404A/R507	CF09K6E	2	3/8	7/8	9	210	76	0	CAPACITY (BTUH) at 95°F Ambient

POWER SUPPLY	COMPRESSOR		FAN MOTOR			MCA†		MOP‡		Evap. Fan	Defrost Heater
Volts / Ph / Hz	RLA	LRA	QTY	HP	FLA	Air	Elec.	Air	Elec.	Amps	Amps
208-230/3/60	9.2	72.2	2	1/15	1	15	21	20	25	7	15

†MCA=Minimum Circuit Ampacity
‡MOP = Maximum Overcurrent Protection

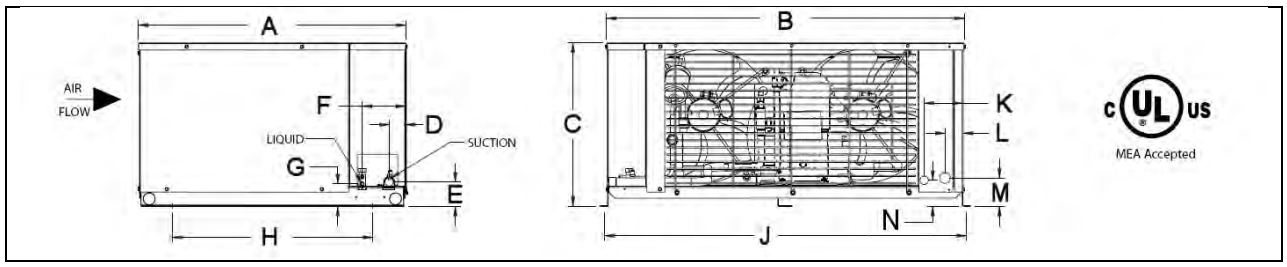

DIMENSIONS (inches)								
A	B	C	D	E	F	G	H	J
28 1/4	37 3/ 4	17 1/ 4	1 3/ 4	2 9/16	4 9/16	2 3/ 8	21 1/ 8	38 1/ 4

DIMENSIONS (inches)						
K	L	M	N	P	R	S
4 1/16	1 7/ 8	3	2 3/ 4	11 5/8		

A Brand of Heatcraft Refrigeration Products 2175 West Park Place Boulevard Stone Mountain, GA 30087 800.537.7775 www.thecoldstandard.com	BHT025L6C **Hermetic** **Air-cooled**

Project:		QUOTATION:	**20140204100012;0 Item No: 1**
Location: ,		Submitted by:	**Mark Wilbers**
Customer:		DATE:	2/4/2014
Identity #:	☒ For Record	By:_____	
Tag:	☐ For Approval	Date: _____	

CAPACITY (BTUH)						
40 °F SST	35°F SST	30 °F SST	25 °F SST	20 °F SST	15 °F SST	10°F SST
0	0	0	0	0	0	0

CAPACITY (BTUH)						
5 °F SST	0 °F SST	-5 °F SST	-10 °F SST	-15 °F SST	-20 °F SST	-25 °F SST
0	15400	13700	12000	10150	8300	6950

CAPACITY (BTUH)						
-30 °F SST	-35 °F SST	-40 °F SST				
5750	0	0				

SST = Saturated Suction Temperature

STANDARD FEATURES

Cabinet & Construction
- Painted steel cabinets
- Heavy duty steel raised base with 1-1/2" legs
- Suction service valves for hermetic and scroll compressors located outside the cabinet
- Semi-hermetic compressor models have a suction valve on the compressor and an access fitting on the suction line entering the cabinet
- Receiver with fusible plug, liquid shutoff valve and charging port
- Large electrical panel
- Prefabricated wiring harnesses
- Piping is pre-bent to eliminate leaks

Coil:
- Microchannel coil technology (not including 1-1/2 through 3 HP semi-hermetic models but including 29M2 models)
- Completely leak tested in a helium environment
- Liquid Drier/Sight Glass on 005-025/027-060 L6, ZF Scroll

Compressor
- Hermetic, semi-hermetic and scroll. R-22 and R-404A/507 available for both medium and low temperature applications
- Spring-mounted compressors with vibration eliminators on all 1-1/2 to 6 HP semi-hermetic compressors; 1/2 to 1 HP compressors are rigid mounted and have a discharge loop
- Discharge service valves
- Bump tested and allowed to cycle off on the high and low pressure control
- Encapsulated, auto-reset, high and low pressure controls (adjustable low pressure control on low temperature models)

Fan Motors:
- Rated for 50 and 60 cycle application
- Standard PSC or optional Variable Speed EC (VSEC) with Orbus™ Controller
- Fan guards and wiring conduit on indoor models
- Specifically matched fans with motor and coil

OPTIONS

A Brand of Heatcraft Refrigeration Products 2175 West Park Place Boulevard Stone Mountain, GA 30087 800.537.7775 www.thecoldstandard.com	BHT025L6C **Hermetic** **Air-cooled**

Project:		QUOTATION:	**20140204100012;0 Item No: 1**
Location: ,		Submitted by:	**Mark Wilbers**
Customer:		DATE:	2/4/2014
Identity #:		☒ For Record	By:_____
Tag:		☐ For Approval	Date: _____

Mounted Options:

None	

Ship Loose Options:

None	

MINIMUM UNIT CLEARANCES

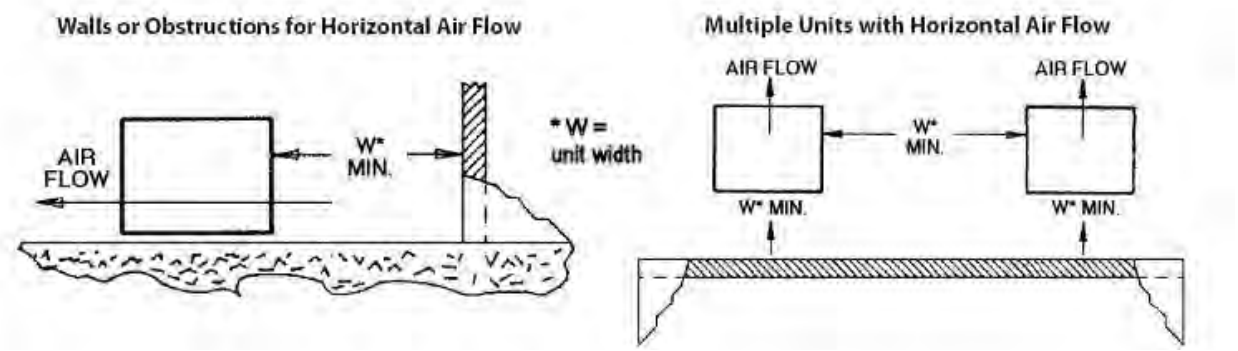

A Brand of Heatcraft Refrigeration Products 2175 West Park Place Boulevard Stone Mountain, GA 30087 800.537.7775 www.thecoldstandard.com	LET090BK **Low Profile** **Walk-in**

Project:		QUOTATION:	**20140204100012;0 Item No: 1**
Location: ,		Submitted by:	**Mark Wilbers**
Customer:		DATE:	2/4/2014
Identity #:		☒ For Record	By:_____
Tag:		☐ For Approval	Date: _____

PHYSICAL & ELECTRICAL DATA

DEFROST TYPE	AIR FLOW	VOLTAGE	CAPACITY	RATING TD	RATING SST	Approx. NET WEIGHT	ALTITUDE
Electric	1300	208-230/1/60	8820	10	-22	48	0

FANS				HEATERS		CONNECTIONS (inches)		
QTY	FLA	MOTOR TYPE	BLADE	AMPS	WATTS	INLET	OUTLET	DRAIN
2	1	PSC	12.0	7.8	1800	1/2	7/8	3/4

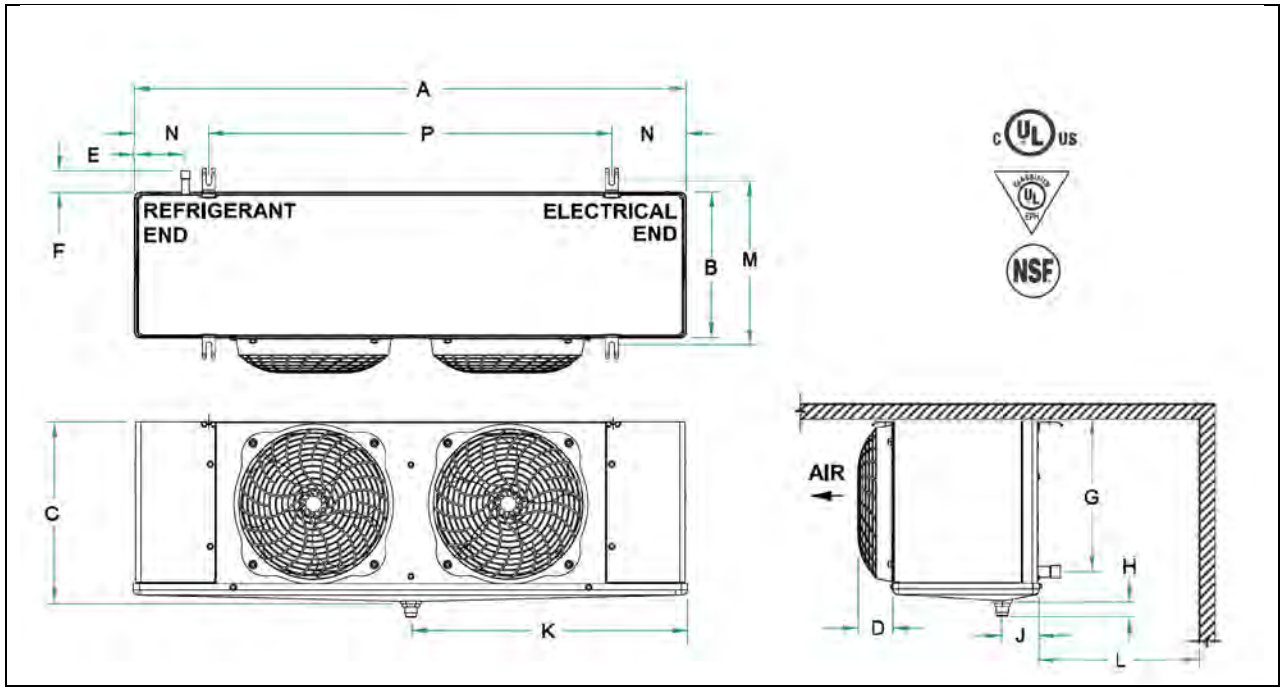

DIMENSIONS (inches)											
A	B	C	D	E	F	G	H	J	K	L	M
45.50	12.00	14.94	2.88	4.19	1.75	12.38	1.06	3.00	22.75	18.00	13.44

DIMENSIONS (inches)								
N	P	R	S	T	U	V	X	Y

A Brand of Heatcraft Refrigeration Products 2175 West Park Place Boulevard Stone Mountain, GA 30087 800.537.7775 www.thecoldstandard.com	LET090BK **Low Profile** **Walk-in**

Project:		QUOTATION:	**20140204100012;0 Item No: 1**
Location: ,		Submitted by:	**Mark Wilbers**
Customer:		DATE:	2/4/2014
Identity #:		☒ For Record	By:_____
Tag:		☐ For Approval	Date: _____

6.13	33.25	0.00	0.00	0.00	0.00	0.00	0.00	0.00

STANDARD FEATURES

Cabinet
- Aluminum textured panels
- Front Access to electrical and refrigeration components
- Small, low profile physical cabinet size with optimized interior space
- The electrical board is front facing for easy access
- Internal panels are isolated for quiet operation
- Liquid line solenoid wire harness factory installed for quick installation
- Pre-drilled holes on the back of the unit for room thermostat and controls

Drain Pan:
- Drain fitting is located to the back of the unit with larger diameter

Coil:
- Internally enhanced copper tubing and aluminum fin design for higher efficiency
- Schrader valve on suction header
- Sweat connections to reduce potential for leaks

Fan Guards and Motors:
- Improved plastic, round guard design
- Motor harness and solenoid harness are at the bottom of the unit for easy access
- Motor harness easily plugs in
- EC motors available factory-installed or as a drop-in replacement through InterLink™ Commercial Refrigeration

OPTIONS

Mounted Options:

None	

Ship Loose Options (by Unit):

None	

Ship Loose Options (by System):

None	

MINIMUM UNIT CLEARANCES

A Brand of Heatcraft Refrigeration Products 2175 West Park Place Boulevard Stone Mountain, GA 30087 800.537.7775 www.thecoldstandard.com	LET090BK **Low Profile** **Walk-in**

Project:		QUOTATION:	**20140204100012;0 Item No: 1**
Location: ,		Submitted by:	**Mark Wilbers**
Customer:		DATE:	2/4/2014
Identity #:		☒ For Record	By:_____
Tag:		☐ For Approval	Date: _____

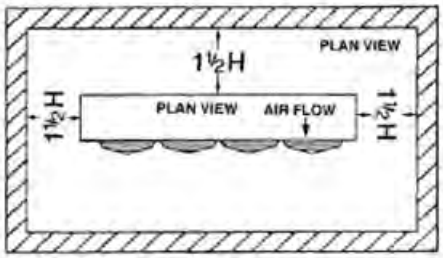

One evaporator

NOTE:
H = Total height evaporator coil surface.

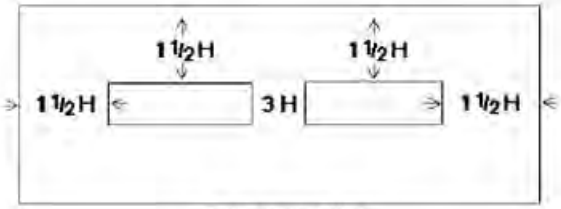

Two evaporators

SECTION 220500 - PLUMBING

PART 1 - GENERAL

1.1 RELATED DOCUMENTS

A. Drawings and general provisions of the Contract, including General and Supplementary Conditions, Division 1 Specification Sections, and Section 230100, "Mechanical General Provisions," apply to this Section.

1.2 SERVICE CONNECTIONS

A. The existing gas meter is there and being reused.

B. Make arrangements with local gas company for connection of gas service and meter. Gas company should verify new gas load with meter capacity.

1.3 PERMITS

A. Contractor shall give all required notices and secure all necessary permits. Inspection certificates from local authorities having jurisdiction shall be delivered to the Owner prior to final payment.

1.4 GENERAL REQUIREMENTS

A. Follow Plumbing Code for minimum requirements; where drawings or specifications are at variance with Code, follow whichever provides for maximum size or condition.

B. Comply with requirements of the Uniform Federal Accessibility Standards (UFAS).

C. All pipe, fittings, and fixtures that are connected to potable water systems must meet the current Water Drinking Act, and where applicable, meet NSF Standard 61, and be so labeled and be so certified. All plumbing valves, devices, fixtures and fittings shall be lead free.

1.5 SUBMITTALS AND SHOP DRAWINGS

A. Submit manufacturer's data on the following:

Plumbing Fixtures
Faucets
Supplies and Traps
Water Hammer Arrestors
Valves

Wall Hydrants
Submit shop drawings on the following:

Submit a schedule of all pipe materials to be used for each type of service.

1.6 WARRANTY-GUARANTEE

A. Contractor shall furnish written warranty, countersigned and guaranteed by the General Contractor, stating that work executed under this Section of the Specifications shall be free from defects of materials and workmanship for a period of 12 months from date of Substantial Completion.

B. During the guarantee period, the Contractor shall repair or replace defective material and workmanship and place same in working order to the satisfaction of the Engineer at no additional expense to the Owner.

C. Contractor shall service the systems for 12 months from date of Substantial Completion. Such service shall include all emergency services and adjustments, except cleaning of filters and screens.

PART 2 - PRODUCTS

2.1 TRAPS

A. Provide a trap for each fixture and piece of equipment requiring connections to drainage system. Supply traps with fixtures. Place each trap as near fixture as possible, and no fixture shall be double trapped. Traps installed on threaded pipe shall be recess drainage pattern. Trap on all floor drains shall be deep-seal type.

B. Exposed traps and drain piping shall be chromium plated.

2.2 WATER PIPING

A. Water piping shall be copper tubing, Type L, hard-tempered above ground. Piping shall be assembled with wrought-copper fittings using 95-5 solder.

2.3 GAS PIPING

A. Gas piping above ground 1/2" through 2" shall be Schedule 40 black steel screw fabricated using malleable-iron fittings. Gas piping and fittings exposed to the weather shall be Schedule 40 galvanized steel.

B. Provide shut-off valves on gas mains, risers, and branches where indicated and at connection to all gas-burning equipment.

2.4 VALVES

A. Provide valves on piping as indicated and as required to isolate fixtures and equipment and to give complete control of water in risers and branch lines. Valves shall be ball, unless otherwise indicated. All valves shall be lead-free.

B. Valves on copper water piping, up to and including 2", shall be bronze or brass. Valves on cold shall have extended shafts to match the pipe insulation thickness to prevent condensation. Catalog numbers indicated are NIBCO. Valves with equivalent characteristics by MILWAUKEE, LUNKENHEIMER, or CRANE CO. will be acceptable.

Type	Size	Catalog Number
Ball	2" and smaller	S-585-80-LF

C. All gas valves 3” and smaller shall be bronze body, threaded with bronze trim ball valves. Gas valves shall be UL-Listed. Valves shall be as manufactured by NIBCO model T-585-70-UL, or approved equal.

2.5 FIXTURES AND EQUIPMENT

A. Provide complete fixtures and equipment indicated on drawings. Catalog numbers are ELKAY, unless otherwise indicated. Provide supply stops for all fixtures. KOHLER or JUST fixtures may be used.

B. Provide Owner with any special tools required to perform maintenance on fixtures and fittings.

C. Wall hydrants shall be freezeless type, Model 65 satin-chrome finish, with loose key handle, vacuum breaker, and backflow preventer. WOODFORD MFG. CO. Contractor to select proper model to suit wall construction.

PART 3 - EXECUTION

3.1 PIPE INSTALLATION

A. Slip joints are permitted only in trap seals or on inlet side of traps. Use hub fittings for making union connections wherever practicable, in connection with dry vents.

3.2 CONNECTIONS TO EQUIPMENT

A. Make plumbing connections to all equipment requiring connections, including equipment in Contract and equipment furnished by others. Make all connections according to manufacturer's recommendations.

B. Provide hot water, cold water, waste, connections complete. Drawings are not intended to be complete in every respect concerning these items. Provide all manufacturer's recommended valves, unions, arresters, regulators, etc., as required by manufacturer.

3.3 FIXTURE SETTING HEIGHTS

A. Plumbing fixtures shall be at heights indicated and/or directed. Heights of handicapped plumbing fixtures shall be as governed by the Building Code, ANSI A117.1, and the requirements of the Uniform Federal Accessibility Standards (UFAS). Refer to architectural drawings.

3.4 INSPECTION AND TESTS

A. The new plumbing system shall be tested by the Contractor in the presence of the Owner. Governing authorities having jurisdiction shall be notified of test required by them, and Final Acceptance of work shall be contingent upon their approval. At least 48 hours notice shall be given prior to test. All costs of conducting test and furnishing necessary equipment for test shall be borne by the Contractor.

B. Upon completion of roughing-in and before setting fixtures, test new hot and cold water piping system at hydrostatic pressure of 100 psig and prove watertight at this pressure. Test water piping system to be concealed separately in same manner as prescribed for entire system.

C. Thoroughly clean and flush piping and apply chlorine solution to new system at least 3 hours to destroy nonspore-forming bacteria. Following chlorination, flush agent from system until water is both bacteriologically and chemically satisfactory to Public Health Officer.

D. If inspection or tests show defect, replace such defective work or materials and repeat inspection tests. Make repairs to piping with new materials. No caulking of screwed joints or holes shall be acceptable.

E. Test all gas piping at 50 psig with oil-free compressed air for 2 hours with no loss in pressure.

F. Clean equipment, pipe, valves, and fittings of grease, metal cuttings, and sludge accumulated by operations of system for testing. Stoppage or discoloration or other damage to parts of building, its finish or furnishings due to Contractor's failure to properly clean piping system shall be repaired without cost to the Owner.

END OF SECTION 220500

THIS PAGE LEFT INTENTIONALLY BLANK

SECTION 230100 - MECHANICAL GENERAL PROVISIONS

PART 1 - GENERAL

1.1 RELATED DOCUMENTS

A. Drawings and general provisions of the Contract, including General and Supplementary Conditions and Division 1 Specification Sections, apply to this Section.

B. This Section forms a part of all Divisions 21, 22, and 23 Sections.

1.2 APPLICABLE SPECIFICATIONS, CODES, AND STANDARDS

A. Latest effective publications of following Specifications, regulations, standards, codes, etc., as applicable, form a part of these Specifications the same as if written fully herein and shall be followed as minimum requirements.

Codes and ordinances of local governing agencies

AGA	American Gas Association
AHRI	Air Conditioning, Heating, and Refrigeration Institute
AMCA	Air Moving and Conditioning Association
ANSI	American National Standard Institute
ASHRAE	American Society of Heating, Refrigerating, and Air-conditioning Engineers
ASME	American Society of Mechanical Engineers
ASTM	American Society for Testing and Materials
IEEE	Institute of Electrical and Electronics Engineers
NAFM	National Association of Fan Manufacturers
NEC 2008	National Electrical Code
NEMA	National Electrical Manufacturers Association
NFPA	National Fire Protection Association
OSHA	Occupational Safety and Health Administration
SMACNA	Sheet Metal and Air-conditioning Contractors National Association
UFAS	Uniform Federal Accessibility Standards
UL	Underwriters Laboratories, Inc.
VFSR	Virginia Fire Safety Regulations
VUSBC	Virginia Uniform Statewide Building Code, 2009 Edition

1.3 DRAWINGS

A. General arrangements of indicated piping, ductwork, and equipment are diagrammatic only, do not scale. Where rearrangement is necessary, submit drawings of proposed changes for approval. Due to scale of drawings, offsets, fittings, and accessories may not be indicated. Work indicated, but having details omitted, shall be provided complete to perform function intended without extra cost. Investigate existing structural and finish conditions in building affecting plumbing, heating, ventilating, and air-conditioning work, etc., and arrange work accordingly. Furnish fittings, traps, offsets, vents, valves, and accessories required. Install equipment in accordance with manufacturer's recommendations and clearance requirements.

1.4 COORDINATION

A. Coordinate piping, ducts, and equipment with electrical, structural, and architectural plans and work in order to avoid omissions and to eliminate any interference. Report in writing discrepancies, if found, to the Engineer as soon as possible after discovery.

1.5 WORKMANSHIP

A. Workmanship shall be first class and of best quality in accordance with approved contemporary construction practices. Defective equipment and materials, or material damaged in the course of installation and tests, shall be replaced or repaired in an approved manner.

1.6 CUTTING

A. Cutting shall be carefully done. Repair damage to the building, piping, wiring, or equipment as a result of cutting for installation, using skilled mechanics of trade involved.

1.7 APPROVAL OF MATERIALS, FIXTURES, AND EQUIPMENT

A. See Specification Section 013300, "Submittals," or shop drawing submittal procedures. Within 30 days after award of the Contract and before any purchases are made, submit for approval a complete list of materials, fixtures, and equipment proposed, together with names of manufacturers and catalog numbers for each Specification Section. Furnish other detailed information where directed. No consideration will be given to partial lists submitted from time to time. Approval of materials shall be based on manufacturer's published ratings. Materials, fixtures, and equipment listed which are not in accordance with specified requirements shall be rejected. Contractor shall make resubmission of items not approved within 30 days from date of rejections. Submission

shall be complete with description, ratings, dimensions, and related items and any additional information required by the Architect.

B. Materials and equipment shall be new, conforming to these Specifications.

C. Two or more units of same class of equipment shall be product of single manufacturer; however, component parts of system need not be product of same manufacturer.

D. Mechanical design has given full consideration to space requirements for equipment specified. Contractor is responsible for selecting equipment that will be accommodated by this space. Equipment not conforming to space allotted shall be rejected.

E. Mechanical design has given full consideration for electrical requirements for equipment. Contractor is responsible for selecting equipment that will be accommodated by the electrical design indicated. Equipment not conforming to the electrical design provided under Division 26 is the Contractor's responsibility. All electrical changes required to accommodate the equipment provided shall be furnished and installed by the Contractor without change in Contract price or time of completion. This shall include but not be limited to wiring, conduit, circuit breakers, disconnect switches, starters, and controllers.

F. Submit one copy of equipment installation manuals to the Engineer for his use.

1.8 EQUIPMENT DESIGN

A. Equipment and accessories not specifically described or identified by manufacturer's catalog numbers shall be designed in conformity with ASME, ANSI, IEEE, or other applicable technical standards, suitable for maximum working pressure, and shall have neat and finished appearance.

1.9 SUPERVISION

A. The Contractor for each Section under this Division shall maintain a competent foreman on the job at all times to supervise the work and coordinate with other trades for the installation of the system. Submit foreman's qualifications, including master's trade license, to the Engineer for approval.

1.10 NOTICES AND FEES

A. Give all required notices, obtain all necessary permits (including a separate permit for the installation of refrigerant lines if required by the local "Authority Having Jurisdiction"), and pay all required fees.

1.11 RECORD DRAWINGS

A. Refer to Specification Section 017839 "Project Record Documents".

1.12 OPERATION AND MAINTENANCE MANUALS

A. Refer to Specification Section 017823 "Operation and Maintenance Data".

1.13 OWNER'S TRAINING

A. Upon completion of work and at a time designated by the Architect, the services of competent persons shall be provided as required to instruct Owner's representative in operation and maintenance of systems. Training sessions shall be a combination of on-site and in-classroom training and shall be a minimum of two 8-hour sessions. All training shall be video taped by the Contractor and provided in DVD format. Two copies of the DVD shall be submitted to the Owner.

1.14 WARRANTY-GUARANTEE

A. Contractor shall furnish written warranty, countersigned and guaranteed by the General Contractor, stating that work executed under this Section of the Specifications shall be free from defects of materials and workmanship for a period of 12 months from date of Substantial Completion.

B. Contractor shall service the systems for 12 months from date of Substantial Completion. Such service shall include all emergency services and adjustments, except cleaning/changing of filters. Adjustments and repairs to equipment shall be made by the original equipment manufacturer (OEM). Third party service agencies are not acceptable for making repairs or adjustments to equipment during the warranty period.

C. Equipment manufacturer and Contractor shall provide a one year material, labor and refrigerant warranty on all compressors. In addition, the manufacturer shall provide an extended 4 year material warranty on all compressors.

1.15 WELDER'S CERTIFICATIONS

A. Submit welder's certifications to the Architect for approval.

PART 2 - PRODUCTS

2.1 PIPE SLEEVES, PIPE HANGERS, PIPE SUPPORTS, DUCT SUPPORTS, AND FIXTURE SUPPORTS

A. Provide pipe sleeves, hangers, supports, duct supports, and fixture supports. Contractor shall be responsible for proper and permanent location. Pipe and duct shall not be permitted to pass through footings, beams, or ribs, unless indicated and/or approved.

B. Install pipe sleeves and properly secure in place with grout where pipes pass through masonry or concrete and at all fire-rated assemblies. Pipe sleeves, except in footings, shall be sufficient diameter to provide approximately 1/4" clearance around insulation or pipe. Fill void between insulation or pipe and sleeve with mineral wool to prevent sound transmission. Pipe sleeves in walls, floors, and partitions shall be Schedule 40 steel pipe. Extend sleeves above floor at least 1", pack space around pipe with fireproof material, and make watertight. Where pipes pass through waterproofing membranes, provide flashing sleeves with integral flashing flanges or clamping device of 16-ounce soft-sheet copper; extend at least 8" from sleeve. Thoroughly mop flashing flanges and shields into membrane.

C. Hang horizontal overhead runs of pipe with adjustable clevis-type hangers spaced not over 10 feet apart. Provide hangers other than aforementioned, if pipe size or other features make spacing at shorter intervals necessary. Pipe hangers shall be provided within 4 feet of all changes in direction of pipe. Pipe hangers shall not be installed on pipe fittings where fitting could bear the weight of connected pipe but instead shall be installed on pipe at intervals previously specified. Chain, strap, perforated bar, or wire hanger will not be permitted. Hangers shall have short turnbuckles or approved means of adjustment. Use spring-type hangers where required. Use trapeze hangers on pipes running parallel and close together. Inserts shall be cast iron or cast steel, of type to receive machine bolt in one horizontal direction and shall be installed before concrete is poured. Support vertical runs of pipe by clamps or collars spaced not over 20 feet apart or as required. Support chromium-plated pipe where required by cast-brass supports finished to match pipe. Hangers for copper tubing shall be copper plated where in contact with tubing. Hangers, including rods and clamps, shall be hot dipped galvanized exterior to the building and in all mechanical spaces, zinc plated in all interior spaces, except as otherwise specified.

D. Refrigeration piping, and condensate piping on roof shall be supported by support blocks manufactured by ROOF TOP BLOX model RTB-01, or approved equal. The support blocks must be designed to eliminate roof penetrations, flashings or damage to roofing membrane. Support body shall be made of recycled UV-resistant Polypropylene Copolymer. Base platform material shall be 1" thick, 25psi, type 4 closed cell structural foam to distribute and evenly cushion loads. Support top surface shall have molded in pipe organizing saddles and strut mounting cradle. The top surface shall also have screw guide indents and engineered internal screw thread gripping feature. Block must accept up to 1/2" threaded rod using side entry nut slots to allow fast top side assembly and piping height adjustments or attachment of galvanized slotted steel strut channel.

E. Supports for piping, ductwork, and equipment shall be attached to a structural member, not bridging. Piping, ductwork, and equipment shall not be attached to structural joist bridging or metal roof decking. Provide additional steel supports spanning between joists or beams for hanger attachments. Additional steel supports shall be approved by the Structural Engineer.

G. In areas supported by steel beams, secure hanger rods directly to beams.

H. For hangers supporting large diameter pipe (8 inch and larger) welded or bolted connections to support members are required.

I. C-clamps or beam clamps shall be permitted to be attached to one leg of the bottom chord on bar joists provided that they only support ductwork and the load does not exceed 50 lbs per hanger. For pipe support and loads greater than 50 lbs per hanger, provide center mounted hangers. Refer to structural drawings for details.

J. Provide galvanized steel shields or protection saddles to protect insulation at area of contact with hangers and supports. Where shields are used on pipes 1-1/2" and larger, provide insulation inserts at points of hangers and supports. Refer to Section 230700 for details.

K. Support and fasten fixtures and equipment in an approved manner.

L. Ductwork shall be supported in accordance with SMACNA, HVAC Duct Construction Standards, unless otherwise noted or indicated. Ductwork shall be supported using threaded rod or solid metal strap as required by SMACNA. No other materials, such as perforated metal strap, or cloth strap, are acceptable. Wire may be used to hang round duct smaller than 10"; however, solid metal strap shall be used to wrap around duct. Wire shall not be used for rectangular duct or round duct larger than 10".

2.2 DUCT AND PIPE PENETRATIONS THROUGH FLOORS, WALLS, AND CEILINGS

A. Fit exposed pipes passing through floors, finished walls, or finished ceilings with escutcheon of chromium-plated cast-brass plates on chromium-plated pipe, nickel-plated steel plates on ferrous pipe, or copper tubing. Plates shall be large enough to completely close hole around pipes and conceal pipe sleeves and shall be round, with least dimension at least 1/2" larger than diameter of pipe and insulation. Secure plates in an approved manner.

B. Fit ductwork passing through floors, walls, or ceilings with 22-gauge galvanized sheet-metal sleeves. Sleeves shall be large enough to completely close hole around duct and shall be at least 1/2" larger than outside dimensions of duct and insulation. Provide flanges on both sides of penetrations to cover the wall edge. For uncovered ducts, sleeves shall be of same material as duct. Secure sleeves and flanges in an approved manner.

C. Ducts passing through fire walls, smoke partitions, fire partitions, or floors shall be sealed with a UL rated system appropriate for the specified fire rating.

D. Pipes passing through firewalls, smoke partitions, fire partitions, or floors shall be sealed with a UL-rated system appropriate for the specified rating.

2.3 UNIONS

A. Unions shall be installed on each side of all control valves, regulators, and similar items and one side of all pieces of equipment, such as pumps, tanks, etc., so that such equipment shall be readily disconnected and removed if necessary.

B. Unions shall not be concealed in walls, ceilings, or partitions.

2.4 DIELECTRIC CONNECTIONS

A. Dielectric connections shall be provided at all connections between ferrous and nonferrous piping or metals, except drain piping connections at drain pans for cooling coils and valves having cast-bronze adapters.

2.5 ELECTRICAL WORK FOR EQUIPMENT UNDER MECHANICAL SYSTEMS

A. All non-integrated motor controllers and starters serving equipment installed under Division 23 Sections shall be furnished under those Sections and shall be turned over to Electrical Contractor, for installation by

Electrical Contractor. Controllers shall be equipped with all auxiliary contacts, poles, or devices necessary to permit interlocking and control required.

B. Fractional horsepower motors 1/2 HP and below shall be single-phase, 60 cycles, 120V; motors larger than 1/2 HP shall be 3-phase, 60 cycles, of voltages indicated on the electrical drawings, and conforming to the electrical service, except where indicated otherwise. Motors shall conform to latest NEMA requirements.

C. All electrical power wiring required for equipment installed under Division 23 Sections shall be provided under Division 26 Sections with all necessary approved wiring diagrams and guidance provided under Division 23 Sections, with the exception of power wiring to Automatic Temperature Control panels which shall be provided by the Automatic Temperature Control Contractor.

D. Raceways shall be 1/2" minimum. All wiring in rooms with exposed structure shall be installed in conduit. Label the front face of the cover on each junction box with indelible black marker indicating the number of each circuit contained in or running through the box. In areas where exposed construction is the final finished condition and conduit and junction boxes are called out to be painted, label the inside face of the covers.

E. All control and power wiring required for temperature control system and all interlocking and accessory control wiring required for equipment installed under Division 23 Sections shall be installed by the Plumbing, Mechanical, and Temperature Control Contractors.

F. Three-phase motors shall have magnetic across-the-line starters unless hereinafter indicated or required by Power Company to be otherwise. Provide overload relay in each phase or motor lead. Operation of any overload relay shall simultaneously open all phases.

G. Starters for motors under automatic control shall have built-in “hand-off-auto” selector switch.

H. All starters and controls shall be NEMA rated and NEMA I enclosed where mounted inside building, except in kitchens which shall be NEMA 4X-SS. Starters and controls mounted outside or where specifically called for shall be NEMA 3R Combination switch and magnetic starters shall be provided where indicated.

I. Auxiliary 120-Volt contacts shall be provided to give control and interlocking as required or as indicated.

J. Where control voltages are different from motor voltages, a control-voltage transformer shall be provided as a part of the starter.

K. The Contractor shall be responsible for coordinating with the Division 26 Contractor for providing properly sized circuit breakers to serve equipment and motors furnished which differ from that specified or indicated. This shall be further understood to include branch circuit wiring, conduit, disconnect switches, etc., in accordance with the appropriate codes and specifications. The cost of providing this increased electrical service and related work shall be included under the applicable section under which the equipment and motors are being furnished, at no additional cost to Owner.

L. The Automatic Temperature Controls Contractor shall be responsible for providing circuit breakers and power wiring and conduit from electrical panels installed under Division 26 to Automatic Temperature Controls panels.

M. The Mechanical Contractor shall be responsible for the installation and mounting of all duct smoke detectors in new ductwork. The duct smoke detector shall be furnished and provided with all fire alarm wiring under Division 26. Any and all Temperature Control wiring shall be provided under Division 23. Refer to the mechanical drawings for locations in new ductwork. Refer to the electrical drawings for locations of existing detectors to be replaced. Coordinate the installation of the detectors with the Electrical and Automatic Temperature Control Contractors.

2.6 MACHINERY ACCESSORIES

A. Provide oil-level gages, grease cups, and grease-gun fittings for machinery bearings as recommended by machinery manufacturer; where these lubricating means are not easily accessible, extend to locations as directed. Furnish all grease-gun fittings of uniform type.

2.7 WALL, PARTITIONS, AND CEILING ACCESS DOORS

A. The Contractor shall furnish and the General Contractor shall install prime coated steel access doors with lock where required, style necessary for surface in which placed, sizes as indicated or required for access to equipment, valves, dampers, filters, duct smoke detectors, and all other devices requiring access ACUDOR PRODUCTS, INC. model UF-5000 SCPC or approved equal.

B. Access doors shall have same fire rating as ceiling, floors, walls, and partitions in which installed.

2.8 AIR BALANCING DEVICES

A. Furnish any additional material or equipment, such as sheaves, belts, motors, and balancing devices, required to complete and/or adjust and balance the systems as recommended by the TAB Agency at no additional cost to the Owner. Failure to provide additional means of adjusting and balancing will not relieve the Contractor of responsibility for properly adjusting and balancing the various systems as intended.

2.9 DUCT SEALANT

A. Where duct is indicated to be sealed, utilize a fire resistive, water based, indoor/outdoor, U.V. resistant, non-fibrated duct sealant, DUCTMATE EverSeal, FOSTER DUCT-FAS 32-19 or approved equal.

B. Sealant shall have a volatile organic compound (VOC) rating of 24 g/L, less water.

C. Sealant shall meet all SMACNA pressure classes up to 10” w.g. and SMACNA seal classes A, B, and C.

D. Apply sealant with brush working sealant into all joints. For spiral duct, apply sealant to male end of coupling prior to fitting straight run of duct to coupling. Follow manufacturer’s instructions for all application requirements.

E. The use of duct sealing tape of any kind is unacceptable.

PART 3 - EXECUTION

3.1 PIPE INSTALLATION

A. Pipe systems shall be complete. Pipe shall be of size indicated or, where not indicated, shall be of size required to produce capacities of the equipment specified. No pipe shall be buried in floors, unless specifically indicated or approved.

B. Install runs of piping as indicated. Cut pipe accurately to measurements established at the building by the Contractor and work into place without springing or forcing. Do not cut or move any structural portions of the building without approval. Run piping above ground, parallel with lines of buildings, unless otherwise shown or specified.

C. Install piping to allow for expansion and contraction, using offsets, swing joints, expansion joints, anchors, and related items as may be necessary. Make connections to coils, pumps, and other equipment in such manner

as to eliminate undue strains in piping and equipment and to prevent noise transmission. Provide necessary fittings and bends to avoid springing of pipes during assembly. Weld expansion loops using long-radius ells. Make changes in pipe sizes with reducing fittings.

D. Pipe outlets of vent valves, safety valves, drip pans, overflow drains, condensate drains, backflow preventers, and other drain points to floor drain unless otherwise indicated. Gages, thermometers, and related items shall be carefully leveled. Thoroughly clean and flush piping in presence of the Architect, as installed and before automatic vents are installed.

E. Unless otherwise indicated, connections to equipment shall be as shown by manufacturer's data. Make piping connections to equipment with unions or flanged connections arranged so that equipment can be dismantled without disturbing the piping installation. Unions shall be accessible after building is complete. Provide valves to isolate equipment for service or removal.

F. Run horizontal water piping with pitch of at least 1" in 40'-0" and arrange to drain to minimum number of low points. Equip low points with drain valves and hose nipples not smaller than 3/4". Eccentric reducing fittings or eccentric reducing couplings must be installed where indicated or as required to bring bottoms of mains in line and prevent pockets.

G. Close pipe openings with caps or plugs during installation. Cover fixtures and equipment tightly and protect against dirt, water, and chemical or mechanical injury. Carefully free interior of pipe of superfluous material as work progresses. Upon completion of work, thoroughly clean fixtures, materials, and equipment and deliver in approved unblemished condition. Pitch closed loop water piping to vent at high points. Provide a manual air vent ball valve at all high points in the piping system.

H. Lay pipe true to line and grade with bells up-grade so pipe will have smooth and uniform invert. Keep pipe thoroughly clean so jointing compounds will adhere. Inspect each pipe section for defects before lowering into trenches. Allow no water in trenches during pipe laying or around joints until compound has set.

I. Ream pipe after cutting and before threading and remove burrs. Make screwed joints with graphite and oil or approved graphite compound applied to threads only. Cut threads full, and not more than three threads on pipe shall remain exposed. Caulking of threaded joints to stop or prevent leaks will not be permitted. Provide unions where required for disconnection. Use swing joints for branch connections to risers and mains.

J. Make copper tubing sweat joints with noncorrosive flux and lead-free solder recommended for service encountered or as indicated.

K. No joint shall be made under water. Secure watertightness and prevent damage or disturbing of joints during refilling process, or at other times after pipes have been laid, and joints made. Do not walk or work over pipes except as necessary in tamping until at least 2" of covering has been placed over pipe. Uncover joints showing leaks; remake joint at Contractor's expense.

3.2 GROUTING

A. Grout heavy equipment with Embeco pre-mixed grout. MASTER BUILDERS COMPANY. Follow manufacturer's instructions on container. Use Mix No. 1 where clearance between bedplate and foundation is 1" or less; for other clearances, use Mix No. 2. Use only where grout is confined or held under restraint.

3.3 EQUIPMENT INSTALLATION

A. Erect equipment in neat and workmanlike manner. Align, level, and adjust for satisfactory operation. Install so that connecting of piping and accessories can be made readily and so that parts are easily accessible for inspection, operation, maintenance, and repair. Minor deviation from indicated arrangements may be made as approved by Architect.

3.4 EQUIPMENT SUPPORTS AND FOUNDATIONS

A. Design and construct supporting structures of strength to safely withstand stresses to which they may be subjected and to distribute properly the load and impact over building areas. Conform to applicable technical societies' standards, also to codes and regulations of agencies having jurisdiction. Obtain approval before fabrication.

B. Provide adequate supports for roof-mounted mechanical equipment. Supports shall keep equipment clear of roof and transmit weight to roof structure as approved by Architect.

3.5 NOISE AND VIBRATION

A. Mechanical and electrical equipment shall operate without objectionable noise or vibration as determined by the Architect.

B. If such objectionable noise or vibration should be produced and transmitted to occupied portions of building by apparatus, piping, ducts, or other parts of mechanical and electrical work, make necessary changes and additions as approved, without extra cost to the Owner.

C. Isolators shall prevent, as far as practicable, the transmission of vibration, noise, or hum to any part of building.

D. Isolators shall suit vibration frequency to be absorbed. Provide isolator units of area and distribution to obtain proper resiliency under load and impact.

3.6 FLASHING

A. Provide cap flashing for roof-mounted fans, goosenecks, air intakes, vents, and the like.

3.7 PROTECTION OF EQUIPMENT AND MATERIALS

A. Responsibility for care and protection of mechanical equipment rests with Contractor until Substantial Completion of the work.

B. After delivery, before and after installation, protect equipment and materials against theft, injury, the environment, or damages from all causes.

C. Protect plumbing fixtures and other equipment with enamel or glaze surfaces from damage by covering and/or coating as approved.

D. Protect equipment outlets and pipe openings with temporary plugs or caps.

E. During construction, seal off all openings into interior of equipment and ductwork with sheet metal or taped polyethylene sheathing to prevent infiltration of dust.

F. Temporary (MERV 8) filters shall be provided a minimum of every 14 days for all fans that are operated during construction, and new (MERV 8) filters shall be installed after all construction dirt has been removed from the building just prior to testing and balancing. Following the testing and balancing, (MERV 8) filters shall be provided a minimum of every 14 days for all fans that are operated during construction. Just prior to Final Completion, all filters shall be replaced with the final (MERV 8) filters. Ducts shall be inspected for dust and dirt. Contractor shall provide a signed statement to indicate that new filters for each piece of equipment were installed just before Final Completion. Construction filters shall be removed and not be used as the final set of filters. The contractor shall keep a filter replacement log that includes equipment identifications and dates of filter installation. Log shall be provided to the Engineer and Owner for review on a monthly cycle. Should the Contractor fail to comply with the filter changes as specified, the Owner may, at his discretion, hire through a separate contract the specified filter changes

and withhold the cost for this work from the construction contract amount as a back charge to the Contractor.

G. Provide a spare filter (or sets of filters for equipment that require multiples) for each piece of equipment. Turn filters over to Owner with proper transmittal prior to Final Completion.

H. Equipment not designed for exterior installation (i.e., indoor heat pump units, cabinet unit heater unit heater, etc.) shall not be delivered to the job site until a location protected from the environment is provided. Location must be approved by the Architect and Engineer prior to delivery.

I. Equipment suitable for exterior installation (i.e., rooftop unit, exhaust fans, condensing units, etc.) shall not be delivered to the job site until it is ready to be installed in its permanent location.

3.8 CONTRACTOR'S RESPONSIBILITY FOR MANUFACTURER'S AUTHORIZED FIELD START UP:

A. The equipment manufacturer shall furnish a factory-trained and certified service technician without additional charge to start the HVAC equipment. This individual's certifications shall be submitted as a shop drawing along with the equipment and shall be reviewed and approved by the Engineer. Unit manufacturers shall maintain service capabilities no more than 100 miles from the job site.

B. The HVAC equipment to be started by the manufacturer's certified technician shall include: packaged rooftop air conditioning units, packaged rooftop ventilation units, variable refrigerant flow system.

C. The manufacturer shall furnish complete submittal wiring diagrams of the HVAC equipment as applicable for field maintenance and service.

D. Start up sheets on all equipment shall be submitted and reviewed by the engineer. An approved copy shall be included in the final TAB report. If required, this same representative shall be made available to review the startup sheets onsite with the Engineer and Owner.

3.9 CONTRACTOR'S RESPONSIBILITY FOR TESTING, ADJUSTING, AND BALANCING (TAB)

A. Provide the TAB Agency a full set of Contract Documents (drawings and technical specifications), all manufacturers' approved submittal data, and copies of revised data as soon as possible.

B. Ensure that a current TAB Engineer's certification certificate is kept on file.

C. Ensure all systems have been installed and are in 100% working order before the TAB Engineer is called to the job site, including but not limited to ductwork, piping, terminals, electrical, and ATC. The Contractor shall verify that each item of the Pre-TAB Checklist (see Appendix A) has been completed, and shall deliver a signed copy of the Pre-TAB Checklist to the Owner's Representative and the TAB Agency attesting that the project is complete and ready for TAB work to begin.

D. Provide adequate access to all points of measurement and adjustment and ensure that all dampers operate freely.

E. Provide a factory representative for all major pieces of equipment as requested by the TAB Agency to assist in operation and performance verification of equipment.

F. Cooperate with the TAB Agency to help operate and adjust the control systems directly related to TAB work and provide any specialties required to make such adjustments.

G. Carefully review the drawings and Specifications for the various systems noting all facilities incorporated in the design for purposes of adjusting and balancing. Should it be deemed necessary to provide additional dampers, baffles, valves, or other devices which would aid in the required adjusting and balancing, same shall be provided by the installing contractor.

3.10 CLEANING, PAINTING, AND IDENTIFICATION

A. Remove from site excess material, equipment protection, etc. Thoroughly clean piping, hangers, equipment, fixtures, and trimmings and leave every part in perfect condition ready for use, painting, or insulation as required.

B. Paint exterior surfaces of equipment supports and other ferrous metal work, except that which is galvanized, with one coat of RUSTOLEUM damp-proof red primer, or approved equal.

C. Finish painting of exposed piping, ductwork, equipment, and insulation in finished spaces shall be done under Section 099900, "Painting."

D. Water piping service and flow direction shall be indicated with outdoor grade 3.2 mil thick high gloss adhesive backed vinyl labels which identify the service by name (not initials) and the flow direction by arrows. Provide labels similar to Brimar, EZ Pipe Markers with arrow banding tape. Labels shall be used wherever piping is exposed, except in finished spaces, at all unit connections, and at 25-foot intervals for concealed piping located above accessible ceilings. Label and arrow heights shall be proportional to pipe sizes as follows:

Insulated and Un-insulated Pipe Size	Label Heights
Up to 1"	1"
1-1/4" to 2"	2"

E. Refrigerant piping service shall be indicated with outdoor grade 3.2 mil thick high gloss adhesive backed vinyl labels which identify the service by name (not initials). Provide labels similar to Brimar, EZ Pipe Markers. Labels shall be used wherever piping is exposed, at all unit connections, and at 25-foot intervals for concealed piping located above accessible ceilings. Label and arrow heights shall be 1".

F. Provide seals, signs, and tags on fire protection equipment at designated locations per NFPA.

G. Provide color-coded identification dots affixed to the ceiling grid for equipment, access doors, terminal equipment controllers, smoke detectors, filters, and valves concealed above ceilings. Provide a color-coded chart identifying type of equipment or valve. Chart shall be framed and mounted, under clear plastic, and located as directed by Owner.

3.11 EQUIPMENT MARKING

A. Label all mechanical equipment, including starters, control panels, and fans.

B. Labels shall be machine engraved, laminated, 1/8” thick, Bakelite, nameplate type. Labels shall be black faces with white letters.

C. Labels shall have 1/4" high letters.

D. Labels shall be rigidly attached using rivets or screws. Adhesive backing is not acceptable.

APPENDIX A

PRE-TAB CHECKLIST

A. GENERAL

1. All components of the HVAC system have been installed, including controls and control wiring.
2. Power wiring has been installed and energized to all motorized equipment. Also, all line voltage control wiring required has been installed.
3. All equipment has been started and run tested through all specified sequences of operation by factory-authorized representatives and all safety controls have been verified to be operational.
4. All required testing of piping and duct systems has been completed in accordance with the drawings and specifications.

B. AIR DISTRIBUTION AND VENTILATION SYSTEMS

1. All air system filters have been replaced with new filters. The air moving equipment, ductwork, and air terminals are installed and connected. All air systems are unobstructed and free of debris.
2. All manual volume control dampers required are installed and properly connected to adjustment handles. All damper handles are accessible and not covered by insulation or draw bands. All automatic dampers required have been installed with linkages connected and adjusted to provide the specified sequence of operation.
3. Access doors have been installed where required to allow inspection and servicing of duct-mounted dampers, equipment, and components.
4. All ductwork and connections of duct to air terminals have been checked, and no visible or audible leakage exists.
5. Fans are rotating in correct direction. Fans have been lubricated. Drive pulleys are aligned and belt tension is correct. Setscrews are tight securing keys into key-ways. Fan wheels turn freely and are balanced. Belt guards are in place.
6. Vibration isolators and flexible connectors have been installed where required. With fans in operation, there is no excessive vibration of fan assemblies or ductwork.

I

an authorized representative

_____ of

Signature and Title

_____ attest that all items

Company

contained in the above Pre-Tab Checklist have been completed and verified as

of this date: _____

END OF SECTION 230100

SECTION 230500 – HEATING, VENTILATING, AND AIR CONDITIONING

PART 1 - GENERAL

1.1 RELATED DOCUMENTS

A. Drawings and general provisions of the Contract, including General and Supplementary Conditions, Division 1 Specification Sections, and Section 230100, "Mechanical General Provisions," apply to this Section.

B. Refer to Specification Section 230900, "Automatic Temperature Controls," for additional requirements and coordination between equipment and controls.

1.2 WARRANTY-GUARANTEE

A. Contractor shall furnish written warranty, countersigned and guaranteed by the General Contractor, stating that work executed under this Section of the Specifications shall be free from defects of material and workmanship for a period of 12 months from date of Substantial Completion of the building. Refer to Section 230100 for additional warranty period responsibilities.

1.3 SUBMITTALS

A. Prior to fabrication of any ductwork, Mechanical Contractor shall prepare and submit for review and approval 1/4" scale ductwork shop drawings. Drawings shall indicate all equipment locations and double line ductwork layout. Drawings shall be coordinated with existing conditions and Architectural, Structural, Sprinkler, and Electrical Drawings.

B. Submit manufacturer's performance data and unit details on all products specified below or indicated on drawings.

1.4 PROTECTION OF EQUIPMENT AND MATERIAL

A. All equipment and material not specifically designed for exterior installation shall not be delivered to the job site until an indoor, dry location is available for storage. All equipment and material shall be covered and protected from dirt, debris, moisture, paint, coatings, and damage of any kind. Store off the floor, in a location approved by the Owner, to prevent contact with water.

B. All air-conveying equipment and material, including but not limited to rooftop units, indoor units, diffusers and ductwork, shall be kept clean as described above, and all airside surfaces shall be wiped clean (metal surfaces) prior to installation. Where equipment surfaces are subject to additional accumulation of dirt and debris, interior cleaning shall be done after the completion of ductwork installation at all unit openings.

1. Exterior surfaces of all equipment shall be cleaned at completion of construction in a manner that condition and appearance of equipment is the same as it left the factory.

2. No equipment shall be run without approval by the Engineer. The Contractor shall provide temporary filters for all intakes and return connections to air-conveying equipment at his own expense during the construction process in accordance with Specification Section 230100. Filters shall be changed every 14 days regardless of condition. The Contractor assumes full responsibility for cleanliness of all equipment operated during the construction period and any ductwork used to convey air during construction prior to meeting Substantial Completion. The Contractor shall clean all equipment to like-new condition as it appeared when it left the factory prior to substantial completion. All damages shall be repaired/replaced at the Contractor's expense.

3. Rooftop units are Owner provided and Contractor installed, Contractor shall receive and protect the units from any damages.

PART 2 – PRODUCTS

2.1 HEAT GENERATION (Not used)

2.2 REFRIGERATION (Not used)

2.3 <u>AIR HANDLING EQUIPMENT</u>

A. Rooftop Air Handling Units (RTU-3, RTU-4, RVU-5, RVU-6, RTU-7):
(All Rooftop Air Handling Units are <u>Owner furnished and Contractor installed</u>)

1. Rooftop Air Handling Units shall be built to the level of quality as herein specified and to the description of the Air Handling Unit Schedule.

2. Unless stated otherwise, rooftop air-conditioning units are to be shipped to the job in one piece, factory assembled. Modular units assembled to achieve a close proximation to the intent of this specification will not be considered equal. Where specified and applicable, all equipment shall be pre-wired, and factory certified by an approved testing agency such as ETL, UL, CSA prior to shipment.

3. The units shall be pre-wired and shall bear an approved label with all the necessary identification marks, electrical data, and any necessary cautions as required by the National Electric Code.

4. All electrical circuits shall undergo a dielectric strength test, and shall be factory tested and checked as to proper function.

5. Units shall be as manufactured by ENGINEERED AIR (NO SUBSTITUTIONS).

6. Unit Construction:

   a. Unit casing shall be of minimum 18 gauge satin coat galvanized sheet metal. Surfaces shall be cleaned with a degreasing solvent to remove oil and metal oxides and primed with a two-part acid based etching primer. Finish coat shall be polyurethane and applied to all exposed surfaces. All unprotected metal and welds shall be factory coated. Custom color shall be determined by the owner.
   b. All walls, roofs and floors shall be of formed construction, with at least two breaks at each joint. Joints shall be secured by sheet metal screws or pop rivets. Wall and floor joints shall be broken in and on all outdoor units roof joints broken out (exposed) for rigidity. All joints shall be caulked with a water resistant sealant
   c. The unit shall be provided with a 22 gauge solid galvanized metal liner over insulated areas including unit underside.
   d. Units shall be provided with access doors to the following components: fans and motors, filters, dampers and operators, access plenums, electrical control panels, burner, compressor compartments. Access doors shall be large enough for easy access. Removal of screwed wall panels will not be acceptable.
   e. Units shall be provided with hinged access doors which open outwards on all sections. Doors located on sections with positive pressure shall have a red warning label and a safety device must be affixed.
   f. All hinged access doors shall include welded steel frames. Doors shall be fully lined, come complete with bulb trim seal gasket and Leverlok handles, operable from both sides. <u>All doors shall have two (2) handles internally linked to allow access with the use of one (1) handle.</u> Doors utilizing continuous piano hinges must include stainless steel hinge assemblies. Pre-manufactured, non-thermal, 2” double wall doors as manufactured by AJ Manufacturing Inc. will be considered equal. Unit manufactures standard door construction will not be considered equal.
   g. All units shall be internally insulated with 2" thick nominal 3 lb./cu.ft. density acoustic insulation.
   h. Insulation shall be secured with steel angles. All longitudinal insulation joints and butt ends shall be covered by a sheet metal break to prevent erosion of exposed edges. Drain pans and all floor areas shall be insulated on the underside.
   i. Cooling coil drain pans shall be fabricated of stainless steel and are an integral part of the floor paneling, a minimum of 2" deep,

with welded corners. Drain pans shall extend a minimum of 6" downstream of coil face and be provided with a 1 ½" S.S. M.P.T. drain connection. Drain pans must have a fast draining pan and be sloped and pitched such that there is no standing water. Intermediate fast pans shall be provided between cooling coils where required for effective moisture removal.

j. The floor is to act as a drain pan complete with 2" upturn standing seams around perimeter (or 2" perimeter collar continuously welded to the unit base) and welded corners to ensure the floor is watertight. Alternately screwing down, tack welding and caulking of this collar is not acceptable. Provide 1" drain connections for complete drainability of the base pan.

k. In air-to-air heat reclaim units (RTU-1, RVU-3 & RVU-4), the exhaust section shall be provided with a stainless steel drain pans and shall be an integral part of the floor paneling, a minimum of 2" deep, with welded corners. Drain pans shall extend over the full exhaust fan plenum and be connected with a 1 ½" M.P.T. drain connection.

l. Units shall be weatherproofed and equipped for installation outdoors. This shall include generally for the prevention of infiltration of rain and snow into the unit, louvers or hoods on air intakes and exhaust openings with 1" galvanized inlet screens; diverters over all access doors; all joints caulked with a water resistant sealant; roof joints turned up 2" with three break interlocking design; outer wall panels extend a minimum of ¼" below the floor panel; drain trap(s) connections for field supply and installation of drain traps.

m. Units mounted shall incorporate welded floor to base construction. Floors shall be of three break upstanding design with welded corners and free of penetrations. Unit underside joints are caulked.

n. Provide factory cut and flanged hole in the base of the unit for power and control wiring and conduit penetrations.

o. Provide full perimeter roof mounting curb of heavy gauge sheet metal, minimum of 15" (305mm) high, and complete with wood nailer, neoprene sealing strip, and fully welded "Z" bar with 1" (25mm) upturn on inner perimeter, to provide a complete seal against the elements. External insulation and flashing of the roof-mounting curb shall be provided by the Roofing Subcontractor.

7. Fans:

a. Centrifugal fans shall be rated in accordance with AMCA Standard Test Code, Bulletin 210. Fan manufacturer shall be a member of AMCA. All fans and fan assemblies shall be dynamically balanced during factory test run. Fan shafts shall be

selected for stable operation at least 20% below the first critical RPM. Fan shafts shall be provided with a rust inhibiting coating.

b. Exhaust fans (RVU-3 & RVU-4) and supply fan (RTU-2) shall be single low pressure forward curved and shall be equipped with greaseable, self-aligning ball or roller type pillow block bearings.

c. Exhaust fan (RTU-1) shall be airfoil plenum type. Thrust restraint isolators shall be provided parallel to the shaft centerline to minimize axial movement and bending movements of the blower assembly(s). Drive side bearings on plenum fans shall be adapter style to ensure even clamping of the bearing sleeve to the shaft. Provide optional open wire mesh protective discharge screen. Removable screens at access doors are not acceptable.

d. Supply fans (RVU-3, RVU-4 & RTU-3) shall be Airfoil and/or BI fans and shall be equipped with greaseable, self-aligning ball or roller type pillow block bearings.

e. Drives shall be fixed. All drives shall be provided with a rust inhibiting coating.

f. Fan motors shall be ODP (open drip proof) super high efficiency.

g. Provide factory mounted and wired variable frequency drives on all supply fan motors and exhaust fan motors for units with energy recovery. Drives shall be as manufactured by ABB, no substitutions. Unit manufacturer is responsible for sizing.

8. Coils:

a. Coils shall be 1/2" O.D. as manufactured by Engineered Air, constructed of copper tube, aluminum fin, and copper headers/distributors and galvanized steel casing.

b. Fins constructed of aluminum shall be rippled for maximum heat transfer and shall be mechanically bonded to the tubes by mechanical expansion of the tubes. The coils shall have a galvanized steel casing. All coils shall be factory tested with air at 300 psig while immersed in an illuminated water tank.

c. The refrigerant evaporator coil shall be equipped with distributors connected to the coil by copper tubes. Refrigerant coils shall be alternate tube circuited in order to distribute the cooling effect over entire coil face at reduced load conditions. Hot gas bypass inlet shall be at the refrigerant distributor. Provision for use of thermal expansion valves must be included for all circuits.

d. Headers shall be inside the unit. Provide auxiliary drain pan complete with ½" MPT drain connection at headered end of cooling coils. The non headered end of the coil shall be fully concealed.

e. Coil shall be removable from the unit at the headered end, unless shown otherwise on the drawings.

f. Access between coils and major components shall be no less than 24 inches.

g. All exterior coils shall be protected with hail guard.

9. Gas Heat Section - Indirect Fired:

a. Heating section shall be indirect natural gas fired. The entire package, including damper controls, fan controls, and all other miscellaneous controls and accessories shall be approved by an independent testing authority and carry the approval label of that authority as a complete operating package. Burner assemblies utilizing third party controllers will not be accepted.
b. The burner must exceed the ASHRAE 90.1 requirement of steady state efficiency at low fire. Minimum steady state efficiency at low fire must be documented to meet or exceed 90%.
c. Operating natural gas pressure at unit(s) manifold shall be 7"w.c.
d. Manifolds shall be provided to FM standards.

e. Heat Exchanger/Burner Assembly:

(1) Heat exchanger shall be a primary drum and multi-tube secondary assembly constructed of titanium stainless steel with multi-plane metal turbulators and shall be of a floating stress relieved design. Heat exchanger shall be provided with condensate drain connection. The heat exchanger casing shall have 1" of insulation between the outer cabinet and inner heat reflective galvanized steel liner. Blower location shall be engineered to improve the required air flow pattern around the heat exchanger. Using duct type furnaces and closed coupled blowers are not acceptable.
(2) Units shall incorporate high efficiency heat exchangers tested and certified to ANSI/CSA standards to provide a minimum of 90% efficiency throughout the entire operating range. The manufacturer shall be routinely engaged in the manufacture of this type of high efficiency equipment.
(3) The heat exchanger/burner assembly shall be a blow through positive pressure type. Units shall have an interrupted pilot ignition system to provide increased safety. Units using continuous or intermittent pilots are not acceptable.
(4) Flame surveillance shall be from the main flame after ignition not the pilot flame. The burner and gas train shall be in a cabinet enclosure. Atmospheric burners or burners requiring power assisted venting are not acceptable.
(5) The heat exchanger/burner assembly shall include 15:1 turndown for all input ranges. The high turn down heat exchanger/burner assembly minimum input shall be capable of controlling 6.7% of its rated input, excluding the

pilot assembly, without on/off cycling and include built in electronic linearization of fuel and combustion air. Efficiency shall increase from high to low fire.

f. Venting provisions must be in accordance with CAN/CSA Standard B149.1, ANSI Z223.1-NFPA 54, and local authorities having jurisdiction.

g. Controls:

(1) Provide electronic control module (Modulating Fuel with Modulating Combustion Air) complete with proportional and integral control with discharge air sensor to maintain set point temperature and provide rapid response to incremental changes in discharge air temperature. Combustion air motor speed varies proportionally in response to the modulation of gas flow to provide optimum fuel/air mixture and efficiency at all conditions. Combustion blower RPM shall be proved using a hall effect speed sensor. Two speed or step speed combustion blowers are not acceptable. Third party controllers to achieve the required function, factory or field mounted, are not acceptable.

(2) Alternate manufacturers units that do not incorporate a variable speed combustion air blower shall have a modulating gas valve and a combustion air damper with a linear linkage connected to an actuator which has a minimum of 100 steps of control.

(3) Heating control function shall be modulating discharge via signal from the unit mounted primary controller.

(4) Discharge air sensor shall be field mounted in supply ductwork and wired to specified terminal by mechanical contractor.

(5) Provide a makeup air reverse airflow high limit switch in series with the standard high limit switch mounted in the blower discharge.

10. Recovery Air Total Energy Wheel (RVU-3 & 4, RTU-1):

a. Provide an ARI certified Recovery Air wheel. The performance of the wheel is to be ARI tested and certified as an individual component. The effectiveness shall be reflective of the component performance only without the benefit of packaged equipment. Acceptable manufacturer is ENGINEERED AIR, (NO SUBSTITUTIONS).

b. The wheel shall be a minimum of 10 inches in depth, constructed of sheet aluminum, with alternate layers glued to each other for

stability. Wheels shall be tension wound on to a central hub. All aluminum surfaces shall be coated with a "zeolite" 4 Å molecular sieve coating to provide water vapor transfer from one air stream to the other. The wheel shall be cleanable with compressed air without damage to the aluminum or desiccant. Alternate reclaim devices shall meet or exceed the performance noted in the schedules without exceeding the fan power requirements specified.

c. Wheels are held securely together with metal spokes extending radially from the hub to the peripheral banding. Spokes are flush mounted to rotor media. Wheels shall be provided in one piece construction.

d. The wheel shall be supported by two pillow block bearings which in turn are supported by a steel support. The bearings shall be located in the shadow of the bearing support member and the division between air streams to maximize the free area of the rotor as much as possible. The bearings shall be replaceable without removing the wheel from the air handling unit.

e. Wheels shall be provided with non-contact labyrinth seals around the perimeter of the wheel and across the face at the division between the supply and exhaust sectors. Brush style seals will not be acceptable. Adjustable seals shall be spaced not more than 1/32" from the rotor surface.

f. The unit shall be provided with a purge system to allow a percentage of outdoor air to sweep through the exhaust air sector to eliminate the possibility of exhaust air to the supply air stream.

g. The manufacturer shall ensure that the pressure at the entering side of the exhaust air sector of the wheel is lower than the pressure at the entering side of the supply air sector. In the case of draw-through fans, this will necessitate a field adjustable damper in the exhaust system upstream of the total energy wheel. The manufacturer shall select the supply and exhaust fans to provide the additional air for purge where required.

h. The wheel shall be driven by a continuous V-belt around the outer perimeter of the wheel connected to a 3 phase, inverter driven, high torque/high turndown, AC motor for variable speed applications. Access to the motor and the drive shall be from the face of the wheel.

i. Variable Speed Control:

(1) Provide a solid state control system, to provide discharge air temperature control, free-cooling function, summer-winter changeover, and prevention of frost formation on the wheel when necessary.

(2) An adjustable set point on the face of the controller shall allow a selection of 52°F to 74°F discharge air temperature. In the heating mode, as the discharge air temperature nears the set point, the speed of rotation of the wheel is slowed to maintain set point. When the minimum speed is reached, and there is a cooling demand, the wheel will stop completely. The wheel will remain off until the outdoor air temperature exceeds the exhaust air temperature, at which time the wheel will resume operation at full RPM.

(3) The frost prevention mode overrides the temperature control mode and shall be enabled when the outdoor air temperature drops below the frost threshold. The wheel speed shall be controlled to maintain a specific dry bulb temperature in the exhaust air that coincides with 90% RH. The calculated value is based on the estimated space RH, which shall be a selectable feature on the controller.

11. QDT Heat Pipe Thermal Recovery Unit (RVU-3 & 5):

a. Provide an air-to-air heat pipe exchanger with performance as shown in the schedule. Heat pipe manufacturers shall provide, at the Engineer's request, samples of tubes with the internal wick before and after expansion of the tubes.

b. Heat exchanger core shall be of 5/8" or 1" (as required) seamless aluminum tubing permanently expanded into fins. Each tube shall be an individually sealed heat pipe filled with a working fluid conforming to the Mechanical Refrigeration Code, CSA Standard B52, ANSI/ASHRAE Standard 15 – Safety Code for mechanical refrigeration. Tubes shall include flow separators whenever vapor and condensate streams interact limiting the heat transfer capacity of the pipe.

c. The secondary surface shall be continuous plate aluminum fins of corrugated design to produce maximum heat transfer efficiency. Spiral fins are not acceptable.

d. The capillary wick of each heat pipe shall be an integral part of the inner wall of the tube to provide a completely wetted surface for maximum heat pipe capacity, with minimum heat transfer resistance. Heat pipes manufactured without capillary wick or where the wick is not acceptable to the Engineer shall have a minimum of 20% additional rows than that shown in the schedule. Where additional rows are provided, the heat pipe shall be increased in face area to provide a pressure drop equal or less than that shown in the schedule.

12. Refrigeration:

a. Rooftop units shall be ETL approved and operate down to 50°F as standard. Units shall have multiple compressors. All refrigeration circuits shall be equally sized and separate from each other. Refrigeration circuits shall be complete with liquid line filter-driers, service ports fitted with Schraeder fittings, load compensated thermal expansion valves with external equalizers, combination sight glass moisture indicators, automatic reset low pressure control, manual reset high pressure control and insulated suction lines. The complete piping system shall be purged and pressure tested with dry nitrogen, then tested again under vacuum. Unit shall then be factory charged with R-407C refrigerant. Each system shall be factory run and adjusted prior to shipment.

b. The hot gas reheat circuit (RTU-1 & 3) shall include check valves, stepper valve, receiver, flash intercooler, liquid line solenoid, hot gas bypass line solenoid and accumulator.

c. Hot gas bypass shall be provided on the lead compressor to maintain adequate suction pressure in the event of low loads. Hot gas bypass used for capacity reduction shall not be acceptable.

d. Compressors shall be scroll type, 3600 RPM, set on resilient neoprene mounts and complete with line voltage break internal overload protection, internal pressure relief valve and crankcase heater.

e. Compressors (RTU-1, RVU-3 & 4) shall be located in a service enclosure complete with hinged access doors with leverlok handles for ease of service. The enclosure shall match the construction of the unit.

f. Compressors (RTU-2 & 3) shall be located on the side of the unit in a service enclosure complete with hinged access doors with leverlok handles for ease of service. Bottom of service enclosure shall be covered with 1” birdscreen to allow ventilation of compressors.

g. Units RTU-2, RVU-3 & 4 shall have a minimum of (3) three individually circuited compressors. Units RTU-1 & 3 shall have a minimum of (4) four individually circuited compressors.

h. Compressors shall be provided with a 5-year extended warranty including material, labor and refrigerant.

i. Condenser coils shall be copper tube type, mechanically expanded into aluminum fins. Coils shall be factory tested with air at 300 psig while immersed in an illuminated water tank. Coils shall have galvanized steel coil casings.

j. Condenser fans shall be direct driven propeller type arranged for vertical draw through airflow. Motors shall be weather resistant type, with integral overload protection and designed

for vertical shaft condenser fan applications. Fan and motor assemblies shall be mounted on a formed orifice plate for optimum efficiency with minimum noise level.

k. Controls shall include compressor and condenser fan contactors and overload protection, control circuit transformer, cooling relays and ambient compressor lockout. Head pressure actuated fan cycling control shall be provided on all multiple condenser fan units.

l. Provide five minute anti-cycle and interstage time delay timers.

m. Equipment manufacturer shall provide a unitary electronic temperature control system with the capability of providing up to 3 stages for RTU-2, RVU-3 & 4 and 4 stages for RTU-1 & 3 of cooling control to maintain discharge temperature. The minimum run and off time for compressors shall be 4 minutes at full load start up, and may range up to 8 minutes under part load conditions. The controller shall incorporate a PI (proportional/integral) control scheme that reduces temperature drop by resetting to the set point after each stage is cycled on. The controller shall be able to accept a reset signal from the building management system. Third party control systems to achieve the required function, installed at the factory or in the field, are not acceptable.

13. Filters:

a. Filter sections shall be provided with adequately sized access doors to allow easy removal of filters.

b. Filters shall be lift out from an access plenum upstream of the filters. Lift out 2" filters shall fit into a horizontal track from which they are lifted up and out (face load).

c. 2" Pleated Panel Disposable Filters: An optimum blend of natural and synthetic fiber media with a rust resistant support grid and high-wet strength beverage board enclosing frame with diagonal support members bonded to the air entering and air exiting side of each pleat. The filter media shall have a minimum efficiency of 30%- 35% on ASHRAE Standard 52.1-92, and a minimum of MERV 8 per ASHRAE 52.2. Rated U.L. Class 2.

14. Dampers:

a. Damper frames shall be 5” x 1” x .125” (minimum thickness) 6063T5 extruded aluminum hat channel with hat mounting flanges on both sides of the frame. Each corner shall be reinforced with two die formed internal braces and machine stacked for maximum rigidity.

b. Blades shall be airfoil type heavy gauge extruded aluminum with integral structural reinforcing tube running full length of each

blade. Blade edge seals shall be extruded double edge design with inflatable pocket which enables air pressure from either direction to assist in blade seal off. Blade seals shall be mechanically locked in extruded blade slots, yet shall be easily replaceable in field. Adhesive or clip-on type seals are unacceptable.

c. Bearings shall be non-corrosion molded synthetic. Axles shall be hexagonal (round not acceptable) to provide positive locking connection to blades and linkage. Linkage shall be concealed out of the airstream, within frame to reduce pressure drop, noise and maintenance.

d. Submittal must include leakage, maximum airflow and maximum pressure ratings based on AMCA publication 500. Damper shall be tested and licensed in accordance with AMCA 511 for Air Performance and Air Leakage. Dampers shall meet the requirements of the International Energy Conservation Code by leaking less than 3 cfm/sq. ft. at 1" of static pressure and shall be AMCA licensed as Class 1A. Dampers shall be Ruskin Model CD50.

e. Outside air, exhaust air and recirculation air dampers shall be parallel blade type with a two-position operator. Outside air and exhaust air damper operators shall spring return closed on a loss of power. Recirculation air damper shall fail open on a loss of power.

f. Return air and outside air dampers (RTU-2 & 3) shall be parallel blade type with a two-position operator. Dampers shall be linked together to work simultaneously with the return air damper closing as the outside air dampers opens. Damper operator shall spring return closed on loss of power, closing the outside air damper.

15. Factory Supplied Control/Wiring:

a. Provide a system of motor control, including all necessary terminal blocks, motor contactors, motor overload protection, grounding lugs, control transformers, auxiliary contactors and terminals for the connection of external control devices or relays.

b. Provide factory mounted airflow measuring devices in the outside air section of each unit. Devices mounted in the fan inlet must be Piezometer Ring Airflow Measuring Systems. Probe style devices that obstruct the inlet cone are not acceptable. Devices shall measure airflow via pressure differential. Devices utilizing standard pitot and thermal technologies are not acceptable. Plenum style devices must be Tek-Air (IAQ-Tek) or equal. All devices must have an accuracy of +/-5% for the given application.

c. Fire alarm circuits (where required) shall be powered from a relay in unit circuitry.

d. Provide BACNET I/P interface controller to interface unit manufactures controls with the building management system.

e. Automatic controls including variable frequency drives shall be housed in a control panel mounted in or on the unit, which will meet that standard of the specific installation. The control panel shall be heated and ventilated.

B. Makeup Air Unit (MAU-1):

1. Make-Up Air unit shall be as manufactured by GREENHECK or approved equal provided all specifications are met. GREENHECK Model IG equipment is used as the basis of design. Performance to be as scheduled on plans.

2. Furnace and Controls: Indirect-gas fired furnace shall be 80% efficient, ETL list and have a blow through fan design. Furnace shall be capable of operation with Natural or LP gas and have a power venting system. The heat exchanger shall be constructed of aluminized steel or stainless steel. Standard furnace features shall include main gas pressure regulator, main gas valve, electronic staged or electronic modulating controls, direct spark ignition system, high limit and a 24 volt control transformer. Furnace shall be insulated and have double wall construction.

3. Temperature Control: Furnace heat output shall be controlled based on a field adjustable discharge temperature set point. Discharge temperature sensor shall be factory mounted and wired to the unit control center. Furnace(s) shall have 16 stages of control.

4. Unit Casing and Frames: Unit shall be of internal frame type construction of galvanized steel. All frames and panels shall be G90 painted steel with PERMATECTOR. Where top panels are joined there shall be a standing seam to insure positive weather protection. All metal-to-metal surfaces exposed to the weather shall be sealed, requiring no caulking at job site. All components shall be easily accessible through removable doors.

5. Fan Section: Centrifugal fans shall be double width, double inlet. Fan and motor shall be mounted on a common base and shall be internally isolated. All blower wheels shall be statically and dynamically balanced. Ground and polished steel fan shafts shall be mounted in permanently lubricated ball bearings. Bearings shall be selected for a minimum (L10) life in excess of 100,000 hours at maximum cataloged speeds.

6. Motors and Drives: Motors shall be energy efficient, complying with EPACT standards, for single speed ODP and TE enclosures. Motors shall be permanently lubricated, heavy duty type, matched to the fan load and furnished at the specified voltage, phase and enclosure. Drives shall be sized for a minimum of 150% of driven horsepower. Pulleys shall be cast and have machined surfaces, 10 horse power and less shall be supplied with an adjustable drive pulley.

7. Electrical: All internal electrical components shall be prewired for single point power connection. All electrical components shall be UL listed, recognized or classified where applicable and wired in compliance with the National Electrical Code. Control center shall include motor starter, control circuit fusing, control transformer for 24 VAC circuit, integral door interlocking disconnect switch and terminal strip. Contactors, Class 20 adjustable overload protection and single phase protection shall be standard.

8. Filter Section: Filters shall be mounted in a V-bank arrangement such that velocities across the filters do not exceed 550 feet per minute. Filters shall be easily accessible through a removable access panel.

9. Weather Hood: Weather hoods shall be constructed of G90 painted steel with PERMATECTOR with birdscreen mounted at the intake.

10. Provide two position damper at outside air intake. Damper shall be open when the unit is running and closed when the unit is off.

11. Provide welded aluminum unit roof curb. Curb shall be insulated with 1", 3lb. density insulation. Curb height shall be 18".

C. Exhaust Fans:

1. Fans shall be size, type, and have capacity as indicated on drawings. GREENHECK, LOREN COOK, or approved equal.

2. Downblast power roof ventilators shall have aluminum housing, backward-inclined aluminum fan wheel, gravity-type back-draft dampers, bird screen, aluminum curb cap with pre-punched mounting holes, aluminum rub ring, motor isolated shock mounts, corrosion-resistant fasteners, lifting lugs, and factory-wired NEMA 1 toggle disconnect switch. Provide belt drive as indicated. Shaft shall be mounted in ball bearing pillow blocks. Bearings shall have grease fittings. Provide adjustable pulley and motor plate on belt drive units.

3. Kitchen Hood Exhaust Fan shall be roof mounted belt drive upblast centrifugal fan, backward inclined aluminum wheel, motor and drives

isolated on shock mounts. Provide fan with ventilated curb extension and hinged kit. Fan shall be UL-762.

4. Ceiling fans shall be constructed of galvanized steel, with forward curved direct-drive centrifugal fans. Provide factory-wired plug-type disconnect, gravity back-draft damper, and ceiling grille.
5. Fans shall be licensed to bear the AMCA Air and Sound Certified Ratings Seal. Fan air performance ratings shall be based on tests conducted in an AMCA registered laboratory for AMCA 210 air performance testing. The Test Standard used shall be ANSI/AMCA Standard 210-85, ANSI/ASHRAE Standard 51-1985, "Laboratory Methods of Testing Fans for Rating." All sizes must be tested, calculations to other sizes not acceptable. Fan sound performance shall be based on tests conducted in an AMCA registered laboratory for AMCA 300 Sound Performance Testing. The Test Standard used shall be AMCA 300 "Reverberant Room Method for Sound Testing of Fans." All sizes must be tested, calculations to other sizes are not acceptable. Air or Sound Test results are to be included in submittal.

6. Provide solid-state speed controls for all direct drive fans.

7. All fans shall be statically and dynamically balanced.

8. Install as required for quiet operation.

2.4 UNITARY EQUIPMENT

A. Variable Refrigerant Flow Heat Pump System:

1. System Description:

a. The variable capacity, heat pump heat recovery air conditioning system shall be a MITSUBISHI ELECTRIC CITY MULTI VRFZ (Variable Refrigerant Flow Zoning), (NO SUBSTITUTIONS). The systems shall be the R2-Series (simultaneous cooling and heating) split system heat pump.
b. The system shall consist of outdoor unit, Branch Circuit (BC) Controller, multiple indoor units, Central Controller (EB) and automation interface (DC600E). Each indoor unit or group of indoor units shall be capable of operating in any mode independently of other indoor units or groups. System shall be capable of changing mode (cooling to heating, heating to cooling) with no interruption to system operation. Each indoor unit or group of indoor units shall be independently controlled. The sum of connected capacity of all indoor air handlers shall range from 50% to 150% of outdoor rated capacity.

2. Quality Assurance:

   a. The units shall be listed by Electrical Laboratories (ETL) and bear the ETL label.
   b. All wiring shall be in accordance with the National Electrical Code (N.E.C.).
   c. The units shall be manufactured in a facility registered to ISO 9001 and ISO14001 which is a set of standards applying to environmental protection set by the International Standard Organization (ISO).
   d. A full charge of R-410A for the condensing unit only shall be provided in the condensing unit.

3. Delivery, Storage and Handling: Unit shall be stored and handled according to the manufacturer's recommendation.

4. Warranty:

   a. The units shall be covered by the manufacturer's limited warranty for a period of one (1) year from date of installation.

   b. The systems must be:

      (1) Installed by a contractor that has successfully completed the MITSUBISHI ELECTRIC three day service course, AND
      (2) Verified with a completed commissioning report submitted to and approved by the MITSUBISHI ELECTRIC Service Department,

      Then the units shall be covered by an extended manufacturer's limited warranty for a period of five (5) years from date of installation.

   c. In addition the compressor shall have a manufacturer's limited warranty for a period of seven (7) years from date of installation.
   d. If, during this period, any part should fail to function properly due to defects in workmanship or material, it shall be replaced or repaired at the discretion of the manufacturer.
   e. This warranty shall not include labor.

5. Manufacturer shall have a minimum of twenty-nine continuous years of HVAC experience in the U.S. Market.

6. All manufacturer technical and service manuals must be readily available for download by any local contractor should emergency

service be required. Registering and sign-in requirements which may delay emergency service reference are not allowed.

7. The system shall be installed by a contractor with extensive CITY MULTI install and service training. The mandatory contractor service and install training should be performed by the manufacturer.

B. Outdoor Unit (OU-4 and 5):

1. General: The outdoor unit shall be used specifically with VRFZ components. The outdoor units shall be equipped with multiple circuit boards that interface to the controls system and shall perform all functions necessary for operation. Each outdoor unit module shall be completely factory assembled, piped and wired and run tested at the factory.

   a. All units shall be provided with twinning kits. Kits shall be piped together in the field, without the need for equalizing line(s).
   b. Outdoor unit shall have a sound rating no higher than 60 dB(A) individually or 64 dB(A) twinned. Units shall have a sound rating no higher than 50 dB(A) individually or 53 dB(A) twinned while in night mode operation.
   c. Both refrigerant lines from the outdoor unit to the BC (Branch Circuit) Controller shall be insulated.
   d. There shall be no more than 3 branch circuit controllers connected to any one outdoor unit.
   e. Outdoor unit shall be able to connect to up to 50 indoor units depending upon model.
   f. The outdoor unit shall have an accumulator with refrigerant level sensors and controls.
   g. The outdoor unit shall have a high pressure safety switch, over-current protection, crankcase heater and DC bus protection.
   h. The outdoor unit shall be capable of operating in heating mode down to -4°F ambient temperature or cooling mode down to 23°F ambient temperature, without additional low ambient controls.
   i. The outdoor unit shall have a high efficiency oil separator plus additional logic controls to ensure adequate oil volume in the compressor is maintained.
   j. Unit must defrost all circuits simultaneously in order to resume full heating more quickly. Partial defrost which may extend “no or reduced heating” periods shall not be allowed.

2. Unit Cabinet: The casing(s) shall be fabricated of galvanized steel, bonderized and finished. Unit’s cabinets shall be able to withstand 960 hours per ASTM B117 criteria for seacoast protected models.

3. Fan:

   a. Each outdoor unit module shall be furnished with one direct drive, variable speed propeller type fan. The fan shall be factory set for operation under 0 in. external static pressure, but capable of normal operation under a maximum of 0.24 in. external static pressure via dipswitch.
   b. All fan motors shall have inherent protection, have permanently lubricated bearings, and be completely variable speed.
   c. All fan motors shall be mounted for quiet operation.
   d. All fans shall be provided with a raised guard to prevent contact with moving parts.
   e. The outdoor unit shall have vertical discharge airflow.

4. Coil:

   a. The outdoor coil shall be of nonferrous construction with lanced or corrugated plate fins on copper tubing.
   b. The coil fins shall have a factory applied corrosion resistant blue-fin finish.
   c. The coil shall be protected with an integral metal guard.
   d. Refrigerant flow from the outdoor unit shall be controlled by means of an inverter driven compressor.
   e. The outdoor coil shall include 4 circuits with two position valves for each circuit, except for the last stage.

5. Compressor:

   a. Each outdoor unit module shall be equipped with one inverter driven scroll hermetic compressor. Non inverter-driven compressors shall not be allowed.
   b. A crankcase heater(s) shall be factory mounted on the compressor(s).
   c. The outdoor unit compressor shall have an inverter to modulate capacity. The capacity shall be completely variable with a turndown of 19%-5% of rated capacity, depending upon unit size.
   d. The compressor will be equipped with an internal thermal overload.
   e. The compressor shall be mounted to avoid the transmission of vibration.
   f. Field-installed oil equalization lines between modules are not allowed. Prior to bidding, manufacturers requiring equalization must submit oil line sizing calculations specific to each system and module placement for this project.

6. Electrical:

   a. The outdoor unit shall be controlled by integral microprocessors.
   b. The control circuit between the indoor units, BC Controller and the outdoor unit shall be 24VDC completed using a 2-conductor, twisted pair shielded cable to provide total integration of the system.

C. Branch Circuit (BC) controllers (BC-4 & 5):

1. General: The BC (Branch Circuit) Controllers shall be specifically used with R410A systems. These units shall be equipped with a circuit board that interfaces to the controls system and shall perform all functions necessary for operation. The unit shall have a galvanized steel finish. The BC Controller shall be completely factory assembled, piped and wired. Each unit shall be run tested at the factory. This unit shall be mounted indoors, with access and service clearance provided for each controller. The sum of connected capacity of all indoor air handlers shall range from 50% to 150% of rated capacity.

2. BC Unit Cabinet:

   a. The casing shall be fabricated of galvanized steel.
   b. Each cabinet shall house a liquid-gas separator and multiple refrigeration control valves.
   c. The unit shall house two tube-in-tube heat exchangers.

3. Refrigerant: R410A refrigerant shall be required.

4. Refrigerant valves:

   a. The unit shall be furnished with multiple branch circuits which can individually accommodate up to 54,000 BTUH and up to three indoor units. Branches may be twinned to allow more than 54,000 BTUH.
   b. Each branch shall have multiple two-position valves to control refrigerant flow.
   c. Service shut-off valves shall be field-provided/installed for each branch to allow service to any indoor unit without field interruption to overall system operation.
   d. Linear electronic expansion valves shall be used to control the variable refrigerant flow.

5. Condensate flow switch shall be provided to shut down the unit.

6. Electrical:

   a. The BC Controller shall be controlled by integral microprocessors.
   b. The control circuit between the indoor units and the outdoor unit shall be 24VDC completed using a 2-conductor, twisted pair shielded cable to provide total integration of the system.

D. 4-Way Ceiling-Recessed Cassette with Grille Indoor Unit:

1. General: The unit shall be a four-way cassette style indoor unit that recesses into the ceiling with a ceiling grille. The indoor unit shall be factory assembled, wired and run tested. Contained within the unit shall be all factory wiring, piping, electronic modulating linear expansion device, control circuit board and fan motor. The unit shall have a self-diagnostic function, 3-minute time delay mechanism, an auto restart function, an emergency operation function, a test run switch, and the ability to adjust airflow patterns for different ceiling heights. Indoor unit and refrigerant pipes shall be charged with dehydrated air before shipment from the factory.

2. Unit Cabinet:

   a. The cabinet shall be space-saving ceiling-recessed cassette.
   b. The cabinet panel shall have provisions for a field installed filtered outside air intake.
   c. Branch ducting shall be allowed from cabinet.
   d. Four-way grille shall be fixed to bottom of cabinet allowing two, three or four-way blow.
   e. The grille vane angles shall be individually adjustable from the wired remote controller to customize the airflow pattern for the conditioned space

3. Fan:

   a. The indoor fan shall be an assembly with a turbo fan direct driven by a single motor.
   b. The indoor fan shall be statically and dynamically balanced to run on a motor with permanently lubricated bearings.
   c. The indoor fan shall consist of five (5) speed settings, Low, Mid1, Mid2, High and Auto.
   d. The fan shall have a selectable Auto fan setting that will adjust the fan speed based on the difference between controller set-point and space temperature.
   e. The indoor unit shall have an adjustable air outlet system offering 4-way airflow, 3-way airflow, or 2-way airflow.

f. The indoor unit shall have switches that can be set to provide optimum airflow based on ceiling height and number of outlets used.
g. The indoor unit vanes shall have 5 fixed positions and a swing feature that shall be capable of automatically swinging the vanes up and down for uniform air distribution.
h. The vanes shall have an Auto-Wave selectable option in the heating mode that shall randomly cycle the vanes up and down to evenly heat the space.

4. Filter: Return air shall be filtered by means of a long-life washable filter.

5. Coil:

a. The indoor coil shall be of nonferrous construction with smooth plate fins on copper tubing.
b. The tubing shall have inner grooves for high efficiency heat exchange.
c. All tube joints shall be brazed with phos-copper or silver alloy.
d. The coils shall be pressure tested at the factory.
e. A condensate pan and drain shall be provided under the coil.
f. The unit shall be provided with an integral condensate lift mechanism that will be able to raise drain water 33 inches above the condensate pan.
g. Both refrigerant lines to the indoor units shall be insulated.

6. Controls: This unit shall use controls provided by MITSUBISHI ELECTRIC to perform functions necessary to operate the system.

E. 1-Way Ceiling-Recessed Cassette with Grille Indoor Unit:

1. General: The unit shall be a one-way cassette indoor unit that recesses into the ceiling with a ceiling grille and shall have a modulating linear expansion device. The unit shall be used with the R2-Series outdoor unit and BC Controller. The unit shall support individual control using DDC controllers.

2. Indoor Unit: The indoor unit shall be factory assembled, wired and run tested. Contained within the unit shall be all factory wiring, piping, electronic modulating linear expansion device, control circuit board and fan motor. The unit shall have a self-diagnostic function, 3-minute time delay mechanism, an auto restart function, an emergency operation function and a test run switch. Indoor unit and refrigerant pipes shall be charged with dehydrated air before shipment from the factory.

3. Unit Cabinet:

   a. The cabinet shall be space-saving ceiling recessed.
   b. The cabinet panel shall have provisions for a field installed filtered outside air intake.
   c. Branch ducting shall be allowed from cabinet.
   d. The one-way grille shall be fixed to bottom of cabinet allowing for one-way airflow.

4. Fan:

   a. The indoor fan shall be an assembly with one line-flow fan direct driven by a single motor.
   b. The indoor fan shall be statically and dynamically balanced to run on a motor with permanently lubricated bearings.
   c. The indoor fan shall consist of four (4) speeds, Low, Mid1, Mid2, and High.

5. Filter: Return air shall be filtered by means of a long-life washable permanent filter.

6. Coil:

   a. The indoor coil shall be of nonferrous construction with smooth plate fins on copper tubing.
   b. The tubing shall have inner grooves for high efficiency heat exchange.
   c. All tube joints shall be brazed with phos-copper or silver alloy.
   d. The coils shall be pressure tested at the factory.
   e. A condensate pan and drain shall be provided under the coil.
   f. The unit shall be provided with an integral condensate lift mechanism able to raise drain water 23 inches above the condensate pan.
   g. Both refrigerant lines to the indoor units shall be insulated.

7. Controls:

   a. This unit shall use controls provided by MITSUBISHI ELECTRIC to perform functions necessary to operate the system.

F. Controls:

1. General: The CITY MULTI Controls Network shall be capable of supporting remote controllers, schedule timers, system controllers, centralized controllers, an integrated web based interface, graphical user workstation, and system integration to existing Building Management Systems via Tridium Niagara integration. Model DC600E.

2. Electrical Characteristics:

   a. General: The controls network shall operate at 24VDC. Controller power and communications shall be via a common non-polar communications bus.

   b. Wiring:

      (1) Control wiring shall be installed in a system daisy chain configuration from indoor unit to remote controller to indoor unit, to the BC controller and to the outdoor unit. Control wiring to remote controllers shall be run from the indoor unit terminal block to the controller associated with that unit.
      (2) Control wiring for schedule timers, system controllers, and centralized controllers shall be installed in a daisy chain configuration from outdoor unit to outdoor unit, to system controllers, to the power supply.

   c. Wiring type:

      (1) Wiring shall be 2-conductor (16 AWG), twisted shielded pair, stranded wire, as defined by the Design Tool AutoCAD output.
      (2) Network wiring shall be CAT-5e with RJ-45 connection.
      (3) Entire network and controls wiring color shall be Light Green. (No substitutions)

3. Controls Network:

   a. The Controls Network consists of system controllers, centralized controllers, and integrated web based interface communicating over a high-speed communication bus. The Controls Network shall support operation monitoring, personal browsers, online maintenance support, and integration with Building DDC Systems using the Mitsubishi JACE platform DC600E.

   b. Smart ME Remote Controller :

      The Smart ME Remote Controller shall be capable of controlling up to 16 indoor units (defined as 1 group). The Smart ME Remote Controller shall be approximately 5.5” x 5” in size and white in color with an auto-timeout touch screen LCD display. The Smart ME Remote Controller shall support a selection from multiple languages (English, Spanish or French) for display information. The Smart ME supports temperature display selection of Fahrenheit or Celsius. The Smart ME Remote Controller shall

control the following grouped operations: On/Off, Operation Mode (cool, heat, auto, dry, fan and setback, Simultaneous Heating and Cooling only), temperature set point, fan speed setting, and airflow direction setting. The Smart ME Remote Controller shall support timer settings of on/off/temperature up to 8 times in a day in 5-minute increments. The Smart ME Remote Controller shall support an Auto Off timer. The Smart ME Remote Controller shall be able to limit the set temperature range from the Smart ME Remote Controller, or via a PC through a licensed centralized controller. Also, the temperature range can be set from a touch screen panel. The room temperature shall be sensed at either the Smart ME Remote Controller or the Indoor Unit dependent on the indoor unit dipswitch setting. The Smart ME Remote Controller shall display a four-digit error code in the event of system abnormality or error.

The ME Remote Controller shall only be used in same group with other ME Remote Controllers with a maximum of two ME Remote Controllers per group.

The ME Remote Controller shall require manual addressing using rotary dial switch to the M-NET communication bus. The ME Remote Controller shall connect using two-wire, stranded, non-polar control wire to TB5 connection terminal on the indoor unit.

c. Centralized Controller (EB-50GU):

The Centralized Controller shall be capable of controlling a maximum of 50 indoor units across multiple outdoor units. The Centralized Controller shall be approximately 8-1/2”x10” in size and shall be powered from the external power supply. The Centralized Controllers and power supply shall be mounted inside an 18” x 18” NEMA 1 enclosure with hinged covered keyless latch. All four points of the Controllers hsall be secured inside the enclosure. The enclosure shall be secured to the wall at each inside corner. The Centralized Controller shall support system configuration, daily/weekly scheduling, monitoring of operation status, night setback settings, free contact interlock configuration and malfunction monitoring. The Centralized Controller shall have five basic operation controls which can be applied to an individual indoor unit, a group of indoor units (up to 50 indoor units), or all indoor units (collective batch operation). This basic set of operation controls for the Centralized Controller shall include on/off, operation mode selection (cool, heat, auto, dry, setback and fan), temperature setting, fan speed setting, and airflow direction setting. Since the centralized controller provides centralized control it shall be able

to enable or disable operation of local remote controllers. In terms of scheduling, the Centralized Controller shall allow the user to define both daily and weekly schedules with operations consisting of ON/OFF, mode selection, temperature setting, air flow (vane) direction, fan speed, and permit/prohibit of remote controllers.

All Centralized Controllers shall be equipped with one Ethernet port to support interconnection with a network PC via a closed/direct Local Area Network (LAN).The Centralized Controller shall be capable of performing initial settings via a PC using the Centralized Controller's initial setting browser. Mitsubishi group numbers shall be assigned beginning with alphabetically named spaces in order followed by spaces identified numerically in numerical order.

Standard software functions shall be available so that the building manager can securely log into each centralized controller via the PC's web browser to support operation monitoring, scheduling, error email, interlocking and online maintenance diagnostics. Standard software functions shall not expire.

4. Web-based User Interface:

   a. Licenses per function shall be required.
   b. PC-Monitoring: The communication network shall be capable of monitoring and operating all indoor units from a networked PC's web browser for up to 50 units per centralized controller.

5. Personal Web Browser: The communication network shall be capable of allowing up to 50 individual users to monitor and control user defined zones via a network PC web browser.

6. Online Maintenance Diagnostics: The communication network shall be capable of performing maintenance diagnostics via a network PC and centralized controller using Maintenance Tool Software.

7. System Integration shall be capable of supporting integration with Building DDC Systems.

   a. Tridium Niagara Mitsubishi JACE DC600E – one JACE shall be specified to interface with two EB-50 centralized controllers. Each JACE shall be fully licensed to perform any and all functions available. The JACE shall be installed below the two EB-50 centralized controllers inside the NEMA1 enclosure noted above.

2.5 TERMINAL EQUIPMENT

A. Electric Cabinet Unit Heaters (CUH):

1. Units shall be size, type, and have capacity indicated. Provide units manufactured by MARKEL, TRANE, or approved equal.

2. Cabinet: The cabinet shall be constructed of heavy-duty 16-gauge zinc-coated steel. The cabinet shall be finished with a durable powder coated beige paint. The front cover shall be removable for easy installation and service of all internal components. The grille configuration shall be convertible to any airflow configuration by removal of four fasteners. The cabinet shall be designed for ceiling mounting.

3. Elements: Elements shall be all steel tubes with highest quality nickel-chromium resistance wire embedded in compacted efficient dielectric to ensure proper heat transfer. Steel helical fins shall be machine crimped and brazed to tube for effective transfer of heat.

4. Motor and Blower Assembly: Motor and blower shall be direct drive and resiliently mounted on a rigid heavy-gauge steel frame for quiet operation and long life. All motors shall have built-in overload protection and shall be lifetime lubricated. The motor shall be vented and mounted in the airstream to provide maximum cooling of the motor.

5. Limit Controls: The heater shall utilize two safety limits built into the controls to automatically shut off the heater if safe operating temperatures are exceeded. The primary limit shall be a capillary type, which senses the heat along the full length of the elements. The secondary limit shall be a manual reset thermal device. All heaters shall have a built-in fan purge to dissipate residual heat from elements on heater shutdown.

6. Controls: Heater shall have high/low heat and fan rocker switch. These controls shall be factory wired and taper resistant and adjustable through from of louver assembly. Units shall have integral low voltage control interface.

7. Temperature Controls: Refer to Section 230900 “Automatic Temperature Controls”.

B. Electric Unit Heaters:

1. Units shall be size, type, and have capacity as indicated. MARKEL, TRANE, or approved equal.

2. Units shall be complete, including casing, electric coil, fan, fan guard, and motor. Units shall be horizontal discharge type with adjustable air deflectors. Provide integral factory-wired disconnect switch.

3. Temperature Controls: Refer to Section 230900 "Automatic Temperature Controls".

C. Electric Wall Heaters:

1. Units shall be size, type, and have capacity as indicated. MARKEL, TRANE, or approved equal.

2. Units shall be complete, including casing, 16-gauge steel bar grille, electric heating coil, fan, and permanently lubricated motor. Provide with built-in and factory-wired disconnect switch and integral thermostat.

3. Color of enclosure shall be selected by the Architect.

4. Temperature Controls: Refer to Section 230900 "Automatic Temperature Controls".

D. Electric Duct Heating Coil (EDC-1 and 2):

1. General: Provide enclosed element electric duct heaters with voltage, phase, wattage, duct size, and number of steps as indicated in schedule. Heaters shall be insert type, UL-Listed for zero clearance to combustible surfaces, and bear UL label. All heaters shall meet the requirements of the National Electrical Code. Provide control cabinet and element housing made of 18-gauge aluminized steel. Units shall be as manufactured by BRASCH or approved equal.

2. Element Construction: All elements shall be made of high quality alloy resistor wire, centered and permanently encased within highly compacted, rock-hard refractory materials, surrounded by steel sheath. Helical fins shall be brazed to the sheath for rapid heat transfer. Sheath and fins shall be permanently coated with a high temperature fired ceramic for corrosion

resistance. All element terminations shall be threaded stainless-steel type to ensure a positive connection to leads.

3. Control Cabinet: Control cabinet shall be constructed of 18-gauge aluminized steel. All cabinets shall have a solid cover of the same gauge, complete with a piano-type hinge on the longest dimension, tool-operated latch and pull ring.

4. Safety Controls: Primary over-temperature protection shall be provided by built-in capillary-type automatic reset thermal cutout. Capillary cutout shall be UL-Listed and of the fail-safe type. Secondary over-temperature protection shall consist of a sufficient number of capillary-type manual resets controlling back-up contactors. Capillary shall be of the fail-safe and trip-free type. Capillary manual reset shall be resettable without opening cover. All capillaries shall be installed in a protective aluminum sheath. Sheath shall be etched and painted flat black to sense any over-temperature condition the full length of heater face. Over-current protection incorporating fuses shall be provided for all heaters. Fuses shall be factory installed within the heater enclosure. Provide 3-pole phenolic fuse blocks for Class H or K fuses.

5. Wiring Diagrams: Provide a separate, complete and specific wiring diagram permanently attached to each heater. Typical wiring diagrams are not acceptable. Control and line terminals in each heater shall be marked to correspond to the wiring diagram.

6. Transformer: Provide heavy-duty machine-type control transformer with primary same voltage as specified for heater. Coordinate secondary voltage and transformer capacity with Automatic Temperature Control requirements.

7. Contactors: Provide definite purpose contactors with heavy-duty contacts and encapsulated coils. Contactors shall have 3 poles to break each phase of heater. No voltage shall be applied to heater when contactor is de-energized. Provide coil voltage to match control transformer secondary voltage. Provide minimum of one normally open and one normally closed auxiliary contact for each contactor.

8. Temperature Controls: Refer to Section 230900, “Automatic Temperature Controls.”

2.6 HVAC PIPING AND SPECIALTIES

A. Piping:

1. Condensate drain piping within building shall be Type L copper tubing assembled with wrought-copper soldering fittings using 95-5 solder. Condensate drain piping on roof shall be Schedule 40 PVC pipe and fittings.
2. Refrigerant piping shall be nitrogen-filled phosphorous deoxidized C1220 ACR tubing assembled with wrought-copper soldering fittings using silver solder.

3. Piping shall be run concealed, except where no ceiling is provided by the Architect. Coordinate installation of piping with other disciplines. Locate all piping tight against structure where possible. No piping shall be installed below mechanical equipment, or within mechanical equipment clearance requirements.

4. Pitch piping to vent at high points,

5. Provide accessible drains at low points.

2.7 AIR DISTRIBUTION

A. Ductwork

1. Provide all ducts, plenums, connections, dampers, and related items required to form a complete system as indicated on drawings and specified herein.

2. All ductwork shall be sheet metal.

3. Sheet-metal ducts shall be fabricated from G60 galvanized-steel sheets and shall be of gauges called for and as detailed in 2005 SMACNA Manual, HVAC Duct Construction Standards (Metal and Flexible). All constant volume ductwork shall be 1" w.g. pressure class construction and shall be single-wall or double-wall rectangular or round as indicated.

4. Duct sealing requirements shall be Class B for all ductwork.

5. Round ductwork for exposed application shall be in accordance with SMACNA 2005 standards for low pressure duct application. Duct shall be double-wall, spiral, lockseam construction. Where rectangular take-offs for registers are shown, a tack-welded factory- installed take-off shall be provided. Exposed duct shall have “paint grip” finish suitable

for field painting. Exposed ductwork shall be "Architectural" grade and shall receive special care in construction and shipping.

6. Double-wall round ductwork shall be used where indicated. Round duct used indoors shall be of spiral lockseam construction with an airtight outer pressure shell, a 2" thick insulation layer, and a solid inner liner that completely covers the insulation throughout. Fittings to have solid inner liner. Rectangular ductwork used outdoors shall have 3" thick insulation.

7. Round fittings may be spot welded and bonded.

8. Insulation for double-wall ductwork shall have the following UL rating:

Flame Spread	10-20
Fuel Contributed	10-15
Smoke Developed	0-20

9. Round spiral duct and fittings shall be UNITED MCGILL CORPORATION, or equal by SEMCO MANUFACTURING or EASTERN SHEET METAL. Round duct and fittings may also be supplied by LINDAB, INC.

10. Round ductwork shall not be delivered to the job site until just prior to erection. Ductwork with dents or other damages shall not be accepted. Double-wall acoustically-lined ductwork shall be removed from the job site and shall not be used if liner is allowed to become wet to any degree.

11. Rectangular low velocity ductwork shall be constructed from galvanized steel sheets of lock form quality per ASTM A653 with a G60 zinc coating (0.60 oz/ft^2), unless otherwise shown on the contract documents. Sheets shall be free of pits, blisters, slivers, and un-galvanized spots.

12. Insulated-flexible acoustical air ducts shall be FLEXMASTER USA TYPE 1M, THERMAFLEX Type M-KE, or approved equal, suitable for up to 10" w.g. positive pressure and rated velocity of 5500 FPM. Flexible ductwork shall meet NFPA 90A standards, conform to UL standard 181, and be ETL listed Class 1 air duct. Flexible duct shall have a flame spread of less than 25 and smoke developed of less than 50. Flexible ductwork shall be fabricated with a polyethylene or chlorinated polyethylene inner film, wrapped in 2" thick with a thermal conductance of R-6 fiberglass insulation, with an outer reinforced metallized vapor barrier. The inner film shall be supported by a corrosion resistant galvanized steel helix formed and mechanically locked to the polyethylene fabric. The inside bend radius shall be ½ x inside diameter in all sizes. Flexible branch ductwork to diffusers shall be limited to maximum length of 5 feet long

and maximum velocity of 600 feet per minute. Flexible duct connections at variable air volume terminals shall be a maximum of 3 feet long. Contractor to provide proper flex duct size to ensure velocity limit is not exceeded. Support flexible ducts a minimum of every 4 feet. Supports shall not compress or constrict the flexible duct. Refer to the diffuser installation details on the drawings.

13. Provide flexible connections of fiberglass between ducts and air-handling unit connections, fan powered VAV boxes, fan coil units, and exhaust fans. Connector shall be constructed using double lock gripping fingers at metal to fabric contact. Connector shall be rated airtight and watertight up to 10" w.g. positive to 10" w.g. negative pressure. Provide flexible connections, not less than 4 inches wide, constructed of approved fireproof, waterproof, non-asbestos, glass fabric, at the inlet and outlet connection of each fan unit, securely fastened to the unit and to the ductwork by a 24 gauge galvanized steel band provided with tightening screws. There shall be no metal-to-metal contact at flexible connections. There shall be no stretching of the flexible material at flexible connections. The connection shall be UL listed, to meet NFPA 90A and 90B requirements and the following applications:
Indoor: Neoprene coated glass fabric, minimum 30 oz./sq.yd., DUCTMATE "PROFLES™" or approved equal.
Outdoor: U.V. resistant Hypalon coated glass fabric, minimum 24 oz./sq.yd. DUCTMATE "PROflex™" or approved equal.

14. Space roof mounted duct supports and suspended duct hangers every 4 feet, maximum. Insulated duct shall have saddle hangers. Suspended duct hangers attached to the side of the ductwork are acceptable. Refer to duct support details on the drawings.

15. Fabricate ductwork with airtight joints, presenting smooth surface on inside, neatly finished on outside; construct with curves and bends to aid in easy flow of air. Unless otherwise indicated, make inside radius of curves and bends at least width of ducts. Where square elbows have to be used, provide double wall turning vanes in all low-velocity square elbows. Where fixed deflecting vanes are indicated, provide double wall blades, fit into side rails, and screw or rivet to duct elbow in field. Blades and side strips shall be small or large double vanes as detailed in SMACNA Duct Manual. DUCTMATE "PROrail™" or approved equal.

16. Construct, brace, and support ducts and air chambers in a manner that they will neither sag nor vibrate to any perceptible extent when fans are operating at maximum speed or capacity.

17. Provide sandwich type or square framed access doors for service temperature and pressure required, where indicated and where not

indicated, in locations and of sizes which will afford easy access to multi-blade dampers, smoke detectors, fire dampers, and other equipment and devices requiring inspection and servicing. Access doors shall be installed to avoid lights, piping, conduit, ceiling grid, etc., to provide unobstructed access. Access doors shall be installed on the underside of the ductwork. Access doors shall be a minimum of 24" x 18" where possible. Access doors in all factory fabricated ductwork shall be factory installed and sizes and locations shall be identified on the ductwork shop drawing submittal. In non-accessible ceilings, provide access doors in ceiling. DUCTMATE or approved equal.

18. Connect ductwork to intake and discharge louvers, dampers, and other work installed in various trades requiring sheet-metal connections.

19. Make sheet-metal connections to masonry work airtight and watertight in approved manner.

20. Provide opposed-blade dampers for control of air volume and for balancing system, where indicated or required. Dampers shall be of sheet metal at least one gauge heavier than duct and reinforced; shall be installed in an accessible location. Provide indicating quadrant and locking device for adjusting and locking dampers in position. Provide extended shafts on all volume dampers greater than the thickness of the insulation to provide free movement of damper positioner. Stiffen duct at damper location, install damper in manner to prevent rattling.

21. Provide square to round transition fittings with balancing damper at all round-duct take-offs to supply diffusers and registers.

22. Provide access doors in building walls and ceilings where damper quadrants are concealed in shafts or above non-accessible ceilings.

23. Provide suitably constructed fire dampers where indicated and where required by NFPA 90A or by local ordinance or by Virginia State Fire Marshal. All fire dampers must be “drop tested” in the presence of a representative of York County Building Inspection Department.

    a. Fire dampers shall be fusible link actuated, constructed and installed per details in NFPA 90A, and shall be UL labeled. Fire dampers shall provide 100% free area with no restrictions in the airstream. Dampers shall be suitable for horizontal or vertical mountings. All fire dampers must be inspected during installation by a representative of York County Building Inspection Department.
    b. Fire dampers shall be dynamic curtain type or multi-blade type fusible link actuated, constructed and installed per details in NFPA 90A, and shall be UL 555 rated. Dampers shall be tested to

close under airflow and rated for use in HVAC systems that are operational in the event of a fire emergency. Dampers shall be tested to all six UL 555 test configurations and shall be mounted either vertically or horizontally with airflow in either direction. Fire dampers shall provide 100% free area with no restrictions in the airstream. Dampers shall be constructed of galvanized or 304 stainless steel.

24. Duct sizes are inside free area. Increase duct sizes as required.

25. Ductwork and accessories shall not be delivered to the job site until just prior to erection and must be stored in an approved manner.

26. All ductwork shall be internally cleaned by vacuuming prior to installation.

27. All ductwork open ends shall be sealed with polyethylene and duct tape during construction after hanging.

B. Exhaust Hood:

1. Provide size indicated, Model FGR as manufactured by GREENHECK, or approved equal.

2. Gravity roof relief ventilators shall be constructed of heavy gauge aluminum. Hoods shall be constructed of precision formed, arched panels with interlocking seams. Bases shall be constructed so that the curb cap is 6 in. larger that the throat size. Base height shall be 12 in.. Hood support members shall be constructed of galvanized steel and fastened so that the hood can be either removed completely from the base or hinged open.

3. Birdscreens constructed of 0.5 in. galvanized steel mesh shall be mounted horizontally across the discharge area of the hood.

C. Roof Curbs:

1. Provide 18-gauge galvanized roof curbs for all power roof ventilators, outside air intake hoods, and exhaust hoods. Curbs shall be insulated with wood nailers and be 12" in height. Curbs shall be constructed to match the slope of the roof where installed. Roof curb for kitchen exhaust fan shall be sufficient height to raise fan outlet to 48 inches above the roof.

D. Equipment Rails:

1. Provide 18-gauge galvanized equipment rail with unitized construction with integral base plate, continuous welded corner seams, pressure

treated wood nailer, counterflashing with stainless steel screws. Rail shall be internally reinforced to conform with the manufacturer's load bearing factors. Rails shall be as manufactured by THE PATE COMPANY, Model ES-5 or approved equal.

E. Back-Draft Dampers:

1. Duct-mounted back-draft dampers shall be RUSKIN Model BD6, or approved equal.

F. Grilles, Registers and Diffusers:

1. Refer to drawings for types, material, models, finishes as manufactured by PRICE, TITUS, METALAIR, No substitutions. Air devices shall have performance characteristics (throw, noise, and pressure drop) equal to air devices scheduled on the drawings. This information shall be provided with the submittal.
2. Grille and register frames and louvers shall be one-piece construction.
3. Paint interior surfaces of ducts behind grilles and registers with flat black enamel.

2.8 VIBRATION ISOLATION

A. Vibration Isolators:

1. Mechanical equipment indicated below shall be isolated from the structure by resilient vibration and noise isolations. Equipment to be isolated includes, but is not limited to, the following: Rooftop Air Conditioning Units (RTU's and RVU's), horizontal cabinet unit heaters, and Condensing Units (OU's).

a. Vibration Isolation System (RTUs and RVUs):

(1) Rooftop units indicated shall be mounted on vibration isolation rails, and shall have sound barrier material installed throughout the area of the roof curb under the units. Rails shall be Model KSR-2 Isolation Rail System manufactured by KINETICS, or Model CMAB Isolation Rail Systems as manufactured by MASON INDUSTRIES approved equal. System shall consist of two parallel aluminum rails with continuous neoprene air and water seal, incorporating steel spring isolators designed for 2" static deflection, all designed to be installed over the roof curb system furnished with each air-handling unit.

(2) Provide a minimum of three Type H vibration isolation hangers supports or guides for all ductwork connected to

equipment that has been vibration isolated. Minimum deflection shall be 1".

(3) Deflection for hangers and supports shall be equal to that of isolated equipment but in no case greater than 1-1/2" nor less than 1/4". Minimum deflection shall be 1".

B. Sound Isolation

1. RTU Acoustical Systems: (RTUs and RVUs) Acoustical material inside the roof curb as shown on the drawings shall be furnished by the isolation curb manufacturer, and consist of the following:

a. Model RIM-RT shall consist of high-density, molded fiberglass pads individually coated with a flexible elastomeric membrane. Isolation pads shall be 2" thick and be spaced as recommended by the manufacturer but not greater than 16" centerline spacing. Pads shall be manufactured from annealed glass fibers stabilized by pre-compression during manufacture. Pads shall be designed to safely withstand a minimum imposed load of 200 psf in all open areas and shall have a minimum overload capacity of 100% in all high load areas. Pads shall have satisfactorily passed WMATA Section 3.49 dynamic test for isolator permanence.

b. 1-1/2" thick low-density, fiberglass absorption material shall be bonded to the isolation pads, and shall cover a minimum of 95% of the area between the isolation pads.

c. The isolation system shall have been tested for acoustical performance by an independent testing laboratory, and the rating shall exceed STC 72 and IIC 70. Dynamic natural frequency of the isolators shall be 16 Hz or lower, and shall remain constant within 2 Hz over the entire load range of the floor system.

C. Ceiling mounted cabinet unit heaters shall be suspended with vibration spring isolators, KINETICS Model ARS or approved equal.

2.9 MEASUREMENT AND CONTROL (Not used)

PART 3 - EXECUTION

3.1 TESTS

A. The Owner shall be represented at all tests. Contractor shall provide 48 hours notice to the Owner prior to the tests.

B. Refrigerant piping shall be tested with dry nitrogen and trace of refrigerant at test pressures recommended by equipment manufacturer. After system has been proven tight under test pressure, it shall be evacuated to a pressure 2.5mm Hg absolute. The refrigerant compressor shall not be used for evacuation of the system. Vacuum shall be checked by use of a mercury manometer.

C. Start-up assistance will be provided to the installing contractor by factory certified personnel. The following information will be gathered by the installing contractor:

a. Equipment run time data will be collected with equipment running various modes.
b. All dip switch settings and positions will be recorded.
c. Serial numbers of all units will be recorded.
d. Pressure Test and vacuum information will be recorded.

D. Controls integration assistance will be provided by Mitsubishi factory certified personnel.

E. Refer to Specification Section 230593, “Testing, Adjusting, and Balancing,” for related requirements.

END OF SECTION 230500

SECTION 230593 - TESTING, ADJUSTING, AND BALANCING (TAB)

PART 1 - GENERAL

1.1 RELATED DOCUMENTS

A. Drawings and general provisions of the Contract, including General and Supplementary Conditions, Division 1 Specification Sections, and Section 230100, "Mechanical General Provisions," apply to this Section.

1.2 SCOPE OF WORK

A. The General Contractor shall obtain the services of an independent testing and balancing agency whose business is limited to testing, adjusting, and balancing and shall be certified by AABC (or NEBB). Agency shall have been in the TAB business for a minimum of 5 years. The TAB (Testing, Adjusting, and Balancing) Agency shall be a direct subcontractor of the General Contractor, and not affiliated in any way with the Mechanical Contractor.

B. Testing and balancing shall be performed in accordance with National Standards for Testing and Balancing Heating, Ventilating, and Air-conditioning Systems, 2002, as published by Associated Air Balance Council (AABC).

C. All work shall be performed under the direct supervision of a certified TAB Engineer. All other personnel shall be regular full-time employees of the TAB Agency.

D. Test and Balance Agency shall submit within 30 days after receipt of construction contract two copies of qualifications, including current TAB Engineer's certificate and National Project Certification Performance Guaranty.

E. TAB work shall not commence until all components of the HVAC system have been installed completely, including all power wiring and controls, and all equipment has been started and run tested in each mode of operation. Should any items be found incomplete at the time that TAB work is performed, the TAB Agency shall immediately notify the General Contractor and Owner's Representative of any deficiencies found. The General Contractor shall be responsible for correcting reported deficiencies and verifying that the system is 100% complete, operable, and ready for TAB work to proceed.

PART 2 - PRODUCTS

2.1 MATERIAL AND EQUIPMENT

A. Provide all necessary instrumentation required to measure and adjust the HVAC air and water systems.

B. Equipment and instruments shall be of types approved by the Owner's Representative, and/or manufacturers of devices installed.

C. Instruments used for testing and balancing of air and hydronic systems shall have calibration verified within a period of 12 months prior to balancing.

PART 3 - EXECUTION

3.1 GENERAL, MECHANICAL, AND ELECTRICAL CONTRACTOR'S RESPONSIBILITY

A. The General Contractor shall be responsible for directing the Mechanical and Electrical Contractors to fulfill the Contractors' Responsibility for Testing, Adjusting, and Balancing as required in Section 230100. TAB work shall not commence until the conditions of paragraph 1.2.E of this Section and all requirements of Section 230100 for TAB have been completed.

3.2 TAB AGENCY'S RESPONSIBILITY

A. Carefully review the drawings and Specifications for the various systems noting all facilities incorporated in the design for purposes of adjusting and balancing. Should it be deemed necessary to provide additional dampers, baffles, valves, or other devices which would aid in the required adjusting and balancing, same shall be provided by the installing contractor.

B. The TAB Agency shall report any and all deficiencies that prohibit adjusting and balancing in accordance with the Contract Documents to the Contractor and the Owner's Representative.

C. Adjust all water piping, duct, and equipment, including valves, controls, dampers, cocks, etc., to properly perform to ±10% of their respective design quantities of flow.

D. The Test and Balance Agency shall perform the following:

1. Adjust fan RPM, tighten and align fan belts, measure operating amps.

2. Adjust volume dampers to obtain designed air volume.

3. Adjust grilles, diffusers, and registers to obtain designed airflow and air pattern.

4. Adjust each air handler to obtain designed airflow.

5. Adjust dampers to provide design outside air quantities.

6. In cooperation with the ATC Contractor's representative, setting adjustments of automatically controlled dampers to operate as specified. The TAB Agency shall inform ATC Contractor of all abnormalities in sequencing and/or calibration of components discovered during balancing.

7. Final settings of dampers and valves shall be permanently marked. Where provided, memory stops and locking devices shall be adjusted and locked to the final setting.

E. Before the work is offered for Final Acceptance, all equipment shall be run through a test to demonstrate that it has been adjusted to meet the requirements of the drawings and Specifications. Copies of the test and adjustment data shall be submitted in a report to the Owner's Representative prior to final inspection.

F. The TAB Report shall include a General Comments section providing an overview of systems operation, observations of system installation abnormalities and deficiencies, problems encountered, etc. If required, provide explanation of methods of measurement and disparity between measured and design quantities.

G. Test and Balance Agency Report shall include the following data for each system. All sheets shall be neatly typed. Balancing Agency shall submit with his report a set of neatly marked plans identifying location of each piece of equipment, air terminal, flow measuring device, and points of traverse. Report all measured quantities and design quantities where applicable.

1. CFM of each supply, return, exhaust grille, and diffuser.

2. RPM and CFM of each fan.

3. Supply, return, and outdoor air CFM of each AHU and fan terminal unit where required.

4. Air pressure drop across A/C unit cooling coils.

5. Air pressure drop across each filter bank.

6. Discharge and suction static pressure of each fan.

7. Voltage rating and operating volts of each fan motor. For fan motors requiring three-phase power, record voltage of each individual phased leg and check for voltage imbalance.

8. Temperatures for each air handling unit at maximum capacity including the following measurements:

   a. Entering and Leaving air temperature at each coil.
   b. Entering and Leaving air temperatures at each energy recovery wheel on supply and exhaust side of wheel.

9. Air handling unit is defined as any equipment that consists of a fan and coil, including rooftop units.

10. Nameplate data of each piece of HVAC equipment installed.

11. Velocity across each duct smoke detector at full airflow.

H. During the Final Inspection, the Agency shall have present all necessary instrumentation and an individual to make readings of select information which was submitted in the balance report. The select readings shall be made where directed by and in the presence of the Owner's Representative and shall not deviate more than 5% from the values submitted in the report.

I. The Owner's Representative may select no more than 20% of all reported data for rechecking. If more than 20% of data verified is not within ±5% of submitted data, the Owner's Representative may void entire report and ask for complete rebalancing. The field check shall be made within 45 days of approved TAB submittal.

END OF SECTION 230593

SECTION 230700 - MECHANICAL INSULATION

PART 1 - GENERAL

1.1 RELATED DOCUMENTS

A. Drawings and general provisions of the Contract, including General and Supplementary Conditions, Division 1 Specification Sections, and Section 230100, "Mechanical General Provisions," apply to this Section.

1.2 SUBMITTALS

A. Submit manufacturers' data on all insulation products, schedule which indicates where each product is to be used, and thickness of each product.

1.3 WARRANTY-GUARANTEE

A. Contractor shall furnish written warranty, countersigned and guaranteed by the General Contractor, stating that work executed under this Section of the Specifications shall be free from defects of materials and workmanship for a period of 12 months from date of Substantial Completion.

PART 2 - PRODUCTS

2.1 INSULATION - GENERAL

A. All insulation shall have a composite (insulation, jacket or facing, and adhesive used to adhere the facing or jacket to the insulation) fire and smoke rating as requested by ASTM E84, NFPA 255, and UL 723, not exceeding:

Flame spread	25
Smoke developed	50

B. Accessories, such as adhesive, mastics, cements, tapes, and fire-resistant cloth for fittings, shall have same fire and smoke ratings as components listed above.

C. Installation of insulation shall be accomplished in strict accordance with manufacturer's recommendations and shall be CERTAINTEED, OWENS-CORNING, or JOHNS MANVILLE for glass fiber insulation; ARMACELL for flexible unicellular insulation.

2.2 PIPE INSULATION

A. Glass fiber insulation having a thermal conductivity not greater than 0.24 Btu x in./hr. x sq. ft. x °F in a mean temperature of 75°F. Insulation shall have factory-applied all-purpose jacket.

B. Flexible unicellular insulation having a thermal conductivity not greater than 0.27 Btu x in./hr. x sq. ft. x °F in a mean temperature of 75°F.

2.3 DUCT INSULATION

A. Blanket Type within the conditioned space: Glass fiber, ¾-lbs/cu. ft., foil faced, vapor-sealed flexible duct insulation. Thermal conductivity shall not exceed 0.29 Btu x in./hr. x sq. ft. x ºF.

B. Board Type within the conditioned space: Glass fiber, 3.0-lbs./cu. ft., foil faced, vapor-sealed board insulation. Thermal conductivity shall not exceed 0.23 Btu x in./hr. x sq. ft. x ºF.

2.4 DUCT LINER

A. 2" thickness glass fiber insulation as manufactured by JOHNS MANVILLE, LINACOUSTIC RC™. Insulation shall conform to the physical properties and requirements of ASTM C1071. Insulation shall be installed in strict accordance with the manufacturer's instructions.

1. Glass fiber, 3.0-lbs./cu.ft., insulation having a thermal conductivity not greater than 0.24 Btu x in./hr. x sq. ft. x ºF at a mean temperature of 75ºF. Insulation shall be factory applied. Insulation shall have a composite fire and smoke rating as required by ASTM E84, UL 723, and NFPA 255, not exceeding 25 flame spread and 50 smoke developed.
2. Insulation shall be coated with an EPA-registered immobilized anti-microbial agent which shall effectively resist the growth of bacteria and fungi as proven by tests in accordance with ASTM G21 and G22. Insulation shall be rated for a maximum air velocity of 5,000 fpm when tested per UL 181, Section 17, with no fiber shedding. Edge coating shall be accomplished using Permacote SuperSeal and shall meet all the performance requirements of the insulation.

2.5 INSULATED DUCT COATING

A. Provide insulated duct coating on all exterior galvanized sheet metal ductwork, POLAR SEAL, ASTEC, or approved equal.

1. Water based acrylic plastic primer "prime security" shall provide 100% adhesion to substrate, stop oil migration, and set base for waterproof membrane "top security."
2. Water-based acrylic plastic waterproof membrane "top security" with bright white reflective heat shield consisting of a high concentrate of titanium dioxide to reflect ultraviolet rays.
3. Membrane "top security" shall be non-chalking, mildew and fungus resistant, and crack resistant.
4. Membrane "top security" shall be capable of withstanding sub-zero and extreme heat conditions without degradation. Membrane shall not shrink or become brittle because of age. Membrane shall be resistant to environmental pollution and other chemicals, such as ammonia, chlorine, insecticides, herbicides, and other common airborne chemicals.

2.6 CALCIUM SILICATE PIPE INSULATION INSERTS

A. Calcium silicate meeting ASTM C533, Type I; rigid molded pipe; asbestos-free JOHNS MANVILLE Thermo-12/Gold, or approved equal.

B. Thermal conductivity of 0.45 Btu at 300°F mean temperature as tested in accordance with ASTM C335.

C. Minimum compressive strength of 100 psi to produce 5% compression at 1-1/2" thickness.

D. Non-combustible as determined by test complying with ASTM E136.

E. Inserts shall have sufficient compressive strength to adequately support the pipe without compressing the inserts to a thickness less than the adjacent insulation. Insulation inserts shall cover the bottom half of the pipe circumference 180 degrees and be not less in length than the protection shield. Vapor-barrier facing of the insert shall be of the same material as the facing on the adjacent insulation.

2.7 PVC PIPE JACKET FITTING COVERS

A. One-piece molded-type PVC plastic fitting covers and jacketing material, color matching JOHNS MANVILLE Zeston 2000, or approved equal.

B. Connections shall be made using pressure-sensitive color matching vinyl tape.

PART 3 - EXECUTION

3.1 INSTALLATION

A. Insulation shall be installed by a licensed applicator and in strict accordance with the manufacturer's instructions. Deliver all materials to the job site and store in a safe, dry place. Use all means necessary at the job site to protect materials from dust, dirt, moisture, and physical abuse before and during installation. Insulation that becomes damaged prior to installation shall not be installed and shall be removed from the job site. Insulation that becomes wet or damaged after installation shall be removed and disposed of and replaced with new insulation.

B. Surfaces to be insulated shall be cleaned free of dirt, scale, moisture, oil, and grease prior to installation of the insulation.

C. Open ends of internally lined ducts shall be sealed using 6-mil plastic sheeting and attached using duct tape around the entire perimeter of the opening.

3.2 PIPING (GLASS FIBER INSULATION, UNLESS OTHERWISE NOTED)

A. Schedule:

Condensate Drain Above Floor:	1/2" thickness
Domestic Hot, Cold Water and Hot Water Circulating:	1/2" thickness for pipe sizes up to 1-1/4", and 1" thickness for pipe sizes over 1-1/2".
Variable Refrigerant Flow Liquid and Gas Lines	1/2" thickness flexible unicellular

B. Fittings and valves on insulated piping smaller than 4" shall be insulated with fiberglass blanket to thickness equal to adjoining pipe insulation unless otherwise noted.

C. All valves and piping accessories above ceilings handling cold water or refrigerant shall be completely insulated to prevent condensation.

D. Fittings and valves on refrigerant piping shall be insulated with cut sections of flexible unicellular insulation of thickness equal to adjoining pipe insulation.

E. Provide pipe inserts between pipe hanger support shields and on piping 1-1/2" diameter or larger. Insulation inserts shall not be less in length than the following:

1-1/2" to 2-1/2" pipe size	10" long
3" to 6" pipe size	12" long

F. Hangers and supports for cold water or refrigerant piping shall not injure or pierce insulation.

3.3 DUCTWORK

A. Definitions:

1. Concealed: Ductwork which shall be hidden from view by ceilings, walls, chases, or soffits, either by the work of this Contract, or by future tenant build-out work.
2. Exposed: Ductwork which is permanently in view, typically found in mechanical, storage, electrical, or other unfinished space.

B. Schedule:

Concealed Supply and Return Externally Insulated	2" thickness blanket
Exposed Supply and Return,	2" thickness rigid board
Plenums:	2" thickness
Transfer Ducts:	1" thickness liner
Exhaust Ducts:	Not Required
Factory Insulated Casings And Plenums:	Not Required
Factory Insulated Double Wall Ductwork:	Not Required

C. All ductwork (supply, returned exhaust) connected to RVU-3 and RVU-4 shall be insulated.

D. Where indicated on drawings, internally line ductwork with 2" thickness acoustic duct liner.

E. Insulate necks and tops of all supply air diffusers, registers, and grilles.

F. External insulation is not required for internally lined ducts.

G. Blanket-type insulation shall be stapled in accordance with manufacturer's instructions

H. Insulation on ductwork over 16" in height or width must be attached with stick pins. When using self-adhesive pins, prepare surface to be applied to ensure adhesion.

I. Tape all edges of insulation to ensure that no insulation is exposed.

3.4 INSULATED DUCT COATING

A. Clean galvanized outer surface of sheet metal ductwork as recommended by the manufacturer of the duct coating.

B. Apply POLAR SEAL "prime security" over all exposed ductwork at a rate of 100 square feet per gallon. Use polyester scrim over any joints or open areas. Completely saturate scrim in the first coat of "prime security."

C. After first coat is dry (dries from milky white when wet to clear opaque when dry), apply second coat of "prime security" at a rate of 100 square feet per gallon and let dry.

D. Apply POLAR SEAL "top security" at a rate of 100 square feet per gallon and allow to dry.

E. After first coat is dry, apply a second coat of POLAR SEAL "top security" at a rate of 100 square feet per gallon.

END OF SECTION 230700

SECTION 230900 – AUTOMATIC TEMPERATURE CONTROLS

PART 1 - GENERAL

1.1 RELATED DOCUMENTS

a. DRAWINGS AND GENERAL PROVISIONS OF THE CONTRACT, INCLUDING GENERAL AND SUPPLEMENTARY CONDITIONS, DIVISION 1 SPECIFICATION SECTIONS, AND SECTION 230100, "MECHANICAL GENERAL PROVISIONS," APPLY TO THIS SECTION.

1.2 SUMMARY

A. Section includes automation control equipment and software.

1.3 REFERENCES

A. American National Standards Institute

1. ANSI MC85.1: Terminology for Automatic Control

1.4 SYSTEM DESCRIPTION

A. A fully integrated building automation system, incorporating direct digital control (DDC) for energy management, equipment monitoring and control.

B. A peer-to-peer network of DDC controllers depicts each mechanical system and building floor plan by a point-and-click graphic. An existing server based interface shall gather data from the Trend branded JACE. Operators shall be able to perform any and all administrative functions through the existing Tridium Niagara platform.

D. Provide DDC controls for, rooftop air handlers, terminal units, and electric unit heaters and exhaust fans.

E. Where specified, provide control systems consisting of thermostats, control valves, damper operators, indicating devices, interface equipment and other apparatus and accessories to operate mechanical systems and to perform functions specified.

F. Provide installation and calibration, supervision, adjustments and fine tuning necessary for complete and fully operational DDC system.

1.5 SUBMITTALS

A. Section 013300 "Submittals" .

1.6 QUALIFICATIONS

A. Manufacturer: Company specializing in manufacturing products specified in this section with a minimum of ten years global experience and with technology center within 120 miles of this project.

B. Installer: Company specializing in performing work of this section with a minimum five years documented HVAC experience, trained, certified and approved by manufacturer.

C. Installation, products and materials shall be provided by BAY ELECTRIC CO., INC. (NO SUBSTITIONS).

1.7 PRE-INSTALLATION MEETINGS

A. Section 013100: Project Management and Coordination: Pre-installation meetings.

1.8 RELATED WORK IN OTHER SECTIONS

A. Refer to Division 00 and Division 01 for related contractual requirements.

B. Refer to Division 23 for General Mechanical Provisions.

C. Refer to Division 26 for General Electrical Provisions.

1.9 WARRANTY

A. Execution Requirements: Requirements for warranties.

1. Installer shall provide a standard one year warranty on all control products and labor associated with this project.

2. Installer shall provide five year warranty on all motorized valves and damper operators.

3. Installer shall provide a three year warranty on all variable speed drives associated with this project.

1.10 SERVICE

A. Execution Requirements: Requirements for service.

B. Furnish service and maintenance of control systems for one year from date of substantial completion. Include complete service of control systems including

callbacks. Make a minimum of two complete normal inspections of four hours duration in addition to normal service calls to inspect, calibrate and adjust controls.

C. Perform work without removing units from service during normal building occupied hours.

D. Provide emergency call back service at all hours for this maintenance period.

E. Maintain at local branch office, adequate levels of replacement parts in stock for emergency purposes. Have personnel available to ensure fulfillment of this maintenance service, without reasonable loss of time.

F. Perform maintenance work using competent and qualified personnel under supervision and in direct employ of manufacturer or original installer.

PART 2 PRODUCTS

2.1 DIRECT DIGITAL CONTROLS

A. Acceptable manufacturers:

1. Controllers:

a. TREND

2. Valves & Actuators:

a. BELIMO
b. HONEYWELL

3. Sensors:

a. ACI
b. HONEYWELL
c. JOHNSON
d. KELE
e. TREND
f. VERIS

4. Relays & Current Switches:

a. FUNCTIONAL DEVICES

2.2 MATERIALS

A. Use new products the manufacturer is currently manufacturing and selling for use in new installations. Do not use this installation as a product test site unless explicitly approved in writing by Owner. Spare parts shall be available for at least five years after completion of this contract.

B. A single manufacturer shall to the greatest extent possible, manufacture system components.

2.3 COMMUNICATION

A. Control products, communication media, hubs, and routers shall comprise a unified control network. Acceptable network mediums are Cat 5 Ethernet or twisted pair networks.

B. Use existing TCP/IP Ethernet backbone for network segments to all DDC Building Controller panels marked on project drawings. Project drawings indicate remote buildings or sites to be connected via intranet or Internet connections. In each remote location an intranet or Internet connection shall be provided for connection to the building automation system (BAS).

C. Connection to BAS shall be by connecting to any Ethernet port in the facility for temporary connection to a laptop computer. Connection shall support commissioning and troubleshooting operations.

D. System shall automatically synchronize controller time clocks daily from an operator-designated controller via the network. If applicable, system shall automatically adjust for daylight saving and standard time.

E. System shall communicate in a peer-to-peer way and check for system errors and verify controller communications.

2.4 OPERATOR INTERFACE

A. Operation: Graphical User Interface shall have full Client-Server capabilities. Server PC shall reside on the data network and be accessible from building intranet.

1. Provide graphical interface based on the Tridium Niagara Platform based on owners requirements.

B. Communication: Server PC and Building Controller network backbone shall communicate using ISO 8802-3 (Ethernet) Data Link/Physical layer using TCP/IP protocol. GUI software shall have the capability to connect to remote sites via intranet.

C. BACnet Communication: Access to BACnet devices shall be though the Tridium Niagara Platform. The Tridium Niagara Platform shall map BACnet devices in the system, enabling consistent supervision tasks between devices and shall allow values from the BACnet devices to be included in schematic pages, and also enable users to make adjustments to and receive alarms from those devices.

D. Hardware:

E. Database Generation and Backup: The Graphical User Interface software shall have the capability to generate its database automatically and will self-learn on connection to the DDC system. This function will also apply if any future facilities are added to the DDC system. System databases should have the capability to be backed up on a regular basis to a specified location.

F. Graphical Functionality: Operator interface shall be graphically based and shall include at least one graphic per piece of equipment or occupied zone, graphics for each chilled water and hot water system, and graphics that summarize conditions on each floor of each building included in this contract. Graphics shall allow operator to monitor system status, to view a summary of the most important data for each controlled zone or piece of equipment, to use point-and-click navigation between zones or equipment, and to edit setpoints and other specified parameters.

1. Graphical file types supported should include BMP, GIF, JPEG, WMF and EMF files as a minimum.

2. The following file types must be able to be integrated into graphics pages: SWF, HTML, DOC, XLS, XML, PPT, PDF and URL as a minimum.

3. Graphics pages must be able to be organized into folders in a menu tree format for easy navigation between buildings and areas of buildings.

4. A full graphics library should be included showing typical mechanical components such as Boilers, Chillers and AHUs.

5. All dynamic data shown on the GUI must be in live format. Data shown from a database of parameters is not acceptable. All dynamic data points when clicked shall allow the operator to change setpoints and parameters or view data logs.

6. Data logs: Multi-trace color data logs should be able to be viewed in a single window or in text format. Zoom in-out features must be supported when viewing data logs. Charting of points or live data recording of values must also be supported.

7. Dynamic graphics must be capable of 3D color dynamic movement to indicate status of controlled plant and color shifts to represent temperatures in occupied zones.

8. Graphical buttons and icons shall provide access to other graphic pages or screens or command custom sequences or events or other custom screens.

9. GUI must support script commands to initiate automatic viewing of graphics pages or system commands from a button or icon.

G. Schedule management. It is not acceptable for the GUI to be the sole system scheduling device. Schedules and exceptions must reside at the controller level and be unaffected should the GUI be disabled for any reason. The GUI shall support the following scheduling features:

1. Allow users to manage multiple controller occupation times into groups in the following ways. By system, building, area of building or single occupied zone. GUI shall allow schedules to be added or removed from schedule groups.

2. Users should be able to implement holiday or other schedule exceptions to a Global, building, area of building or single occupied zone level.

3. A calendar display of all normal operating schedule times and exceptions shall be shown. Exceptions dates shall be shown in different color formats for ease of identification by user. Exception scheduling must be able to be carried out at least 20 years in advance as a minimum. Annual recurring exception dates should be implemented once only without the need for further user interaction.

4. Normal operating schedules should be shown in a graphical form in week format. Day operating times should have the ability to be copy and pasted for day, week or working week.

5. Schedule On-Off Periods. A minimum of 50 on-off periods per day must be available for selection.

H. Alarm monitoring. It is not acceptable for the GUI to be the sole system alarm monitor. Alarms must be generated at the controller level and reported alternatively should the GUI be disabled for any reason. Every system alarm at network, controller or device level, any user adjustment of the system or failure of a scheduled event shall be logged, time and date stamped in the alarm database. Alarm database will show active, active/acknowledged, cleared and cleared/acknowledged alarms. It shall be possible to view alarms in

chronological or summary views. Alarms shall show time of occurrence, type of alarm, origin and explanation of alarm in text format. Alarms shall be delivered automatically to central GUI over intranet, Internet or phone lines. In addition, the GUI shall have the following features:

1. Alarms shall be filtered and grouped to enable specific alarm actions and retransmissions dependent on the type of alarm received.

2. Once an alarm has been initiated, an active alarm panel window shall be flashed on screen with an audible alert. Alarms shall be silenced and/or actioned from the alarm panel and specific graphic pages shall be shown dependent on alarm filter and group.

3. Once an alarm has been received at the GUI, the alarm shall be forwarded dependent on which alarm filter and group the alarm is associated with. Alarms shall be capable of being forwarded in the following methods without the need for additional software:

   a. As an email to any valid email address.
   b. As a cell phone text message via the Internet.
   c. As a cell phone text message via SMS directly from the GUI PC.
   d. In SNMP format to existing network management software.
   e. To any other DDC system alarm receiver such as a system display panel.
   f. To an attached or network printer.

I. Event scheduling. Automated scheduled events shall be user configurable and all pending or past events shall be viewed in chronological format or be filtered by event type. In addition, all automated scheduled events shall have the capability of being manually initiated, edited or deleted at any time by the operator. Scheduled events shall include but not be limited to:

1. Data log recording upload to database.

2. Automated schedule download.

3. System time synchronization.

4. Automated database backup.

5. Automated printing of graphics pages.

J. Internet connectivity. GUI software shall allow for access to any intranet or Internet Web site or IP address to allow seamless integration to any Web-enabled equipment or systems such as access, lighting, fire and security systems. Web or IP addresses must have the ability to be saved and named

for later use. GUI software shall allow for access to any building controllers configuration or programming mode via controllers Web interface.

K. GUI software shall have a multi-level security system. Each user shall have a unique username and password set up in the PC server and each user shall belong to a user workgroup that has identical access rights to all the functional areas of the GUI software. No access to the GUI shall be possible until a valid username and password has been entered. GUI software shall create an alarm and log to the alarm's database whenever a user logs in or out of the system. In addition, any activity such as setpoint, parameter or schedule changes made by that user shall also be logged to the alarm database. In addition, the GUI software shall provide access level workgroups with the following features:

1. Each workgroup shall have a login graphics page assigned and will display the page whenever a user belonging to the workgroup logs in.

2. Each graphical button, icon and graphics folder shall have a security level and users shall have no access to that item should a user have a lower access level.

3. Each workgroup shall be linked in software to the available alarm groups. If the alarm group is not linked, the user shall have no access to those alarms.

4. Each graphics folder shall be linked to user workgroups. If the folder is not linked to the workgroup, the user shall have no access to the graphics pages within the folder.

5. Each workgroup shall have a logout interval established to automatically log out a user after an inactivity period.

6. Each workgroup's users shall have multiple configuration rights to the GUI. Users shall not be able to configure the following GUI functions unless workgroup level permits.

   a. Configure data logs or automatic data log recordings.
   b. Configure scheduled events.
   c. Configure alarm handling filters, groups and retransmissions.
   d. Configure, add, delete or edit graphics pages.
   e. Close down the software.
   f. Configure time schedules or schedule group exceptions.
   g. Add or remove controller points from the database.
   h. Configure users and workgroups.

L. System tools. GUI shall include context-sensitive online help on the server PC and include dynamic graphical displays on how to operate, edit and configure all functional areas of the software.

M. Reports and Logs. Operator shall be able to select, to modify, to create, and to print reports and logs. Operator shall be able to store report data in a format accessible by standard spreadsheet and word processing programs.

N. Integration capability. GUI software shall have Dynamic Data Exchange (DDE) capability to integrate third-party software packages. If required, provide integration software/hardware from single manufacturer to include:

1. BACnet integration

2. LonWorks integration

3. OPC integration

4. Modbus integration.

O. Web client user interface. Once connected to the BAS server via standard Web browser, Web clients shall have the functionality to access the BAS system without the need for manufacturer's software or files on workstations. Web clients shall have the capability of connection to the server from anywhere on the intranet or Internet. Areas of functionality supported via Web interface to server shall include as a minimum:

1. Security and access: Once a valid username and password is entered, user shall have access to all areas of functionality and graphics supported by their security level as described in this section.

2. Graphics functionality: Color animated graphics pages as created on the server shall be shown identically on a Web browser. They shall allow operator to monitor system status, to view a summary of the most important data for each controlled zone or piece of equipment, to use point-and-click navigation between zones or equipment, and to edit setpoints and other specified parameters as created on the server from the Web browser.

3. System database functionality: Users shall be able to navigate through the system from the database view of connected DDC systems via site, LAN and controller view format as shown on the server. User shall also have the ability to filter points and change setpoints and schedules from this view.

4. Data log functionality: User shall have the ability to view multi-trace color graphs and data logs from a Web browser.

5. Schedule management functionality: Users shall be able to edit time schedules and add, edit or delete exceptions from a Web browser.

6. Alarm handling functionality: Incoming alarms shall generate alarm panels identically as shown on the server. Users shall be able to action and filter any incoming alarms to the system from a Web browser.

2.5 PROGRAMMING SOFTWARE

A. Building and energy management applications shall reside and operate in controllers. Program software shall be used only to download, edit or modify program applications.

B. Specification: Programming tool shall be a drag and drop, graphical function block windows based application tool and shall create a database of program applications in all building controllers. Program software shall create a file for each building controller on the system. For each building controller there shall be a page of graphical programming information. Each page shall contain a specific sequence of operation carried out by a controller.

C. Documentation: Software tool shall create an 8" x11" page for each sequence within a controller. Each page and controller program shall be printed and attached as part of the as-built package supplied by contractor.

D. Communication: Software shall be able to communicate with controllers by direct serial, Ethernet via intranet and Internet or modem connections.

E. Custom Application Programming: Operator shall be able to create, edit, debug, and download custom programs to building controllers. System shall be fully operable while custom programs are edited and compiled. Programming language shall have the following features:

1. Language: Language shall be graphically based and shall use function blocks arranged in a logic diagram that clearly shows control logic flow. Function blocks shall directly provide functions listed below, and operators shall be able to create all function blocks.

2. Programming Environment: Tool shall provide a full-screen, cursor-and-mouse-driven programming environment that incorporates word processing features such as copy, cut and paste. Operators shall be able to insert, add, modify, and delete custom programming code, and to copy blocks of code to a file library for reuse in other control programs.

3. Peer to Peer Program Modules: Operator shall be able to develop independently executing program modules that can disable, enable and exchange data with other program modules and controllers.

4. On-line checkout: Software shall have the capability to download, upload and view all program parameters and program function blocks live in real-time when connected to system. Program strategies must be able to be added, deleted or edited live while on-line without the need for download and restart of controllers.

5. Strategy Simulation: Software shall provide simulation mode which simulates a building controller allowing a strategy to be tested before it is downloaded to a controller.

6. Override: Software shall have the capability of overriding any hardware or software value with operator's specified value.

7. Database reconciliation: Operator shall be able to upload controller database and compare to current database diagram. Diagram shall be automatically updated to include all parameter changes since last update.

8. Conditional Statements: Operator shall be able to program conditional logic using compound Boolean (AND, OR, and NOT) and relational (EQUAL, LESS THAN, GREATER THAN, NOT EQUAL) comparisons.

9. Mathematical Functions: Language shall support floating-point addition, subtraction, multiplication, division, and square root operations, as well as absolute value calculation and programmatic selection of minimum and maximum values from a list of values. Both direct and reverse acting PID loops shall be supported. Software shall have PID Loop tuning tool built-in as standard

10. Once a function has been created it shall be re-used and dynamically linked to any page on the controller programming tool.

F. After completion, all programming databases and software shall reside on facility's workstation PC for troubleshooting and editing.

2.6 BUILDING CONTROLLERS

A. General: Provide Building Controllers (BC) as required to achieve sequence of operation. Provide one BC for each piece of mechanical equipment such as air handler, rooftop or central plant application. Controller shall be capable of adequately covering all IO points listed in points list plus 25% expansion capability. Using more than one BC to carry out an equipment application is not acceptable.

B. Stand-Alone Operation: Each BC on the BAS system shall be of true stand-alone operation. All schedules, data logs, time-clock, alarms graphics and program application shall reside in the controller. BCs that require global or master controllers or devices are not acceptable. Each BC shall be able to broadcast data from one to another or globally throughout the system in a true peer-to-peer way, any data value within the controller to any other controller, specified group of controllers, or globally around the system. Controllers shall build LAN and Internetwork communications across data networks and routers and report communications loss to Operator Interface.

C. Hardware Design: BCs must be modular in design and be mounted on standard DIN Rail for ease of replacement and expansion. Every input or output shall have 2-part connectors provided to facilitate commissioning and replacement. BCs shall have a minimum of 16 IO points and be capable of expanding to a total of 128 input-output points through a series of plug in input-output modules. Input-output modules shall be connected to the BC by a CAN network bus and have the capability of being mounted up to 33 feet from controller. Each BC shall provide a serial service communication port for connection to a Portable Operator's Terminal or connection to a local controller display panel.

D. Hardware: Controllers shall be powered by 24VAC or DC and shall be protected by a self-resetting solid state circuit breaker and bus communications shall be protected by a multifuse. Controllers shall be rated to operate at plus or minus 15%. Each BC shall have LED status indication of network, bus, power and controller failure.

E. Environment: Controller hardware shall be suitable for anticipated ambient conditions and mounted in plenum or inside specified equipment. Controllers shall have the following specifications as a minimum:

1. UL916 Listed: Enclosed Energy Management Equipment

2. Temperature: rated at 32°F to 120°F

3. Humidity: 0 to 90%RH non-condensing

F. Memory: BC must have flash memory that is non-volatile to power cycles. Application program and controller parameters must be stored in flash in case of a power outage. Controllers using batteries to store program or parameters are not acceptable. A minimum of 16MB of SDRAM and 8MB of Flash memory shall be employed at each controller.

G. Network communication: Each BC shall have a minimum of one 10BaseT Ethernet port as its primary network communications connection and communicate directly on the buildings TCP/IP data network without the need

for master control panels. Each BC shall have an on-board Web server that will allow local or remote system control, monitoring and configuration via a standard Web browser.

H. BACnet Communication: Each BC shall be native BACnet and integrate seamlessly with a BACnet system, communicating on a BACnet IP LAN at up to 10Mbps.

I. Real Time Clock: Each BC must have a Real Time Clock. In case of a power outage the time-clock must be maintained for 6 days by a capacitor. Any BC shall have the ability to act as the system time-master. System timemaster will automatically adjust to Daylight Savings Times.

J. Sequencing: BC shall execute all program sequences independent of program size once per second.

K. Scheduling: BC controllers shall provide the following schedule options as a minimum. All schedule, exception or holiday changes shall be configurable from the Web browser interface or the Operator Interfaces.

1. Weekly: Provide separate schedules for each day of the week. Each schedule shall be able to include up to 50 occupied periods (50 start-stop pairs). Days shall have the ability of being copied and pasted from the Web browser.

2. Exception: Operator shall be able to designate an exception schedule for each of the next 365 days in advance. After an exception schedule has executed, system shall discard and replace exception schedule with standard schedule for that day of the week. Exceptions shall have up to 16 priority levels. Should exceptions overlap, exception with highest priority level shall take precedence over others with lower priorities. Exceptions shall be added, edited or adjusted from the Web browser.

3. Holiday: Web operator shall be able to define holiday exception schedules of varying length on a scheduling calendar that repeats each year.

4. Controller shall support multiple shifted scheduling, enabling start-stop of equipment up to 6 hours before-after normal schedule start-stop. Shifted scheduling shall also support Optimized start-stop.

5. Optimized start-stop: One optstart-stop function shall be assigned to any schedule within the controller. Optstart functions shall be self-learning and shall have operator adjustable start-stop limits.

L. Data Logs: Each BC shall be able to log any data within a controller at one second, 1 minute, 5 minute, 10 minute, 15 minute, 20 minute, 30 minute, 1 hour, 6 hour or 24 hour intervals. 1000 points of data must be held in data log until last value is overwritten. Multiple data logs with differing intervals shall have the capability of being attached to any data point. Any data log shall be viewed from the browser or Operator Interfaces. Data logs shall be viewed in graphical or text format by the operator.

M. Alarms: BCs shall generate alarms configured by the programming tool. Alarms shall be sent to the operator interface workstation. In the event that operator workstation is off-line for any reason, alarms shall be sent to the system Display Panel, via email or cell phone text message directly from the controller across the data network to any internal or external email or cell phone email address. Alarms shall have the capability of being sent to different locations depending on schedule status or operator defined alarm group. An internal alarm log shall record the last 50 alarms generated by controller. Alarm log shall be viewed from the browser or Operator Interfaces.

N. Graphics: Each BC shall be capable of containing graphics pages of the connected mechanical equipment as well as the application program. Dynamic data points shall be shown on graphical backdrops representing all hardware and software points within the controller. Graphics pages shall contain links to other graphics pages within the controller, other building controllers on the BAS system, any intranet or Internet Website and any valid email address. Controller shall have the ability to add any user defined text to any graphics page. Graphics pages shall be accessible from any standard Web browser on the intranet or Internet.

O. Security: Each BC shall have username and password security with the ability to have a unique username and password for up to 500 users. In addition, each user shall have a level of access from 0 to 100 to the controller ranging from read only access through to full configuration rights to the controller. Access to the controller shall be read only until a valid username and password is entered via any standard Web browser. All users and levels of access shall be configurable by the operator. Each user shall have a default graphics page assigned and loaded when valid username and password is entered.

P. Controller Input-Outputs: All controller inputs and outputs may be overridden on-off or by any analog value of the operator's choice via a standard Web browser. In addition an override timer may be initiated to switch all inputs-outputs to automatic operation after user has logged out.

1. Controller inputs shall all be Universal Inputs and be selectable by moving a jumper for the required input type. Controller shall support thermistor, 0-10vdc voltage and 0-20 or 4-20mA current inputs with 12-bit resolution. All digital inputs shall be volt free contacts capable of

pulse counting up to 30 pulses per second. When input is selected for digital, LED shall indicate when contact is closed. All sensor scaling and curves shall be software configurable.

2. Controller shall have analog or Form C relay outputs. Analog outputs shall be modulating 0-10Vdc and current limited to 20mA as required to properly control output devices. All analog outputs shall have modulating LED's to indicate output voltage. Analog outputs shall have 11-bit resolution as a minimum. Form-C relay outputs shall have common, normally-open and normally-closed contacts. All relay outputs shall have LED's to indicate relay status.

3. Protection: All input and outputs shall have over-voltage protection built-in to protect main board from failure.

Q. PID Loops: Loops shall have the capability to be sequenced once per second and switched between occupied and unoccupied setpoints. In addition, a manual override and level may be initiated and implemented in logic. PID Loops shall support drift-limit alarm and controlled input alarms. Should controlled input fail or alarm, one of the following actions shall be initiated:

1. Maintain output at level when sensor failed and return to normal operation on alarm clear.

2. Automatically go to pre-defined controlled input value and return to normal operation on alarm clear.

3. Automatically go to pre-defined loop output level and return to normal operation on alarm clear.

4. Automatically go to pre-defined loop output level and stay there until a alarm clears and a manual override is initiated by operator.

R. Runtime Totalization: Controller shall provide an algorithm that can totalize runtime for each digital input or output and calculate the number of starts. Operator shall be able to enable runtime alarm based on exceeded adjustable runtime limit via the Web browser interface.

S. Staggered Start: Controller shall stagger controlled equipment restart after power outage. Operator shall be able to adjust equipment restart order and time delay between equipment restarts via the Web browser interface.

T. Web Browser: In addition, the Web browser interface shall support the following functions on the building controller other than outlined above:

1. Configuration and editing of any function or programming module stored within the controller.

2. Operator override of any function module or software point within the controller in addition to the physical input-outputs.

3. Support of navigation through logic flow diagram to support commissioning via the browser.

4. Display lists of each type of function or programming module within the controller in numerical order and highlight any current alarm points in flashing red format.

5. Operation will be mouse driven point and click between views, graphics and modules. Values shall be changed by drop-down menus or by clicking and typing in open fields.

2.7 BACnet UNITARY CONTROLLERS

A. Provide fully programmable BACnet VAV controllers with or without an on-board actuator. Both shall include a built-in airflow sensor and a pressure transducer. BACnet VAV controllers shall have a pre-loaded strategy and also shall be fully programmable.

B. Provide fully programmable BACnet unitary controllers with universal I/O for terminal equipment control of RTU's, HP, FCU, UV, and others.

C. Network Communication. As a BACnet controller, the unitary controllers shall integrate seamlessly with the building control system, communicating at up to 76.8Kbps on a BACnet MS/TP LAN.

D. Hardware Design. BACnet VAV controller actuator shall be left or right mountable with ability to set actuator to clockwise or counter-clockwise rotation. BACnet unitary controllers shall be DIN-rail mounted and have software-configurable inputs and outputs allowing for compatibility with a wide range of HVAC and other control and monitoring applications.

2.8 AUXILARY CONTROL DEVICES

A. Low-Voltage Space Thermostats and Aquastats: Low-voltage space thermostats shall be 24V, bimetal-operated, snap-action switch type, with adjustable anticipation heater, concealed setpoint adjustment, 40°F-90°F setpoint range, 2°F maximum differential, and vented ABS plastic cover.

1. Line-Voltage Space Thermostats and Aquastats: Line-voltage space thermostats shall be bimetal-actuated, open-contact type or bellows-actuated, enclosed, snap-switch type or equivalent solid-state type, with heat anticipator, UL listing for electrical rating, concealed setpoint

adjustment, 55°F-85°F setpoint range, 2°F maximum differential, and vented ABS plastic cover.

a. Line-Voltage Thermostats to be supplied and installed by Division 23 contractor.

2. Low-Limit Freezestats: Low-limit airstream thermostats shall be of vapor pressure type. Element shall be at least 20 ft long. Element shall sense temperature in each 1 ft section and shall respond to lowest sensed temperature. Low-limit freezestat shall be manual reset.

B. Temperature Sensors: Temperature sensors shall be thermistor or 4–20mA dependent on application.

1. Duct Supply Air Sensors: Terminal unit supply duct sensors shall be 6" long thermistor. AHU supply duct sensors shall be 16" long thermistors of type 10KII.

2. Mixed air sensors shall be averaging sensors shall be a minimum of 5 feet in length per 10 ft^2 of duct cross-section. Sensors shall be 10KII type thermistors or generate a 4-20mA signal.

3. Immersion Sensors: Provide immersion sensors with a separable stainless steel or brass well. Well pressure rating shall be consistent with system pressure it will be immersed in. Well shall withstand pipe design flow velocities. Immersion sensors shall be thermistor of type 10KII.

4. Outside Air Sensors shall be mounted on north facing wall and be a 10K type II thermistor. Sensor shall be mounted in a water-proof enclosure.

5. Space Sensors: Space sensors shall be wall mounted thermistors and shall have setpoint adjustment and override button options. See plans for required types and locations. Space sensors shall be 10KII type thermistors and shall have guards fitted on locations shown on plans.

6. Digital Readout Space Sensors: Space sensors shall be wall mounted thermistors and shall have a digital readout of temperature, setpoint and occupancy status. Adjustments shall include setpoint and occupancy. See plans for required types and locations. Space sensors shall be 10KII type thermistors and shall have guards fitted on locations shown on plans.

C. Humidity Sensors:

1. Duct and room sensors shall have a sensing range of 20%-80%.

2. Duct sensors shall have a sampling chamber.

3. Outdoor air humidity sensors shall have a sensing range of 20%-95% RH and shall be suitable for ambient conditions of 40°F-170°F.

4. Humidity sensors shall not drift more than 1% of full scale annually.

5. Humidity sensors shall have a 2% rated accuracy.

E. Relays:

1. Control Relays: Control relays shall be plug-in type, UL listed, and shall have dust cover and LED "energized" indicator. Contact rating, configuration, and coil voltage shall be suitable for application.

2. Time Delay Relays: Time delay relays shall be solid-state plug-in type, UL listed, and shall have adjustable time delay. Delay shall be adjustable ±100% from setpoint shown. Contact rating, configuration, and coil voltage shall be suitable for application. Provide NEMA 1 enclosure for relays not installed in local control panel.

3. Relay-in-box: Shall be UL listed and have a compact NEMA 1 housing with ½ or ¾ inch NPT nipples. Relays shall have LED "energized" indication. Wires shall be color-coded. Contact rating, configuration, and coil voltage shall be suitable for application.

F. Current Transmitters:

1. AC current transmitters shall be self-powered, combination split-core current transformer type with built-in rectifier and high-gain servo amplifier with 4-20 mA two-wire output. Full-scale unit ranges shall be 10A, 20A, 50A, 100A, 150A, and 200 A, with internal zero and span adjustment. Unit accuracy shall be ±1% full-scale at 500 ohm maximum burden.

2. Transmitter shall meet or exceed ANSI/ISA S50.1 requirements and shall be UL/CSA recognized.

3. Unit shall be split-core type for clamp-on installation on existing wiring.

G. Current Transformers:

1. AC current transformers shall be UL recognized and shall be completely encased (except for terminals) in approved plastic material.

2. Transformers shall be available in various current ratios and shall be selected for ±1% accuracy at 5A full-scale output.

3. Use fixed-core transformers for new wiring installation and split-core transformers for existing wiring installation.

H. Voltage Transformers:

1. AC voltage transformers shall be UL recognized, 600Vac rated, and shall have built-in overload trip protection.

2. Transformers shall be suitable for ambient temperatures of 40°F-130°F and shall provide ±0.5% accuracy at 24Vac and 5VA load.

3. Windings (except for terminals) shall be completely enclosed with metal or plastic.

I. Current Switches:

1. Current-operated switches shall be self-powered, solid-state with adjustable trip current. Select switches to match application current and DDC system output requirements. Any current switches used on VSDs shall be specialized for VSD application. Current switches shall be VERIS HAWKEYE or equivalent.

J. Damper Actuators:

1. Outside air and exhaust air damper actuators shall be mechanical spring return. Capacitors or other non-mechanical forms of fail-safe are not acceptable. The actuator mounting arrangement and spring return feature shall permit normally open or normally closed positions of the damper as required.

2. Economizer actuators shall utilize analog control 0/2–10VDC, floating control is not acceptable.

3. Electric damper actuators (including VAV box actuators) shall be direct shaft-mounted and use a V-bolt and toothed V-clamp causing a cold weld effect for positive gripping. Single bolt or set-screw type fasteners are not acceptable.

4. One electronic actuator shall be direct shaft-mounted per damper section. No connecting rods or jackshafts shall be needed. Small outside air and return air economizer dampers may be mechanically linked together if one actuator has sufficient torque to drive both and damper drive shafts are both horizontal installed.

5. Multi-section dampers with electric actuators shall be arranged so that each damper section operates individually. One electronic actuator

shall be direct shaft-mounted per damper section. (See below execution section for more installation details.)

2.10 WIRING RACEWAYS AND POWER SUPPLIES

A. General: Provide copper wiring, plenum cable, and raceways as specified in applicable sections of Division 26.

B. Insulated wire shall use copper conductors and shall be UL listed for 200°F minimum service and be plenum rated.

C. Power Supplies: Control transformers shall be UL listed. Furnish Class 2 current-limiting type or furnish over-current protection in primary and secondary circuits for Class 2 service in accordance with NEC requirements. Limit connected loads to 80% of rated capacity.

1. DC power supply output shall match output current and voltage requirements. Unit shall be full-wave rectifier type with output ripple of 5.0 mV maximum peak-to-peak. Regulation shall be 1.0% line and load combined, with 100-microsecond response time for 50% load changes. Unit shall have built-in over-voltage and over-current protection and shall be able to withstand 150% current overload for at least three seconds without trip-out or failure.

D. Wiring Standards and Identification: Control wiring shall conform to the following standards and color codes:

1.	Ethernet Communication	Orange	CAT5E
2.	Twisted Pair Communication + / TX White - / RX Black	Light Green	22/2
3.	Two Wire Sensors + Red - Black	Ivory	18/2/SH
4.	Wall Sensors	Light Green	6C Flat
5.	Digital Output Common Black Switched Red	Ivory	18/2
6.	Analog Output + Red - Black	Ivory	18/2

7.	ASC Power		Ivory	18/2
	+ / Hot	Red		
	- / Neutral	Black		

PART 3 EXECUTION

3.1 EXAMINATION

A. Thoroughly examine project plans for control device and equipment locations. Report discrepancies, conflicts, or omissions to Architect or Engineer for resolution before starting rough-in work.

B. Inspect site to verify that equipment can be installed as shown. Report discrepancies, conflicts, or omissions to Engineer for resolution before starting rough-in work.

3.2 INSTALLATION

A. Install control units and other hardware on permanent walls where not subject to excessive vibration.

B. Install controller software and implement features of programs to specified requirements and appropriate to sequence of operation.

C. A 120 volt alternating current, dedicated power circuit to each programmable control panel shall be provided by Division 26.

D. Mechanical Rooms and exposed locations to be in full metal conduit. Where absolutely necessary conduit installed in areas accessible to the public shall be in metal Wiremold type conduit.

E. Conduit sleeves in fire rated walls to be caulked with firestop and have bushings on both ends. All conduit stubs and knockouts to have bushings.

F. Plenum rated cable shall be used above drop ceilings and cable paths run parallel to building structure or structural steel. Plenum cable may be laid in cable trays or supported at regular intervals by tie-wrap and anchor or tie wrap and bridal ring combinations at no more than 3 foot intervals.

3.3 FIELD SERVICES

A. Start and commission systems. Allow adequate time for start-up and commissioning prior to placing control systems in permanent operation. Allow time in this contract to work with commissioning agent if required.

3.4 COORDINATION

A. Site:

1. Assist in coordinating space conditions to accommodate the work of each trade where work will be installed near or will interfere with work of other trades.

2. Coordinate and schedule work with other work in the same area and with work dependent upon other work to facilitate mutual progress.

B. Test and Balance:

1. Provide Test and Balance Contractor a single set of necessary tools to interface to control system for testing and balancing.

2. Train Test and Balance Contractor to use control system interface tools.

3. Test and Balance Contractor shall return tools undamaged and in working condition at completion of testing and balancing.

3.5 GENERAL WORKMANSHIP

A. Install equipment, piping, and wiring or raceway horizontally, vertically, and parallel to walls wherever possible.

B. Provide sufficient slack and flexible connections to allow for piping and equipment vibration isolation.

C. Install equipment in readily accessible locations as defined by National Electrical Code (NEC) Chapter 1 Article 100 Part A.

D. Verify wiring integrity to ensure continuity and freedom from shorts and ground faults.

E. Equipment, installation, and wiring shall comply with industry specifications and standards and local codes for performance, reliability, and compatibility.

3.6 INSTALLATION OF SENSORS

A. Install sensors according to manufacturer's recommendations.

B. Mount sensors rigidly and adequately for operating environment.

C. Install room temperature sensors in the following ways:

1. On block walls mount on 2 x 4 inch box in wall with ½ inch conduit stubbed out above plenum ceilings.

2. On existing hollow walls mount on 2 x 4 inch box in wall with bushing knockout. If thermostats are to be mounted without box, use anchors. Screws without anchors are not acceptable.

3. On existing filled walls use surface wire mold or conduit depending on location. Co-ordinate with owner on acceptable method.

D. Use averaging sensors in mixing plenums and hot and cold decks. Install averaging sensors in a serpentine manner vertically across duct. Support each bend with a capillary clip.

E. Install mixing plenum low-limit sensors in a serpentine manner horizontally across duct. Support each bend with a capillary clip. Provide 1 ft of sensing element for each 3 ft^2 of coil area.

F. Install pipe-mounted temperature sensors in wells. Install liquid temperature sensors with heat-conducting fluid in thermal wells.

G. Install outdoor air temperature sensors on north wall at designated location with sun shield.

H. Differential Air Static Pressure:

1. Supply Duct Static Pressure. Pipe high-pressure tap to duct using a pitot tube. Make pressure tap connections according to manufacturer's recommendations.

2. Return Duct Static Pressure. Pipe low-pressure tap to duct using a pitot tube. Make pressure tap connections according to manufacturer's recommendations.

3. Building Static Pressure. Pipe pressure sensor's low-pressure port to the static pressure port located on the outside of the building through a high-volume accumulator. Pipe high-pressure port to a location behind a thermostat cover.

4. Pressure transducers, except those controlling VAV boxes, shall be located in a vibration-free location accessible for service without use of ladders or special equipment.

I. Mount gauge tees adjacent to air and water differential pressure taps. Install shut-off valves before tee for water gauges.

J. Smoke detectors, freezestats, high-pressure cut-offs, and other safety switches shall be hard-wired to de-energize equipment as described in the sequence of operation. Switches shall require manual reset. Freezestats may be automatic reset if specified by building owner.

3.7 ACTUATORS

A. General. Mount actuators and adapters according to manufacturer's recommendations.

B. Electric and Electronic Damper Actuators. Mount actuators directly on damper shaft or jackshaft unless shown as a linkage installation. Link actuators according to manufacturer's recommendations.

1. For low-leakage dampers with seals, mount actuator with a minimum 5° travel available for damper seal tightening.

2. To compress seals when spring-return actuators are used on normally closed dampers, power actuator to approximately 5° open position, manually close the damper, then tighten linkage.

3. Check operation of damper-actuator combination to confirm that actuator modulates damper smoothly throughout stroke to both open and closed positions.

4. Provide necessary mounting hardware and linkages for actuator installation.

3.8 IDENTIFICATION OF HARDWARE AND WIRING

A. Label wiring and cabling, including that within factory-fabricated panels, with control system address or termination number at each end within 2" of termination.

B. Permanently label or code each point of field terminal strips to show instrument or item served.

C. Label control panels with minimum 1" letters on laminated plastic nameplates.

3.9 SYSTEM CHECKOUT AND TESTING

A. Startup testing. Complete startup testing to verify operational control system before notifying owner of system demonstration.

1. Calibrate and prepare for service each instrument, control, and accessory equipment furnished under Section 230900.

2. Verify that control wiring is properly connected and free of shorts and ground faults. Verify that terminations are tight.

3. Enable control systems and verify each input device's calibration. Calibrate each device according to manufacturer's recommendations.

4. Verify that binary output devices such as relays, solenoid valves, two-position actuators and control valves, and magnetic starters, operate properly and that normal positions are correct.

5. Verify that analog output devices such as actuators are functional, that start and span are correct, and that direction and normal positions are correct. Check control valves and automatic dampers to ensure proper action and closure. Make necessary adjustments to valve stem and damper blade travel.

6. Verify that system operates according to sequences of operation. Simulate and observe each operational mode by overriding and varying inputs and schedules. Tune PID loops and each control routine that requires tuning.

7. Alarms and Interlocks:

   a. Check each alarm with an appropriate signal at a value that will trip the alarm.
   b. Trip interlocks using field contacts to check logic and to ensure that actuators fail in the proper direction.
   c. Test interlock actions by simulating alarm conditions to check initiating value of variable and interlock action.

PART 4 – SEQUENCE OF OPERATIONS

4.1 <u>100% OUTSIDE ROOFTOP VENTILATION UNIT WITH ENERGY RECOVERY WHEEL (RVU-3 and 4)</u>

A. The building DDC system shall enable and disable the unit and control and monitor all points of control described herein. The unit manufacturer's DDC Controller shall start and stop the supply and exhaust fans, control outside air damper, stage controls for direct expansion cooling, and stage gas heat. The controller shall also control the enthalpy wheel rotation, frost control, and alarm points.

B. Occupied: The outside and exhaust air dampers shall fully open 100%. When the outside and exhaust air dampers are fully open, an end switch on the dampers shall provide positive proof. Upon positive proof, the supply and exhaust air fans and the enthalpy heat wheel shall be energized. The manufacturer's unit controller shall stage the DX cooling to maintain an adjustable discharge temperature off the cooling coil of 54°F. Below an ambient temperature of 50°F, the outside air temperature is sufficient for cooling, and the DX cooling shall be locked out. Concurrently, the unit controller shall monitor the unit leaving temperature and maintain an adjustable setpoint of 72°F. If the heat pipe cannot maintain the setpoint temperature, the unit controller shall enable the gas heat and modulate the heat to maintain a leaving air temperature of 72°F.

C. Unoccupied: In the unoccupied mode, the unit shall remain disabled.

D. Smoke Detectors: On detection of products of combustion, the smoke detectors shall stop the unit supply and exhaust fan. The smoke detectors shall be wired directly to the unit's supply and exhaust fan starter.

E. Heat Wheel Failure: On detection of a heat wheel rotational failure, an alarm shall be sent to all network terminals, alarm printers, and the central operator computer.

F. Schedule: Unit shall be scheduled to operate during occupied periods in accordance with the Owner's instructions. Units' startup shall be staggered to avoid electrical overload.

4.2 ROOFTOP AIR CONDITIONING UNIT WITH ENERGY RECOVERY WHEEL(RTU-1)

A. The building DDC Controller shall enable and disable the unit and control and monitor all points of control described herein. The unit manufacturer's Controller shall start and stop the supply and exhaust fans, control outside air damper, return air damper, heat wheel bypass dampers, stage controls for direct expansion cooling, and stage gas heat. The controller shall also control the enthalpy wheel rotation, frost control, and alarm points.

B. Occupied: The outside air damper opens (1980 CFM), the exhaust air damper opens fully 100% and the recirculation damper shall close proportionally. When the dampers have opened, an end switch on the damper shall provide positive proof. Upon positive proof, the supply and exhaust air fans and the enthalpy heat wheel shall be energized. The manufacturer's unit controller shall stage the DX cooling and gas heating to maintain the space temperature setpoint. On a rise in space temperature, the DX cooling shall be staged on. On a fall in temperature, the DX cooling shall be staged off, and on a continued fall, the gas heat shall be enabled, and shall modulate to maintain space temperature. When the outside air temperature is above 40°F

and is below the outside air dry bulb economizing setpoint (53°F), the economizer mode shall be enabled. The outside air wheel bypass damper and the exhaust air wheel bypass damper shall fully open. The outside air damper shall modulate between its minimum and maximum positions, closing the return air damper proportionally to maintain the mixed air temperature setpoint. The exhaust fan shall modulate to maintain space pressurization.

C. On a call for dehumidification from the building DDC space humidity sensor the unit controller shall override the reset signal and enable the cooling to maintain a leaving air temperature off the DX coil of 53°F and modulate the condenser reheat coil to satisfy the space temperature.

D. Unoccupied: In the unoccupied mode, the unit shall remain disabled unless dehumidification is required. When the unit is in the unoccupied mode, the outside and exhaust air dampers shall remain closed, and return air damper shall remain open. On a rise in space humidity above the space humidity as sensed by the building DDC space humidity sensor, the building DDC Controller shall enable the unit for dehumidification and the supply fan shall be enabled. The exhaust fan shall remain de-energized. The outside air damper shall remain closed, the return air damper shall remain open, and the enthalpy wheel shall remain de-energized. The mechanical DX cooling shall be enabled during the dehumidification cycle for full cooling, and the hot gas reheat valve shall be modulated to maintain the unit discharge air setpoint. On a fall in space humidity below the setpoint, the unit shall be disabled by the Controller and return to the unoccupied mode.

E. Smoke Detectors: On detection of products of combustion, the smoke detectors shall stop the unit's supply and exhaust fan. The smoke detectors shall be wired directly to the unit's supply and exhaust fan starter.

F. Heat Wheel Failure: On detection of a heat wheel rotational failure, an alarm shall be sent to all network terminals, alarm printers, and the central operator computer.

G. Schedule: Unit shall be scheduled to operate during occupied periods in accordance with the Owner's instructions. Units' startup shall be staggered to avoid electrical overload.

4.3 ROOFTOP AIR CONDITIONING UNIT (RTU-2)

A. The building DDC Controller shall enable and disable the unit and control and monitor all points of control described herein. The unit manufacturer's Controller shall start and stop the supply fan, control outside air damper and return air damper, stage controls for direct expansion cooling, and stage gas heat.

B. Occupied: In the occupied mode, The controls shall open the outside air damper (350 CFM) and close the return air damper proportionally, and the supply fan shall be enabled.

C. The manufacturer's controller shall stage DX cooling and gas heating to maintain the space temperature setpoint. On a rise in space temperature, the DX cooling shall be staged on. On a fall in temperature, the DX cooling shall be staged off and gas heat enabled and modulated.

D. Unoccupied: In the unoccupied mode, the unit shall remain disabled.

E. Schedule: Unit shall be scheduled to operate during occupied periods in accordance with the Owner's instructions. Units' startup shall be staggered to avoid electrical overload.

4.4 ROOFTOP AIR CONDITIONING UNIT (RTU-3)

A. Gas Heating: The direct Digital Controller (DDC) shall energize the unit through its timed Program Command for morning warm up. During morning warmup, the supply fan shall be energized in low speed, the outside air damper shall remain full closed and shall be energized. At occupancy time, the DDC Controller shall modulate the outside air damper open to a preset minimum position.

B. On a rise in space temperature to the heating setpoint, (adjustable) of the DDC Controller, the DDC Controller shall modulate the gas heating. On a further rise in space temperature to the cooling setpiont, (adjustable) of the DDC Controller, the DDC Controller shall modulate the outside air damper fully open for free cooling closing the return air damper a proportional amount. Should the mixed air temperature fall below its low limit setpoint, the DDC Controller shall modulate the outside air damper closed to its preset minimum position opening the reurn air damper a proportional amount. Whenever the outside air temperature rises above an adjustable setpoint, the outside and return air dampers shall go to their preset minimum position. On still a further rise in space temperature, the DDC Controller shall activate the cooling cycle.

C. Whenever the setting of the freezestat is reached, the freezestat shall deenergize the supply air fan and close the outside damper.

D. During the unoccupied mode, the Unit shall cycle at a reduced setpoint keeping the outside air damper fully closed.

E. Humidity Control – On a rise in return air humidity to the setpoint of the DDC Controller, the DDC Controller shall modulate the compressors to maintain setpoint. Should the dehumidification process cause the space to reach the heating setpoint, the DDC Controller shall modulate the hot gas reheat valve to maintain space setpoint.

4.5 VARIABLE REFRIGERANT FLOW (VRF) SYSTEMS

A. The DDC system controller shall have the capability to control the VRF system through the BAS/ATC graphical interface on the central maintenance BAS/ATC workstations.

B. The DDC system shall have direct control of space temperature, space humidity, unoccupied/occupied, start/stop, and override capability.

C. The DDC system shall report available VRF system alarms to central maintenance BAS/ATC workstation.

D. The DDC contractor shall obtain the point addresses from the VRF system manufacturer and program each address for control, monitoring, or alarm by the BAS/ATC system.

1. VRF Indoor Heat Pump:

a. Whenever the space temperature setpoint is reset at the graphical interface, the DDC controls shall reset the VRF controls through the BACnet interface to the reset value at the VRF controller. The DDC system shall monitor space temperature through the BACnet interface and report the temperature to the BAS/ATC controls to display on the BAS/ATC graphics.
b. Whenever the space relative humidity setpoint is reset at the BAS/ATC graphical interface, the DDC controls shall reset the VRF controls through the BACnet interface to reset the value at the VRF controller. The DDC system shall monitor space relative humidity through the BACnet interface and report the space relative humidity to the BAS/ATC controls to display on the BAS/ATC graphics.
c. The VRF system occupied/unoccupied schedule for each VRF indoor unit shall be programmed at the BAS/ATC graphical interface and controlled through the BAS/ATC BACnet interface to start/stop each unit individually or as a group.
d. The BAS/ATC controls shall monitor and report filter alarms reported to the VRF system controller through the BACnet interface and send a dirty filter alarm to the BAS/ATC central maintenance workstation and display the alarm on the BAS/ATC graphic for the VRF unit.
e. The BAS/ATC controls shall monitor and report “normal/abnormal” alarms reported to the VRF controller through the BACnet interface and send a “normal/abnormal” alarm to the BAS/ATC central maintenance workstation and display the alarm on the BAS/ATC graphic for the VRF unit.

4.6 EXHAUST FAN CONTROL

A. Exhaust Fan EF-9 shall be controlled via the occupancy sensor in the associated restroom.

B. Exhaust Fan EF-11 shall be operated via the DDC control system based on space temperature. On a rise in temperature above the setpoint the exhaust fan shall be started and on a fall below the setpoint the exhaust fan shall stop.

C. Exhaust Fan EF-12 shall be controlled per a set schedule.

D. Exhaust fan EF-13 shall be operated by a wall mounted thermostat. On a rise in temperature above the setpoint the exhaust fan shall be started and on a fall below the setpoint the exhaust fan shall stop.

4.7 ELECTRIC UNIT HEATER, ELECTRIC CABINET UNIT HEATER AND ELECTRIC WALL HEATER CONTROL

A. The heater will be controlled by a wall mounted sensor. On a fall in room temperature, the DDC control system will start the unit fan and electric heat as required to maintain the preset space temperature setpoint. On a rise in temperature, the fan and heater will be stopped.

4.8 MAKE-UP AIR UNIT CONTROL

A. The unit shall be interlocked with the Kitchen Hood exhaust fan so that it is enabled whenever the exhaust fan is running. When the unit is enabled, the outside air damper shall fully open and the fan shall start. The gas heat shall be enabled to maintain the heating discharge temperature setpoint of the space temperature sensor. The gas heat shall be controlled in 16 steps by a discharge air temperature controller.

4.9 KITCHEN EXHAUST HOOD CONTROL

A. The DDC control system shall enable the kitchen exhaust hood to operate on a set schedule. The occupants can start or stop the exhaust hood locally.

4.10 ELECTRIC DUCT HEATING COIL (EDC-3 and 4)

A. Coil shall be controlled by wall mounted temperature sensor to maintain room setpoint in 2 stages. Coil operation shall be interlocked with RTU-2 supply fan. On a fall in room temperature, DDC space temperature controls will cycle the electric heating coil as required to maintain the preset space temperature setpoint. On a rise in temperature above the setpoint the heater will be turned off.

4.11 INPUT/OUTPUT SUMMARY

A. The Contractor shall be prepared to demonstrate monitoring and trending of each point shown on the Input/Output Summary.

System		Type			Access		Alarm States					Log
	Point	Analog	Digital	BACnet	Read	Write	Low	High	Readback	On	Off	
Engineered Air Rooftop Units		Analog	Digital	BACnet	Read	Write	Low	High	Readback	On	Off	Log
	Air Flow Problem			BV	X					X		X
	Ambient Sensor Alarm			BV	X					X		X
	Ambient Temperature (Intake Temp)			AV	X							X
	Blower Status			BV	X							X
	Cooling Lockout - Low Ambient Temp			BV	X							X
	Cooling Mode - A			BV	X							X
	Cooling Modulated Output			AV	X							X
	Cooling Stages % On			AV	X							X
	Cooling Status - Mech Cooling On/Off			BV	X							X
	Damper % Open			AV	X							X
	Damper Contact DM Closed			BV	X							X
	Damper Minimum Position			AV	X							X
	Damper Override Low Discharge Temp			BV	X							X
	Discharge Air Low Limit Lockout			BV	X							X
	Discharge Air Sensor Alarm			BV	X					X		X
	Discharge Air Temperature (Final Discharge Temp)			AV	X							X
	Discharge Air Temperature Setpoint			AV	X							X
	DJ or DG Flame Failure Alarm			BV	X					X		X
	DJ or DJ Prepurge Alarm			BV	X					X		X
	EMS Cooling Enabled			BV	X	X						
	EMS Damper Minimum Position Setpoint			AV	X	X						
	EMS Dehumidification Enabled			BV	X	X						
	EMS Discharge Air Setpoint			AV		X						
	EMS Discharge Air Setpoint			AV	X							
	EMS Economizer Enabled			BV	X	X						
	EMS Heating Enabled			BV	X	X						
	EMS Secondary Discharge Air Setpoint			AV		X						
	EMS Secondary Discharge Air Setpoint			AV	X							
	EMS Unit Command On/Off			BV	X	X						
	External Cooling Lockout - A			BV	X							X
	Heat Fail Lockout			BV	X					X		X
	Heat Failure Lockout			BV	X					X		X
	Heating Lockout High Ambient Temperature			BV	X							X
	Heating Mode - HS			BV	X							X
	Heating Modulating % Output			AV	X							X
	Heating Status (Electric Heat)			BV	X							X
	LMK or HE Failure Alarm			BV	X					X		X
	Occupied Mode - FS			BV	X							
	Primary Application Mode			MV	X							

System		Type			Access		Alarm States					Log
	Point	Analog	Digital	BACnet	Read	Write	Low	High	Readback	On	Off	
	Secondary Discharge Air Sensor Alarm			BV	X					X		X
	Secondary Discharge Air Temperature (DX Leaving)			AV	X							X
	Sensor Failure Alarm			BV	X					X		X
	Unit On/Off Status			AV	X							X
	Unoccupied Mode - K			BV	X							
	Write To Flash			BV	X	X						
	Supply Air Humidity			AV	X							X
	Return Air Temperature			AV	X							X
	Return Air Humidity			AV	X							X
	Heat Wheel Supply Air Temperature			AV	X							X
	Heat Wheel Exhaust Air Temperature			AV	X							X
	Heat Wheel Exhaust Air Humidity			AV	X							X
	Reheat Temperature			AV	X							X
	Outside Air Damper Status			BV	X							X
	Exhaust Air Damper Status			BV	X							X
	Recirc Air Damper Status			BV	X							X
	Supply Air Fan Status			BV	X							X
	Exhaust Air Fan Status			BV	X							X
	Heat Wheel Status (Rotation Sensor)			BV	X							X
	Compressor #1 Status			BV	X							X
	Compressor #2 Status			BV	X							X
	Compressor #3 Status			BV	X							X
	Heat Wheel Enable			BV	X	X						X
	Smoke Detector Status			BV	X							X
Electric Unit Heaters												
	Space Temperature	X			X		X	X				X
	Enable		X			X						X
Mitsubishi Indoor Units												
	On/Off Setup			BO		X						
	On/Off State			BI	X							X
	Alarm Signal			BI	X					X		X
	Error Code			MI	X			X				X
	Operational Mode Setup			MO		X						
	Operational Mode State			MI	X							X
	Fan Speed Setup			MO		X						
	Fan Speed State			MI	X							X
	Room Temp			AI	X							X
	Set Temp			AV	X	X						X
	Filter Sign			BI	X							X
	Prohibition On/Off			BV	X	X						

System		Type			Access		Alarm States					Log
	Point	Analog	Digital	BACnet	Read	Write	Low	High	Readback	On	Off	
	Prohibition Mode			BV	X	X						
	Prohibition Filter Sign Reset			BV	X	X						
	Prohibition Set Temperature			BV	X	X						
	M-Net Communication State			BI	X					X		X
	System Forced Off			BV	X	X						X
	Air Direction Setup			MO		X						
	Air Direction State			MI	X							X
Exhaust Fans												
	Space Temperature	X			X		X	X				X
	Enable		X			X						X

END OF SECTION 230900

SECTION 260100 - ELECTRICAL GENERAL PROVISIONS

PART 1 - GENERAL

1.1 RELATED DOCUMENTS

A. Drawings and general provisions of the Contract, including General and Supplementary Conditions and Division 1 Specification Sections, apply to this Section.

1.2 SCOPE OF WORK

A. This Section of the Specifications describes the material and installation procedures to be followed for furnishing and installing the electrical equipment and material as outlined and described on the contract drawings and as stated in this Division of the Specifications.

B. Where the word "Contractor" appears in this Division of the Specifications, it applies to the Contractor performing the electrical portion of the work, unless specifically indicated otherwise.

C. The Contractor shall install the systems as specified herein and indicated on the contract drawings and shall furnish all labor, material, tools, scaffolds, erection equipment, services and other items of expense as necessary as a part of this Contract. This Contract further includes placing the systems into operation and properly testing, adjusting, balancing and training the owner's personnel on the use of all items of equipment as specified and as approved by the Architect/Engineer.

1.3 SUPERVISION

A. The Electrical Contractor shall have a designated Supervisor on the job at all times that any electrical work is being installed. This shall include any and all work being accomplished by contractors who are subcontractors to the prime Electrical Contractor.

1.4 DRAWINGS

A. General arrangements of the necessary conduits, feeders, light fixtures, devices, panels, and equipment are indicated on the drawings in diagrammatic form only. Due to the scale of the drawings, offsets, fittings, and accessories may not be shown. Work indicated but having details omitted shall be provided complete to an operating condition with all fittings, wiring, and ancillary equipment and material as required. Where rearrangement is necessary, submit drawings of proposed changes for approval and coordinate and arrange work with consideration to the architectural, structural, mechanical and plumbing drawings, the existing

building conditions and to the work of the various other building trades. Equipment provided under this Division of the Specifications shall be installed in accordance with the recommendations of the equipment or material manufacturer.

1.5 COORDINATION

A. Coordinate the electrical work with the architectural, structural, mechanical and plumbing drawings and work in order to avoid omissions and to eliminate any interferences. Report any discrepancies found, as soon as possible, after discovery, to the Architect/Engineer.

1.6 CODES AND STANDARDS

A. Various recognized codes and standards form a part of these Specifications the same as if written fully herein and shall be followed as minimum requirements. The codes and standards will be referred to by their abbreviated names and are listed below. Reference to these standards shall be understood to mean the latest edition and accumulative supplements which have been adopted by the "Authority Having Jurisdiction," unless noted otherwise.

ADAAG	Americans with Disabilities Act Accessibility Guidelines (July 23, 2004)
ANSI	American National Standards Institute
ASTM	American Society for Testing and Materials
CBMA	Certified Ballast Manufacturers Association
IBC 2009	International Building Code
ICC	International Code Council
ICEA	Insulated Cable Engineers Association
IECC	International Energy Conservation Code
IEEE	Institute of Electrical and Electronics Engineers
NEC 2008	National Electrical Code
NEMA	National Electrical Manufacturers Association
NESC	National Electrical Safety Code
NFPA	National Fire Prevention Association
NFPA 70E	Standard for Electrical Safety in the workplace 2012 Edition
OSHA	The Occupational Safety and Health Act
UL	Underwriters Laboratories, Inc.

B. All equipment, material, apparatus, and work shall conform to the requirements of the NEC. If the Contractor observes that the drawings and specifications are at variance therewith, he shall notify the Architect/Engineer in writing. If the Contractor performs such work contrary to the above referenced rules and regulations and without written acknowledgment or notice thereto, he shall correct this work and bear all cost arising therefrom.

1.7 NOTICES AND FEES

A. Give all required notices, obtain all necessary permits, and pay all required fees, including any fees associated with temporary electrical power services during construction. Utility company fees, which are for the permanent installation of electrical power services, shall be paid for by the Owner.

PART 2 - PRODUCTS

2.1 EQUIPMENT AND MATERIALS

A. See Specification Section 013300, "Submittals," for shop drawing submittal procedures. Submit shop drawings for materials required for this project as indicated herein. Obtain approval from the Architect/Engineer before manufacture is started on any of same. The shop drawings shall show complete details of the various items, wiring diagrams, etc., and shall be submitted in a sufficient number of copies to allow the Engineer to retain one copy. Approved copies of all shop drawings shall be kept on the job site accessible to the Architect/Engineer at all times.

2.2 ACCEPTABLE MANUFACTURERS

A. The following list states specific names of acceptable manufacturers of particular equipment and indicates the types of material on which submittals shall be made:

Submittal
Information
Required:

Light Fixtures . . . . . .Product Data
See light fixture schedule on drawings
NOTE: If substitute light fixtures are submitted for review, provide catalog data on the substitution which will provide all the information required to compare it to the specified product. At a minimum, provide dimensional and weight data, coefficients of utilization (CU) information, and photometrics for both the specified and substitute light fixtures. Submittals which don't include both sets of catalog cuts will be returned marked "Furnish Specified Item.")

Panelboards . . . . . Shop Drawings
General Electric Company
Square D Company
Eaton/Cutler-Hammer

Siemens

Disconnect Switches . . . . . Product Data
General Electric Company
Square D Company
Eaton/Cutler-Hammer
Siemens

Panelboard Surge Suppression Devices . . . . . .Product Data
Liebert/LM Series
Innovative Technology – Protector Series
Square D – Surgelogic Series (Externally mounted only)
General Electric – TR Series (Externally mounted only)

Wiring Devices and Plates . . . . . .Product Data
Hubbell
Leviton
Arrow-Hart
Pass and Seymour

B. The following list states other materials for which product data submittals shall be made:

Conductors (each type)
Conduit (each type)
Dimming Systems
Emergency Battery Backup
LED Drivers
LED Lamps
MC Cable (each type)
Occupancy Sensing Switches (all types)
Photo Electric Cells
Surface-mounted Raceway

C. Catalog numbers and manufacturers are listed as a guide for minimum requirements to be met. Material and equipment of manufacturers other than those listed will be given consideration by the Architect/Engineer providing the material meets the minimum requirements set forth in these Specifications and providing the material or equipment will provide satisfactory performance for the intended installation, does not exceed the dimensions and weight of the specified item and meets the aesthetic performance desired of the specified item. Submittals of other than specified equipment shall have indicated on the specification sheets in the shop drawing submittals each item called for in these Specifications by paragraph and subparagraph numbers and/or letters.

D. See Specification Section 01631 for substitution requirements.

E. Any deviation from the manufacturers listed in the preceding list and /or of those stated in the Contract Documents shall be submitted to the Architect/Engineer for approval in accordance with Specification Section 260500, "Materials and Methods." Facsimile transmission of data for review will not be accepted.

F. The Architect/Engineer will review for approval, only one substitute for each type of material specified in the Division 26 Contract Documents. If the substitute material is not approved, the Contractor shall provide the material by one of the specified manufacturers. Approval of substitute material is at the sole discretion of the Architect/ Engineer and the Contractor shall bear all costs arising therefrom, including any design fees if additional design effort is deemed prudent or necessary by the Architect/Engineer.

G. Only the types of materials specified herein are approved for use on this project. No other material types will be considered.

PART 3 - EXECUTION

3.1 INSTALLATION

A. "Provide," as used on the drawings and in these Specifications, shall mean furnish, install, connect, adjust, test, and place into operation, except where otherwise specifically stated in the contract documents.

B. Provide coordinated electrical systems, equipment, and material complete with auxiliaries and accessories as required for a complete and operable finished project.

C. Run all conduits concealed except where specifically indicated otherwise. Exposed conduit installation other than where indicated shall be approved by the Architect/Engineer prior to installation.

3.2 CLEANING AND PAINTING

A. Remove all dirt, trash, and oil from all raceways, boxes, fittings, cabinets, and panelboards.

B. Protect, to the satisfaction of the Architect/Engineer, all equipment provided against damage during construction. If damage does occur to any materials, refinish, repair, or replace the equipment or material as directed by the Architect/Engineer.

3.3 REPAIR OF EXISTING WORK

A. Repair of existing work, demolition, and modification of existing electrical distribution systems shall be performed as follows:

1. Workmanship: Lay out work in advance.

   a. Exercise care when cutting, channeling, chasing, or drilling of floors, walls, partitions, ceilings, or other surfaces as necessary for proper installation, support, or anchorage of conduit, raceways, or other electrical work. Repair damage to buildings and materials or equipment damaged using skilled craftsmen of the appropriate trades.

2. Existing Concealed wiring to be removed:

   a. Existing concealed wiring to be removed shall be disconnected from its source. Remove conductors and conduits above the ceilings. Where conduit that passes through walls is removed, seal opening in wall with a material that is equal to the material the wall is constructed from.

3. Continuation of Service:

   a. Maintain continuity of existing circuits to remain. Existing circuits shall remain energized unless otherwise indicated. Circuits which are to remain but were disturbed during demolition shall have circuit wiring and power restored back to original condition as approved by the Architect/Engineer. Only materials specified for this project may be used to effect repairs.

3.4 RECORD DRAWINGS

A. Refer to Specification Section 017839 “Project Record Documents”.

3.5 MAINTENANCE MANUALS

A. Refer to Specification Section 017823 “Operation and Maintenance Data”.

END OF SECTION 260100

SECTION 260500 - MATERIALS AND METHODS

PART 1 - GENERAL

1.1 RELATED DOCUMENTS

A. Drawings and general provisions of the Contract, including General and Supplementary Conditions, Division 1 Specification Sections, and Section 260100, "Electrical General Provisions," apply to this Section.

1.2 SCOPE OF WORK

A. Provide all labor, material, tools, scaffolds, erection equipment, services and supplies to fabricate, install, connect, adjust, test, and place in operation the electrical and other systems as called for in these Specifications and as indicated on the Contract Drawings.

B. Properly store and protect all material and equipment until installed.

C. All material and equipment shall be new and of the quality noted or specified. Material, equipment, and work of inferior quality will be rejected. Remove rejected material and equipment shall be removed from the job site immediately upon rejection and replaced and unacceptable work shall be replaced, all by the Contractor at their own expense. The Architect/Engineer will decide upon the quality of material and equipment furnished and of the work performed.

1.3 WARRANTIES

A. The Contractor shall provide the Owner with a one-year, unlimited warranty (material and labor) on all work accomplished and materials provided under Division 26, including all components thereof except as otherwise noted herein. The warranty start date is the date of project "Substantial Completion" as determined by the Architect.

PART 2 - PRODUCTS

2.1 MATERIAL

A. Electrical material furnished under these Specifications shall be new and listed by UL and shall bear the UL label where labeling service is available for the type of material provided for this project.

2.2 RACEWAYS

A. Raceways shall be of the size indicated or as required by the NEC; whichever is the larger; except where larger conduits are specified on the Contract Drawings. Raceways shall be 1/2" minimum.

B. Raceways shall be provided for all electrical systems indicated on the drawings unless specifically indicated otherwise. Raceways shall be hot-dip galvanized rigid steel conduit (GRS), electrical metallic tubing (EMT), flexible metal conduit, or intermediate metallic conduit (IMC). Flexible metal conduit in kitchen areas and outdoors shall be liquid tight. Schedule 40 PVC conduit may be used only below grade, under concrete slabs-on-grade and other locations where specifically indicated.

2.3 CONDUCTORS

A. Conductors shall be of the American Wire Gauge size indicated on the contract drawings or specified herein.

B. All conductors shall be copper.

2.4 OUTLETS

A. Outlet and junction boxes shall be of one-piece galvanized construction of a type and size applicable for use in the location indicated on the contract drawings and as required by the NEC.

B. Locations of outlets for lighting, devices, power, and equipment are indicated on the contract drawings. Owing to the small scale of the drawings, it is not possible to indicate the exact location. Examine the architectural, structural, mechanical, and plumbing drawings and finish conditions and arrange work as required to meet such conditions to the approval of the Architect/Engineer.

C. Verify the exact swing of doors and locations of furniture and built-in cabinetry prior to installing outlets for switches and receptacles and make the necessary adjustments in location and mounting height of same to avoid conflicts at no additional cost. Coordinate outlets with change orders, addenda, and job site differences.

2.5 FUSES

A. All fuses shall be provided by the Electrical Contractor.

B. Fuses shall be as follows:

1. General: All fuses must carry the UL inspected label. All fuses shall be plainly marked with ampere rating, voltage

rating, interrupting capacity when greater than 10,000 Amperes and current limiting where it applies.

2. Interrupting Capacity: Each fuse shall be capable of safely interrupting the maximum short-circuit current available at the point in the circuit where installed.
3. Coordination: Service fuses and the fuses installed in feeder circuits shall be coordinated to provide a selective system of over-current protection.

C. Main, feeder, and branch circuit fuses shall be as follows:

1. Circuits 0 to 600 amperes shall be protected by BUSSMANN Low-Peak, Limitron, or Fusetron (K-5, 200,000 I/C) Fuses rated as indicated on the drawings.
2. Motor Circuits: All motors rated 480 volts or less shall be protected by dual-element fuses rated not in excess of 175% and not less than 125% of motor nameplate rating or as indicated. Larger motors as indicated on drawings where fuse gaps are larger than size required for proper rating of fuse, install "all-metal" fuse reducers.

2.6 LABELING

A. Label all disconnect switches and panelboards provided under Division 26 of these Specifications.

B. Labels shall be machine engraved, laminated, Bakelite, nameplate type. Labels shall have black faces with white letters.

C. Size of labels shall be based on the required lettering and lettering size. The following are the minimum requirements for each type of label:

1. Panelboards: First line of label shall state name of panel as shown on the drawings. Second line shall state from where the panel is fed. Lettering shall be 3/8" high.

   Example: Panel L-100
   Fed from MDS
   Circuit # _____

2. Disconnect Switches: Disconnect switches shall be labeled in 1/4" high letters. First line shall state what the switch is feeding. Second line shall state from which circuit and panel the switch/contactor is fed.

D. Attach labels with a minimum of two rivets or sheet metal screws. Adhesive-backed labeling will not be accepted.

2.7 PULL BOXES

A. Install pull boxes at all necessary points, whether indicated on the drawings or not, to prevent injury to conductor insulation or other damage that might result from pulling resistance or for other reasons necessary for proper installation. Minimum dimensions shall not be less than the NEC requirements and shall be increased if necessary for practical reasons or where required to fit the job condition.

B. Above grade pull boxes shall be constructed of galvanized sheet steel, code gauge, except that not less than 12 gauge shall be used for any box. Where boxes are used in connection with exposed conduit, plain covers attached to the box with a suitable number of countersunk flathead machine screws may be used.

C. All junction and pull box covers shall be labeled indicating the circuits contained therein in a manner that will prevent unintentional interference with circuits during testing and servicing. For example: “HE1-13.” See Specification Section 260534 for additional labeling requirements.

2.8 DISCONNECT SWITCHES

A. Disconnect switches shall conform to governing industry NEMA standards. They shall be listed by UL. Disconnect switches shall be NEMA standard HD, quick-make, quick-break type.

B. Where disconnect switches are indicated or required by the NEC to be weatherproof, furnish with NEMA 3R enclosures.

2.9 BRANCH CIRCUITS

A. The branch circuit wiring has been designed to utilize the advantages of multi-wire distribution and shall be installed substantially as indicated on the drawings. Major changes in the grouping or general routing of the branch circuits require prior approval in writing from the Architect/Engineer.

B. The number of conductors in each run of conduit is indicated on the drawings, but where there is a conflict between the number of wires indicated and the actual number required as determined by the functional requirements of the connected load, or where the number of wires was inadvertently omitted from the drawings, the correct number and size of wires as determined by the functional requirements of the connected load shall govern and be provided at no additional cost.

2.10 MOTOR DISCONNECTING MEANS

A. Provide a disconnecting means for each motor when required by the NEC even if not indicated on the drawings. If required disconnects are not shown on the drawings, a circuit breaker in a panelboard or horsepower rated switch will be acceptable as a disconnecting means, if readily accessible and if located within sight of the motor and in compliance with all codes. A quick-make and quick-break general use tumbler or snap switch will be acceptable for capacities of 20 amperes or less and 300 volts and less, provided the ampere rating of the switch is at least double the rating of the equipment controlled. Switches of 30- to 400-ampere capacity shall be of the enclosed, quick-make and quick-break type, heavy duty, horsepower rated. Switches shall disconnect all ungrounded conductors and shall disconnect grounded conductors if required by the NEC to do so. Switches shall be fused when required by the NEC, the manufacturer of the equipment served, UL, or the local authority having jurisdiction whether indicated or not.

2.11 CABLE TIES

A. Provide cable ties in the length required. Standard, indoor cable ties shall be 7.9 inches in length minimum, 0.19 inches in width and 0.47 inches thick. The tensile strength shall be 50 pounds minimum and the maximum bundle diameter shall be 2 inches. Standard cable ties shall be black in color. Plenum rated cable ties shall be 6 inches in length minimum, .075 inches in width and 0.1 inches thick. The tensile strength shall be 50 pounds minimum and the maximum bundle diameter shall be 1.5 inches. Plenum rated cable ties shall be maroon in color.

PART 3 - EXECUTION

3.1 INSTALLATION

A. Install material in a first-class and workmanlike manner to the satisfaction of the Architect/Engineer.

END OF SECTION 260500

THIS PAGE LEFT INTENTIONALLY BLANK

SECTION 260518 - METAL CLAD CABLES

PART 1 - GENERAL

1.1 RELATED DOCUMENTS

A. Drawings and general provisions of the Contract, including General and Supplementary Conditions, Division 1 Specifications Sections, and Section 260100, "Electrical General Provisions," apply to this Section.

1.2 DESCRIPTION

A. Metal clad cables may be utilized for branch circuit wiring in walls and above lay-in-tile ceilings only and installed in accordance with NEC 330.

1.3 REFERENCES

A. Metal clad cable shall be constructed in strict accordance with Underwriters Laboratories, Inc. Standard for Metal Clad Cables, UL 1569. The cable shall bear the UL label and the manufacturer's "E" number.

B. Further, the product shall have passed UL Test Procedure 1479, Through Penetration Fire Rating, and meet NEC 300.22 Wiring in Ducts, Plenums and Other Air-Handling Spaces.

PART 2 - PRODUCTS

2.1 CONDUCTORS

A. Provide electrical wires, cables, and connectors of manufacturer's standard materials, as indicated by published product information; designed and constructed as recommended by manufacturer for a complete installation and for application indicated. Except as otherwise indicated, provide copper conductors with conductivity of not less than 98% at 20°C (75°F).

B. Wiring sizes #12 and #10 AWG shall be solid. Larger sizes may be stranded.

PART 3 - EXECUTION

3.1 SPLICES

A. Splicing connectors must have a metal spring that is free to expand. The spring must be suitably coated to resist corrosion. Each connector size must be listed by UL for the intended purpose. The connectors must be suitably

color coded to assure that the proper size is used on the wire combinations to be spliced. Each connector must be capable of withstanding 105°C ambient temperatures. The connectors must be compatible with all common rubber and thermoplastic wire insulations. They must also be capable of making copper-to-copper, copper-to-aluminum, and aluminum-to-aluminum splices. At the Contractor's option, self-strapping electrical tap connectors may be used in wire size and voltage range of the connector. When tape is required for splices, SCOTCHBRAND No. 33, or approved equal, shall be used. Use plastic tape on PVC and its copolymers and rubber-based pressure-sensitive adhesive. The tape must be applicable at temperatures ranging from 0°F through 100°F without loss of physical or electrical properties. The tape must not crack, slip, or flag when exposed to various environments indoor or outdoor. The tape must also be compatible with all synthetic cable insulations as well as cable splicing compounds.

B. Make splices in conductors #8 AWG and larger with solderless connectors, with molded composition covers.

C. Connect conductors #12 and #10 AWG with pre-insulated spring connectors rated at not less than 105°C. Connectors shall be UL approved for fixture and pressure work. Connectors shall be 3M CO. SCOTCHLOK, Type Y, R, and B, or approved equal.

D. Join or terminate conductors #8 AWG and larger with pressure-type copper connectors and properly tape.

E. All branch circuit and control wiring shall be color coded. The color shall be integral with sheath for sizes #12, #10, and #8 AWG. Larger size wire and cable shall be color coded with a minimum 1/2" wide, colored, plastic tape strip. Place strips a minimum of 6" on center anywhere the conductors are accessible and visible. Wire and cable shall be color coded to match the existing color coding if an existing color code is present. If there is no existing color code, provide the following:

<u>120/208-Volt System</u>
Phase A - black
Phase B - red
Phase C - blue
Neutral - white
Ground - green

F. Advise the Architect/Engineer if the color coding provided by the utility company differs from that indicated above.

3.2 SUPPORT OF CABLE

A. Cable shall be supported at intervals as required by the NEC. Contractor shall supply the necessary additional bracing of an approved material to support the cable. Where long runs of cable need to be supported, the Contractor shall install a trapeze to support the cable.

B. MC cable shall be located same as required for installation of conduit unless otherwise noted elsewhere in the Contract Documents.

END OF SECTION 260518

THIS PAGE LEFT INTENTIONALLY BLANK

SECTION 260519 - CONDUCTORS

PART 1 - GENERAL

1.1 RELATED DOCUMENTS

A. Drawings and general provisions of the Contract, including General and Supplementary Conditions, Division 1 Specification Sections, and Section 260100, "Electrical General Provisions," apply to this Section.

1.2 SCOPE OF WORK

A. Feeder and branch circuit wiring shall conform to the requirements of the NEC, and shall meet all relevant ASTM specifications.

PART 2 - PRODUCTS

2.1 CONDUCTORS

A. Provide electrical wires, cables, and connectors of manufacturer's standard materials, as indicated by published product information; designed and constructed as recommended by manufacturer for a complete installation and for the application indicated. Except as otherwise indicated, provide copper conductors with a conductivity of not less than 98% at a temperature of 20°C (75°F).

B. Provide factory-fabricated wires of sizes, ampacity ratings, and materials for applications and services indicated. Where not indicated, provide proper wire selection as determined by installer to comply with project's installation requirements, the NEC, and NEMA standards. Select from the following UL types those wires with construction features which fulfill project requirements:

1. Type THWN or THHN: Max operating temperature not to exceed 90°C (194°F) (THHN) in dry locations, or 75°C (167°F) (THWN) in wet or dry locations. Insulation, flame-retardant, moisture- and heat-resistant, thermoplastic; outer covering, nylon jacket; conductor, annealed copper.
2. Type XHHW: For dry and wet locations; max operating temperature 90°C (194°F) for dry locations, and 75°C (167°F) for wet locations. Insulation, flame-retardant, cross-linked synthetic polymer; conductor, annealed copper.

C. Unless specified otherwise, power and lighting conductors shall be 600 volt, Type THWN/THHN, or XHHW.

D. Where light fixtures require 90°C (194°F) conductors, provide only conductors with 90°C (194°F) insulation.

E. Conductors shall be continuous from outlet to outlet with splices made only in pull boxes, junction boxes, and outlet boxes.

F. Do not use wire smaller than #12 AWG for power or lighting wiring.

G. Wiring sizes #12 and #10 AWG shall be solid. Larger sizes may be stranded.

PART 3 - EXECUTION

3.1 SPLICES

A. Splicing connectors must have a metal spring that is free to expand. The spring must be suitably coated to resist corrosion. Each connector size must be listed by UL for the intended purpose. The connectors must be suitably color coded to assure that the proper size is used on the wire combinations to be spliced. Each connector must be capable of withstanding 105°C ambient temperatures. The connectors must be compatible with all common rubber and thermoplastic wire insulations. They must also be capable of making copper-to-copper, copper-to-aluminum, and aluminum-to-aluminum splices. At the Contractor's option, self-strapping electrical tap connectors may be used in wire size and voltage range of the connector. When tape is required for splices, SCOTCHBRAND No. 33, or approved equal, shall be used. Use the plastic tape on PVC and its copolymers and rubber-based pressure-sensitive adhesive. The tape must be applicable at temperatures ranging from 0°F through 100°F without loss of physical or electrical properties. The tape must not crack, slip, or flag when exposed to various environments indoor or outdoor. The tape must also be compatible with all synthetic cable insulations as well as cable splicing compounds.

B. Make splices in conductors #8 AWG and larger with solderless connectors, with molded composition covers.

C. Connect conductor sizes #12 and #10 AWG with pre-insulated spring connectors rated at not less than 105°C. Connectors shall be UL approved for fixture and pressure work. Connectors shall be 3M CO. SCOTCHLOK, Type Y, R, and B, or approved equal.

D. Join or terminate conductors #8 AWG and larger with pressure-type copper connectors and properly tape.

E. All branch circuit, feeder, and control wiring shall be color coded. The color shall be integral with sheath for sizes #12, #10, and #8 AWG. Larger size wire and cable shall be color coded with a minimum 1/2" wide, colored, plastic tape strip. Place strips a minimum of 6" on center anywhere the conductors are accessible and visible. Wire and cable shall be color coded to match the existing color coding if an existing color code is present. If there is no existing color code, provide the following:

<u>120/208-Volt System</u>
Phase A - black
Phase B - red
Phase C - blue
Neutral - white
Ground - green

END OF SECTION 260519

THIS PAGE LEFT INTENTIONALLY BLANK

SECTION 260526 - GROUNDING

PART 1 - GENERAL

1.1 RELATED DOCUMENTS

A. Drawings and general provisions of the Contract, including General and Supplementary Conditions, Division 1 Specification Sections, and Section 260100, "Electrical General Provisions," apply to this Section.

1.2 SCOPE OF WORK

A. Provide grounding for service, conduits, motor frames, metal casings, receptacles, and solid neutral, and as required by NEC Article 250.56 as a minimum. Resistance to ground shall not exceed 25 ohms.

PART 2 - PRODUCTS

2.1 GROUND WIRE

A. Provide a green insulated ground wire, sized per the NEC, in all conduits, junction boxes, and pull boxes.

PART 3 - EXECUTION

3.1 INSTALLATION

A. Connect grounding conductors to the panelboard equipment ground bus and not to the panelboard neutral bus. Also connect grounding bushings to the ground bus. Connect the neutral bus only to the system neutral wire. Provide a bonding wire between the equipment ground bus and the neutral bus in the main distribution equipment only. The grounding system (conduit, cabinets, enclosures, and grounding conductors) and the grounded system (neutral conductors and service equipment ground) shall be separate and independent systems, except at the main distribution equipment.

B. Test resistance to ground and submit readings to the Architect/Engineer for review. Include the date and time of the test and the name of the individual performing the test.

END OF SECTION 260526

THIS PAGE LEFT INTENTIONALLY BLANK

SECTION 260529 - SUPPORTING DEVICES

PART 1 - GENERAL

1.1 RELATED DOCUMENTS

A. Drawings and general provisions of the Contract, including General and Supplementary Conditions, Division 1 Specification Sections, and Section 260100, "Electrical General Provisions," apply to this Section.

1.2 SCOPE OF WORK

A. Extent of supports, anchors, sleeves, and seals is indicated in other Division 26 Sections.

B. Types of supports, anchors, sleeves, and seals specified in this Section include the following:

C-clamps
I-beam clamps
One-hole conduit straps
Two-hole conduit straps
Round steel rods
Expansion anchors
Toggle bolts
Wall and floor seals

C. Supports, anchors, sleeves, and seals furnished as part of factory-fabricated equipment are specified as part of equipment assembly in other Division 26 Sections.

1.3 QUALITY ASSURANCE

A. Furnish supporting devices manufactured by firms regularly engaged in manufacture of supporting devices of types, sizes, and ratings required.

B. Comply with the requirements of the NEC, as applicable to construction and installation of electrical supporting devices.

C. Comply with applicable requirements of ANSI/NEMA FB1, "Fittings and Supports for Conduit and Cable Assemblies."

D. Comply with NECA "Standard of Installation" pertaining to anchors, fasteners, hangers, supports, and equipment mounting.

E. Provide electrical components which are UL-Listed and labeled.

PART 2 - PRODUCTS

2.1 MANUFACTURED SUPPORTING DEVICES

A. Provide supporting devices complying with manufacturer's standard materials, design, and construction in accordance with published product information and as required for a complete installation, and as herein specified. Where more than one type of device meets indicated requirements, selection is installer's option.

B. Provide supporting devices of types, sizes, and materials required, and having the following construction features:

1. Reducing Couplings: Steel rod reducing coupling, 1/2" by 5/8"; galvanized steel; approx. 16 pounds per 100 units.
2. C-Clamps: Galvanized steel; 1/2" rod size; approx. 70 pounds per 100 units.
3. I-Beam Clamps: Galvanized steel, 1-1/4" by 3/16" stock; 3/8" cross bolt; flange width 2"; approx. 52 pounds per 100 units.
4. One-hole Conduit Straps: For supporting metal conduit through 3/4" galvanized steel; approx. 7 pounds per 100 units.
5. Two-hole Conduit Straps: For supporting metal conduit above 3/4" galvanized steel; 3/4" strap width; and 2-1/8" between center of screw holes.
6. Hexagon Nuts: For 1/2" rod size; galvanized steel; approx. 4 pounds per 100 units.
7. Round Steel Rod: Galvanized steel; 1/2" dia.; approx. 67 pounds per 100 feet.
8. Offset Conduit Clamps: For supporting 2" rigid metal conduit; galvanized steel; approx. 200 pounds per 100 units.

C. Provide anchors of types, sizes, and materials required and having the following construction features:

1. Expansion Anchors: 1/2"; approx. 38 pounds per 100 units.
2. Toggle Bolts: Springhead; 3/16" by 4"; approx. 5 pounds per 100 units.

D. Provide sleeves and seals of types, sizes, and materials required, and having the following construction features:

1. Provide factory-assembled, watertight wall and floor seals suitable for sealing around conduit, pipe or tubing passing through concrete floors and concrete block walls.

Construct with steel sleeves, malleable-iron body, neoprene sealing grommets and rings, metal pressure rings, pressure clamps and cap screws.

E. Provide U-channel strut system for supporting electrical equipment, 16-gauge hot-dip galvanized steel of sizes required; construct with 9/16" dia. holes, 8" o.c. on top surface, and with the following fittings which mate and match with U-channel:

Fixture hangers
Channel hangers
End caps
Beam clamps
Wiring stud
Rigid conduit clamps
Conduit hangers
U-bolts

PART 3 - EXECUTION

3.1 INSTALLATION OF SUPPORTING DEVICES

A. Install hangers, anchors, sleeves, and seals as indicated in accordance with manufacturer's published instructions and with recognized industry practices to ensure supporting devices comply with the requirements of the NEC, NECA, and ANSI/NEMA for installation of supporting devices.

B. Coordinate with other electrical work, including outlet box, raceway and wiring work, as necessary to interface installation of supporting devices with other work.

C. Install hangers, supports, clamps, and attachments to support conduit and outlet boxes properly from building structure. Arrange for grouping of parallel runs of horizontal conduits to be supported together on trapeze-type hangers where possible. Install supports with maximum spacings indicated.

D. Tighten sleeve seal nuts until sealing grommets have expanded to form watertight seal.

END OF SECTION 260529

THIS PAGE LEFT INTENTIONALLY BLANK

SECTION 260533 - RACEWAYS

PART 1 - GENERAL

1.1 RELATED DOCUMENTS

A. Drawings and general provisions of the Contract, including General and Supplementary Conditions, Division 1 Specification Sections, and Section 260100, "Electrical General Provisions," apply to this Section.

1.2 SCOPE OF WORK

A. Run all conduit concealed, except conduit may be run exposed in mechanical rooms, locations where specifically indicated, and spaces with exposed construction as approved by the Architect/Engineer.

B. Provide a conduit system complete with fittings and hangers as specified herein and as required by the NEC. Run all electrical wiring systems above 24 Volts in conduit unless specifically indicated otherwise.

C. Install conduit as a complete system without wiring and continuous from outlet to outlet and from fitting to fitting, mechanically and electrically connected to all boxes, fittings, and wireways, and grounded in accordance with the NEC.

D. Cap ends of all conduit promptly upon installation with plastic pipe caps. Caps shall remain until wiring is ready to be installed. Taping the ends of conduits is not acceptable.

E. Size conduit to equal or exceed the minimum requirements of the NEC (except where sizes are specifically indicated on the drawings and in these specifications).

F. Verify exact swing of doors, prior to installing conduit for switches. Coordinate switches with the Architect's plans, change orders, addenda, and job site differences and make the necessary adjustments to avoid conflicts at no additional cost.

G. Coordinate the routing of conduit with other trades to avoid conflicts with structural members, piping, ductwork, and other job site conditions.

PART 2 - PRODUCTS

2.1 CONDUIT

A. Minimum size conduit shall be 1/2" unless noted or indicated otherwise on drawings. Use larger sizes as required by the NEC to accommodate the number and sizes of wires contained therein.

B. Conduit concealed in walls or above ceilings shall be rigid steel (GRS), electrical metallic tubing (EMT), or intermediate metallic conduit (IMC). Flexible metal conduit may be used above accessible ceilings only.

C. GRS, EMT and IMC shall be UL approved, hot-dip, high-strength, galvanized steel.

D. Flexible metal conduit shall be galvanized, continuous spiral, single strip type. In areas subject to moisture and where specifically indicated, flexible metal conduit shall have a plastic covering in accordance with NEC Article 350. Fittings shall be standard UL approved with ground connector. Watertight connectors shall be used with plastic-covered conduit. All flexible metal conduit installed outdoors shall be plastic covered. The maximum length for flexible metal conduit is 72" unless as otherwise indicated.

E. Conduit may not be run in the flutes of metal roof decking, and may not be attached to any part of metal roof decking.

2.2 FITTINGS

A. All conduit entering or leaving panelboards, cabinets, outlet boxes, pull boxes, or junction boxes shall have lock nuts and bushings, except provide insulated throat connectors on EMT conduit 3/4" and 1". Rigid steel conduit shall have a lock nut both inside and outside of the enclosure entered. Install bushings on the ends of IMC conduit and EMT conduit larger than 1". Insulating bushings shall be OZ Type A for GRS and IMC, and Type B for EMT. Conduit entering enclosures through concentric knockouts shall have grounding-type bushings with copper bond wire to enclosure.

B. Provide expansion fittings where conduits cross building expansion joints. Expansion fittings shall be OZ Type AX with OZ Type BJ bonding jumper.

C. Fittings for rigid conduit shall be threaded type.

D. Fittings for EMT shall be UL-approved, steel, set screw type.

2.3 JUNCTION BOXES

A. Use junction boxes on exposed conduit work for changes in direction of conduit runs and breaking around beams and columns.

B. Furnish covers and gaskets with the junction boxes where installed in damp or wet locations.

C. Label all junction and pull box covers indicating the circuits contained therein in a manner that will prevent unintentional interference with circuits during testing and servicing. For example: “HE1-13.” See Specification Section 260534 for labeling requirements.

2.4 PIPE SLEEVES

A. Provide pipe sleeves where conduits larger than 2" pass through walls. Contractor shall be responsible for proper and permanent location. Conduit shall not be permitted to pass through footings, beams, or ribs, unless indicated and/or approved. Coordinate pipe sleeve locations with all other trades affected.

B. Install pipe sleeves and properly secure in place with grout where conduit passes through masonry or concrete and at all fire-rated assemblies. Pipe sleeves shall be of a sufficient diameter to provide approximately 1/4" clearance all around the conduit. Fill void between conduit and sleeve with mineral wool to prevent sound transmission. Pipe sleeves in foundation walls shall be cast iron, 4" larger in diameter than the conduit installed. Pipe sleeves in walls, floors, and partitions shall be Schedule 40 black steel pipe. Extend sleeves above floor at least 1", pack space around conduit with fireproof material, and make watertight. Pipe sleeves passing through firewalls, smoke partitions, fire partitions, or floors shall be sealed with a UL-rated system appropriate for the specified rating.

PART 3 - EXECUTION

3.1 INSTALLATION

A. Install conduit concealed above ceilings, except conduit may be run exposed in mechanical and electrical equipment rooms. Maintain a minimum clear distance of 6" from parallel runs of flues, steam, or hot water pipes. Do not run conduit horizontally in concrete slabs.

B. Use flexible metal conduit (minimum 18" in length, maximum 72" in length) for connections to all motors and any equipment subject to vibration.

C. Group conduit so it is uniformly spaced, where straight and at turns. Make bends and offsets (where unavoidable) with a hickey or bending machine.

D. Ream GRS and IMC conduit after threading to remove all burrs.

E. Securely fasten conduit to outlets, junction boxes, and pull boxes to effect firm electrical contact. Join conduit with approved couplings. Running threads are not allowed.

F. Exercise care to avoid condensation pockets in the installations. Keep conduit, fittings, and boxes free from foreign matter of any kind, before, during, and after installation.

G. Do not use EMT outdoors, in wet locations, in kitchens, or in first floor mechanical/electrical equipment rooms below 48" above finished floor level. EMT is acceptable for use on mechanical mezzanines and in mechanical rooms above the first floor.

H. Support exposed runs of conduit in accordance with N.E.C. 342, 344, 348, 350 and 358 and parallel or perpendicular to walls, structural members, or intersections of vertical planes and ceilings with right angle turns consisting of fittings or symmetrical bends. Support conduit within one foot of all changes in direction and on each side of the change.

I. Supports shall be wall brackets, trapeze, strap hanger, or pipe straps, secured to hollow masonry with toggle bolts; to brick and concrete with expansion bolts; to metal surfaces with machine screws; and to wood with wood screws.

J. Use explosive drive equipment to make connections where the use of this equipment is beneficial, and is subject to strict compliance with safety regulations and approved by the Owner.

K. Wooden plugs inserted in masonry and the use of nails as fastening media are prohibited.

L. Do not support conduit from lay in tile ceilings grids, ceiling grid hangers, or lay on ceiling tiles.

M. Paint conduit installed exposed to match the surface on which attached if the surface is painted. Conduit installed on unpainted surfaces need not be painted.

N. Install and support conduit from the underside of the upper chord in bar joist construction.

O. Do not support conduit from or attach outlet or junction boxes to metal roof decks.

P. Seal openings in floors where conduits penetrate vertically through with a clear silicon sealant to prevent liquids and insects from passing through.

Q. Where conduits penetrate vertically through fire-rated floors, seal the conduits with a UL-Listed, water-resistant fire stop material with a rating equal to or greater than the rating of the penetrated floors.

END OF SECTION 260533

THIS PAGE LEFT INTENTIONALLY BLANK

SECTION 260534 - ELECTRICAL BOXES AND FITTINGS

PART 1 - GENERAL

1.1 RELATED DOCUMENTS

A. Drawings and general provisions of the Contract, including General and Supplementary Conditions, Division 1 Specification Sections, and Section 260100, "Electrical General Provisions," apply to this Section.

1.2 SCOPE OF WORK

A. Furnish and install all junction boxes of a type and size applicable for use in the location indicated on the drawings and where required by the NEC.

B. Exercise special care in the location of outlet and junction boxes in order that the hanging or recessing of light fixtures will not be obstructed by piping or ductwork installed by other trades. To this end, coordinate the work with representatives of the other trades involved and by reference to the architectural, structural, mechanical and plumbing drawings.

PART 2 - PRODUCTS

2.1 OUTLET BOXES

A. Outlet boxes shall be sheet steel, zinc coated, or cadmium plated.

B. Provide existing and new outlet boxes installed but not used, including data outlets, with blank coverplates matching those provided on adjacent outlets.

C. Size boxes as follows:

1. Switch and Receptacle Outlet Boxes: Provide single gang outlet boxes 1-1/2" deep unless required to be larger. Provide extra deep boxes where required.
2. Fixture Outlets in Ceiling: 4" octagonal, minimum. Where required to accommodate larger conduit or a larger number of wires: 4-11/16" by 2-1/8" deep.
3. One-piece multi-gang boxes for use where two or more switches or receptacles are located side by side: 2-1/8" deep. Sectionalized boxes will not be allowed.
4. Where larger size boxes are required or called for, they shall be similar in all other respects to the types specified above.

D. Provide boxes located above suspended ceilings with galvanized steel covers, with openings or knockouts as required for type of service.

2.2 PULL BOXES AND JUNCTION BOXES

A. Install pull boxes and junction boxes where required for changes in direction, at junction points, and where needed to facilitate wire pulling.

B. Size boxes in accordance with the requirements of the NEC.

C. Boxes shall be constructed of 12-gauge minimum hot-rolled sheet steel and shall be hot-dip galvanized inside and outside to match the conduit. Boxes shall have removable covers.

D. Label the front face of the cover on each box with indelible black marker indicating the number of each circuit contained in or running through the box. In areas where exposed construction is the final finished condition and conduit and junction boxes are called out to be painted, label the inside face of the covers.

PART 3 - EXECUTION

3.1 INSTALLATION

A. Check all door swings and coordinate with all furniture, built-in equipment, and cabinetry prior to roughing-in conduit and boxes for switches and receptacles. Make necessary adjustments in the location of same to avoid conflicts as approved by the Architect/Engineer at no additional cost to the Owner.

B. Mounting heights of outlets in tile or unplastered masonry shall be varied plus or minus to the nearest block joint so the bottom or top of the box rests on a block joint. Install outlet boxes in the same space at the same height above finished floor unless indicated or required to be otherwise.

C. Check the location of all wall outlets prior to roughing-in conduit to verify that the outlet will clear any wall fixtures, shelving, work tables, etc., that exist or will be installed. Make necessary adjustments in the location of wall outlets to avoid conflicts as approved by the Architect and at no additional cost to the Owner.

D. Prior to roughing-in conduit, coordinate with other trades and the Owner regarding all equipment requiring electrical connections. Required adjustments to the conduit and wire sizes shall be made at no additional cost.

E. Conduit installation shall be rigid and secure, and, where necessary, angle iron (1" by 1" by 1/4" or larger) shall be provided to facilitate adequate mounting.

F. Install electrical boxes and fittings in accordance with manufacturer's published instructions, applicable requirements of the NEC and NECA "Standard of Installation," and in accordance with recognized industry practices to fulfill project requirements.

G. Coordinate installation of electrical boxes and fittings with wire/cable, wiring devices, and raceway installation work.

H. Provide weatherproof "while-in-use" outlet covers for interior and exterior locations exposed to weather or moisture.

I. Provide knockout closures to cap unused knockout holes where blanks have been removed in panel cans, terminal cabinet backboxes, junction boxes, outlet boxes and pull boxes.

J. Install electrical boxes in those locations which ensure ready accessibility to enclosed electrical wiring.

K. Fasten electrical boxes firmly and rigidly to substrates or structural surfaces to which attached.

L. Subsequent to installation of boxes, protect boxes from construction debris and damage.

M. Upon completion of installation work, properly ground all electrical boxes.

N. Do not mount boxes to metal roof decking.

END OF SECTION 260534

THIS PAGE LEFT INTENTIONALLY BLANK

SECTION 262416 - PANELBOARDS

PART 1 - GENERAL

1.1 RELATED DOCUMENTS

A. Drawings and general provisions of the Contract, including General and Supplementary Conditions, Division 1 Specification Sections, and Section 260100, "Electrical General Provisions," apply to this Section.

1.2 SCOPE OF WORK

A. Extent of panelboard, load center, and enclosure work, including cabinets and cutout boxes, is indicated by drawings and schedules.

B. Refer to other Division 26 Sections for cable/wire, connectors, and electrical raceway work required in conjunction with panelboards and enclosures; not work of this Section.

1.3 QUALITY ASSURANCE

A. Comply with the requirements of the NEC, as applicable to installation of panelboards, cabinets, and cutout boxes. Comply with the NEC requirements pertaining to installation of wiring and equipment in hazardous locations.

B. Comply with applicable requirements of UL 67, "Electric Panelboards," and UL 50, UL 869, UL 486A, UL 486B, and UL 1053 pertaining to panelboards, accessories, and enclosures. Provide units which are UL-Listed and labeled.

C. Comply with NEMA 250, "Enclosures for Electrical Equipment (1,000 Volts Maximum)," and NEMA PB1, "Instructions for Safe Installation, Operation, and Maintenance of Panelboards Rated 600 Volts or Less."

PART 2 - PRODUCTS

2.1 ACCEPTABLE MANUFACTURERS

A. Except as otherwise indicated, provide panelboards, enclosures, and ancillary components of types, sizes, and ratings indicated, which comply with manufacturer's standard materials; design and construction in accordance with published product information; equip with proper number of unit panelboard devices as required for complete installation. Where types, sizes, or ratings are not indicated, comply with the NEC, UL, and established industry standards for those applications indicated. Series rating of circuit breakers is acceptable.

B. Provide dead-front, safety-type, power distribution panelboards as indicated, with panelboard switching and protective devices in quantities, ratings, types, and arrangement shown; with anti-turn solderless pressure-type main lug connectors approved for copper or aluminum conductors. Specific breaker placement is required in panelboards to match the breaker placement indicated in the panelboard schedule on the drawings. Equip with copper busbars with not less than 98% conductivity and with full-sized neutral bus. Provide suitable lugs on neutral bus for outgoing circuits requiring neutral connections. Provide molded-case main and branch circuit breaker types for each circuit, with toggle handles that indicate when tripped. Where multiple-pole breakers are indicated, provide with common trip so an overload on one pole will trip all poles simultaneously. Provide panelboards with bare uninsulated grounding bars suitable for bolting to enclosures. Select enclosures fabricated by same manufacturer as panelboards, which mate properly with panelboards. Branch mounted main circuit breakers are not acceptable. Provide bottom mounted main breakers for panelboards fed from below. Provide top mounted main breakers for panelboards fed from above.

C. Provide galvanized sheet-steel cabinet-type enclosures, in sizes and NEMA types as indicated, code gauge, minimum 16-gauge thickness. Construct with multiple knockouts and wiring gutters. Provide fronts with adjustable trim clamps, and doors with flush locks and keys. All panelboard enclosures shall be keyed alike. Equip with interior circuit directory frame and card with clear plastic covering. Provide baked gray enamel finish over a rust-inhibitor coating. Design enclosures for flush mounting unless otherwise indicated. Provide enclosures which are fabricated by same manufacturer as panelboards, which mate properly with panelboards to be enclosed.

D. Provide panelboard accessories and devices, including but not necessarily limited to circuit breakers and ground-fault protection units, as recommended by panelboard manufacturer for ratings and applications indicated.

PART 3 - EXECUTION

3.1 INSPECTION

A. Examine areas and conditions under which panelboards and enclosures are to be installed, and notify the General Contractor, in writing, of conditions detrimental to proper completion of work. Do not proceed with work until unsatisfactory conditions have been corrected.

B. Install panelboards and enclosures as indicated, in accordance with manufacturer's published instructions, applicable requirements of the NEC

and NECA "Standard of Installation," and in compliance with recognized industry practices to ensure that products fulfill requirements.

C. Coordinate installation of panelboards and enclosures with raceway installation work.

D. Tighten connectors and terminals, including screws and bolts, in accordance with equipment manufacturer's published torque tightening values for equipment connectors. Where manufacturer's torquing requirements are not indicated, tighten connectors and terminals to comply with tightening torques specified in UL 486A and UL 486B.

E. Anchor enclosures firmly to walls and structural surfaces, ensuring that they are permanently and mechanically secure.

F. Provide properly wired electrical connections within enclosures.

G. Provide a typed circuit directory card for each panelboard upon completion of installation work. Indicate load served and room number(s). Use final room numbers obtained from the Architect or Owner, not construction room numbers as shown on the drawings.

3.2 GROUNDING

A. Provide equipment grounding connections for all panelboards. Tighten connections to comply with tightening torques specified in UL 486A and UL 486B to assure permanent and effective grounding.

3.3 FIELD QUALITY CONTROL

A. Prior to energization of circuitry, check all accessible connections to manufacturer's tightening torque specifications.

B. Prior to energization of panelboards, check with ground resistance tester phase-to-phase and phase-to-ground insulation resistance levels to ensure requirements are fulfilled.

C. Prior to energization, check panelboards for electrical continuity of circuits and for short-circuits.

D. Subsequent to wire and cable hook-ups, energize panelboards and demonstrate functioning in accordance with requirements. Where necessary, correct malfunctioning units, and then retest to demonstrate compliance.

END OF SECTION 262416

THIS PAGE LEFT INTENTIONALLY BLANK

SECTION 262420 - MOTORS AND CONTROLS

PART 1 - GENERAL

1.1 RELATED DOCUMENTS

A. Drawings and general provisions of the Contract, including General and Supplementary Conditions, Division 1 Specification Sections, and Section 260100, "Electrical General Provisions," apply to this Section.

1.2 SCOPE OF WORK

A. Furnish and install motors, controllers, and disconnect switches as indicated on the drawings and specified herein.

B. Provide all wiring, disconnect switches, and electrical connections to all equipment provided and requiring electrical connections. Starters and/or contactors for HVAC equipment that is not integral with the HVAC equipment shall be furnished by the Mechanical Contractor and mounted and provided with power wiring by the Electrical Contractor unless otherwise indicated. Power wiring between starters and/or contactors and the final connection point to the HVAC equipment shall be provided under Division 26. The Mechanical Contractor shall provide the proper number and size of auxiliary contacts required by the HVAC equipment.

C. All control wiring and conduits between control instruments and the motor starter serving a piece of HVAC equipment shall be provided by the Mechanical Contractor under Division 23, unless indicated otherwise on electrical drawings.

D. Review the mechanical drawings and specification sections for exhaust fans requiring wall switch and/or thermostat control and provide same as required whether indicated on the electrical drawings or not.

PART 2 - PRODUCTS

2.1 DISCONNECT SWITCHES

A. Disconnect switches shall be rated 240 Volts with the number of poles and current rating as indicated. Disconnect switches shall be fusible type where indicated, or not indicated but required by the NEC, manufacturer of the equipment served, or the local authority having jurisdiction.

B. Switches shall be NEMA standard HD type.

C. Switches shall be horsepower rated when used for motor disconnect means.

D. Provide fused disconnect switches complete with appropriately sized fuses for the circuits controlled.

PART 3 - EXECUTION

3.1 INSPECTION

A. Inspect area and conditions under which electrical connections for equipment are to be installed, and notify the General Contractor, in writing, of conditions detrimental to proper completion of the work. Do not proceed with the work until unsatisfactory conditions have been corrected.

3.2 INSTALLATION OF DISCONNECT SWITCHES

A. Coordinate locations of disconnect switches (and magnetic starters furnishedunder Division 23) with the locations of mechanical equipment, piping, electrical equipment, and any and all other building elements such that all NEC requirements, including working clearances, are met. Adjust locations from those shown on the drawings as required to comply with NEC working clearance requirements at no additional cost to the project.

B. Secure disconnects switches to building or equipment housings where indicated on the drawings. Where building walls or equipment frames do not provide suitable mounting surfaces, provided a galvanized unistrut frame or rack satisfactory in size to securely support the disconnect switch. Where racks are required to be roof mounted, secure the rack to the roof in a method that does not compromise the roof membrane in any way. Submit the roof attachment method to the Architect/Engineer for approval prior to installation.

3.3 ELECTRICAL CONNECTIONS TO EQUIPMENT

A. Provide electrical connections to equipment indicated in accordance with equipment manufacturer's published instructions and with recognized industry practices and complying with applicable requirements of UL, the NEC, and NECA "Standard of Installation," to ensure that products fulfill requirements.

B. Coordinate with other work, including wires/cables, raceway, and equipment installation, as necessary to properly interface installation of electrical connections for equipment with other work.

C. Connect electrical power supply conductors to equipment in accordance with equipment manufacturer's published instructions and wiring diagrams. Mate and match conductors of electrical connections for proper interface between electrical power supplies and installed equipment.

D. Cover splices with electrical insulating material equivalent to or greater than the electrical insulation rating of the conductors being spliced.

E. Prepare cables and wires by cutting and stripping covering, armor, jacket, and insulation properly to ensure uniform and neat appearance where cables and wires are terminated. Exercise care to avoid cutting through tapes which will remain on conductors. Avoid "ringing" conductors while skinning wire.

F. Trim cables and wires as short as practicable and arrange routing to facilitate inspection, testing, and maintenance.

G. Tighten connectors and terminals, including screws and bolts, in accordance with equipment manufacturer's published torque tightening values for equipment connectors. Accomplish tightening by utilizing proper torquing tools, including torque screwdriver, beam-type torque wrench, and ratchet wrench with adjustable torque settings. Where manufacturer's torquing requirements are not available, tighten connectors and terminals to comply with torquing values contained in UL 486A.

H. Provide flexible metal conduit for motor connections and other electrical equipment connections where subject to movement and vibration.

I. Provide liquid-tight flexible metal conduit for connection of motors and other electrical equipment where subject to movement and vibration and where connections are located where subject to any of the following conditions:

1. Exterior locations

3.4 FIELD QUALITY CONTROL

A. Upon completion of installation of electrical connections and after circuitry has been energized with rated power source, test connections to demonstrate capability and compliance with requirements. Ensure that direction of rotation of each motor fulfills requirement. Correct malfunctioning units at site, then retest to demonstrate compliance.

END OF SECTION 262420

THIS PAGE LEFT INTENTIONALLY BLANK

SECTION 262726 - WIRING DEVICES AND DEVICE PLATES

PART 1 - GENERAL

1.1 RELATED DOCUMENTS

A. Drawings and general provisions of the Contract, including General and Supplementary Conditions, Division 1 Specification Sections, and Section 260100, "Electrical General Provisions," apply to this Section.

1.2 SCOPE OF WORK

A. The extent of wiring device work is indicated by drawings and schedules. Wiring devices are defined as single discrete units of the electrical distribution systems which are intended to carry but not utilize electric energy.

B. Types of electrical wiring devices in this Section include the following:

Receptacles
Ground-fault circuit interrupters
Switches
Coverplates
Wall Plate type Dimmer Switches

C. Comply with the requirements of the NEC, as applicable to installation and wiring of electrical wiring devices.

D. Comply with applicable requirements of UL 20, 486A, 498, and 943 pertaining to installation of wiring devices. Provide wiring devices which are UL-Listed and labeled.

E. Comply with applicable portions of NEMA WD1, "General-purpose Wiring Devices," WD2, "Semi-conductor Dimmers for Incandescent Lamps," and WD5, "Wiring Devices, Specific Purposes."

PART 2 - PRODUCTS

2.1 FABRICATED WIRING DEVICES

A. Provide factory-fabricated wiring devices in types and electrical ratings for applications indicated and which comply with NEMA WD1. Provide ivory colored devices.

2.2 RECEPTACLES

A. Duplex: Provide Industrial/Institutional, Specification-Grade, duplex receptacles, 2-pole, 3-wire, grounding, with green hexagonal equipment ground screw, single-piece brass mounting yoke with integral ground terminals, 20 amperes, 125 Volts, with metal plaster ears; designed for side and back wiring, with NEMA configuration 5-20R, unless otherwise indicated. LEVITON 5362 Series, or approved equal.

B. Ground-fault Circuit Interrupters: Provide Industrial/Institutional, Specification-Grade, "feed-thru"-type ground-fault circuit interrupters, with heavy-duty duplex receptacles, capable of being installed in a 2-3/4" deep outlet box without adapter, grounding type UL-rated Class A, Group 1, rated 20 amperes, 120 Volts, 60 Hz; with solid-state ground-fault sensing and signaling; with 5 mA ground-fault trip level; equipped with NEMA configuration 5-20R. LEVITON model 7899 Series, or approved equal.

2.3 SWITCHES

A. Snap: Provide Specification-Grade, flush, single-pole toggle switches, 20 amperes, 120/277 Volts AC, with mounting yoke insulated from mechanism, equipped with plaster ears, switch handle, equipment grounding screw, and side-wired screw terminals. LEVITON 1221-2 Series, or approved equal. Provide for key operation where indicated on drawings.

2.4 WIRING DEVICE ACCESSORIES

A. Coverplates: Provide ivory colored (unless noted otherwise), nylon coverplates for single and combination wiring devices of types, sizes, and with ganging and cutouts as required. Provide metal screws for securing plates to devices; screw heads colored to match color of plates. Provide stainless-steel coverplates in mechanical and electrical equipment rooms.

B. Provide weatherproof "while-in-use" rated coverplates for receptacles installed outdoors where exposed to weather.

PART 3 - EXECUTION

3.1 INSTALLATION OF WIRING DEVICES

A. Install wiring devices where indicated in Contract Documents in accordance with manufacturer's published instructions, applicable requirements of the NEC and NECA "Standard of Installation," and in accordance with recognized industry practices to fulfill project requirements.

B. Coordinate with other work, including painting, electrical boxes and wiring work, as necessary to interface installation of wiring devices with other work.

C. Install wiring devices only in electrical boxes which are clean, free from building materials, dirt, and debris.

D. Install wiring devices after wiring work is completed.

E. Install coverplates after painting work is completed. Label the inside face of each coverplate with indelible black marker indicating the number of each circuit contained in or running through the outlet box.

F. Tighten connectors and terminals, including screws and bolts, in accordance with equipment manufacturer's published torque tightening values for wiring devices. Where manufacturer's torquing requirements are not indicated, tighten connectors and terminals to comply with tightening torques specified in UL 486A and UL 486B. Use properly scaled torque indicating hand tool.

G. Terminate all switch and receptacle wiring on side screw terminals. Back terminations are not permitted.

H. Install all switches and receptacles with sufficient wiring length such that the device may be extracted from the outlet box a minimum of 6" while still connected.

3.2 PROTECTION OF COVERPLATES AND RECEPTACLES

A. Upon installation of coverplates and receptacles, take caution regarding use of convenience outlets. At time of Substantial Completion, replace all coverplates and receptacles which have been damaged; during the execution of this project; including those painted over, burned, or scored by faulty plugs.

3.3 GROUNDING

A. Provide equipment grounding connections for wiring devices, unless otherwise indicated. Tighten connections to comply with tightening torques specified in UL 486A to assure permanent and effective grounding.

3.4 TESTING

A. Prior to energizing circuitry, test wiring for electrical continuity and for short-circuits. Ensure proper polarity of connections is maintained. Subsequent to energization, test wiring devices to demonstrate compliance with requirements.

END OF SECTION 262726

SECTION 264313 – PANELBOARD SURGE PROTECTION DEVICES

PART 1 - GENERAL

1.1 RELATED DOCUMENTS

A. Drawings and general provisions of the Contract, including General and Supplementary Conditions, Division 1 Specification Sections, Section 260100, "Electrical General Provisions," and Section 260526, "Grounding," apply to this Section.

1.2 SCOPE OF WORK

A. Provide panelboard surge protection devices with electrical and mechanical requirements for an 80,000-Amp per mode, Surge Protection Device (SPD) with L-N, L-G, L-L, and N-G Mode Protection and parallel design using fast-acting transient energy protection that will divert and dissipate the surge energy.

1.3 QUALITY ASSURANCE

A. Requirements of Regulatory Agencies:

Underwriter's Laboratories, Inc. (UL)
UL Standards 1449 3rd edition 1283 (complementary listing for Type Locations)

B. IEEE Compliance:

IEEE Standards C62.11 (2005), C62.33 (1982), C62.41 (1991), C62.45 (2002)

1.4 CODES AND STANDARDS

A. Transient voltage surge suppressors shall be listed and labeled per UL 1449 latest edition, and UL 1283, and comply with ANSI-IEEE C62.45 test procedures for all categories established in C62.41 (1991).

B. ANSI/IEEE Std. 1100-2005 Section 8.6.1 (Emerald Book).

C. ANSI C84.1, American National Standard for Electric Power Systems and Equipment – Voltage Ratings (60 Hertz).

Electrical Designers/Engineers:
Advise mechanical designer by email to require these to be monitored by DDC system. Give the mechanical designer the drawing number of the power riser diagram to reference and ensure that each panel receiving a SPD device is so noted on the riser diagram.

1.5 MANUFACTURER QUALIFICATIONS

A. The surge protection device shall be manufactured by an ISO 9001-2001 certified company normally engaged in the design, development, and manufacture of such equipment.

1.6 WARRANTY

A. The SPD unit shall be guaranteed by the Installing Contractor and surge protection manufacturer to be free of defects in materials and workmanship for a period of not less than 5 years from the date of Substantial Completion of the system to which the SPD is installed.

B. The SPD unit, which depicts evidence of failure, malfunction, or incorrect operation during the 5-year warranty period, shall be replaced as a complete unit, if necessary, not just modules, subassemblies, or components by the manufacturer at no charge to the Owner.

1.7 SUBMITTALS

A. SPD submittals shall include, but shall not be limited to the following items:

1. Complete schematic data for ALL SPDs indicating part numbers, conductor sizes, etc.
2. Dimensioned drawing of each SPD type indicating mounting arrangement.
3. Manufacturer shall include their UL 1449 3rd edition, listing classification page and listing number(s) showing the Suppressed Voltage Ratings (SVR) as well as all "Engineering Considerations."
4. Provide third party test documentation demonstrating that the SPD is capable of surviving the specified Maximum Surge Current Rating. The documentation will clearly demonstrate that tests have been performed on a COMPLETE device, including all necessary fusing, disconnects, and monitoring systems.
5. Provide data demonstrating that the device is capable of surviving the specified number of repetitive ANSI/IEEEC62.41 Category C3 (10kA) impulses without failure or performance degradation of more than 10%.
6. Provide test data demonstrating that the device is capable of surviving the specified short circuit current rating (AIC) per the requirements of NEC Article 285.6.
7. Provide COMPLETE data package per the recommendations of NEMA LS-1 (1992).

PART 2 - PRODUCTS

2.1 SURGE PROTECTION DEVICE (SPD)

A. The Surge Protection Device (SPD) shall be of a parallel design using fast-acting transient energy protection that will divert and dissipate the surge energy. The SPD shall be UL-Listed at or above the available fault current level at the point of SPD application by UL, per UL 1449 3rd edition. The SPD shall be marked with the short circuit current rating. The SPD's short circuit rating shall be 80kAIC. SPD device can not utilize current limiting fuses. The SPD shall be self-restoring and fully automatic. The maximum continuous operating voltage shall be capable of sustaining 115% of nominal RMS voltage continuously without degrading in accordance with NEMA LS-1 (1992). The SPD shall only use solid-state clamping components to limit the surge voltage. SPD components that "crowbar" or short-circuit the AC power system (e.g., spark gaps, gas tubes, selenium cells, or SCRs) are not acceptable. (service entrance, distribution panels and branch panelboards) shall be supplied by the same manufacturer.

B. Mode Protection: The SPD system shall provide MOVs configured to provide protection in all possible modes (L-L, L-N, L-G & N-G). Unless otherwise noted, provide NEMA 1 enclosure for indoor mounting and NEMA 3R enclosure for all outdoor locations. The SPD device shall provide a minimum protection of 80kA per mode (L-L, L-N, L-G & N-G) capable of surviving at least 5,000 sequential Category C3 impulses. The unit shall have panel front status monitors to indicate a continuous positive status of each protected phase, form "C" contacts, and internal surge tested fuses. Fuse shall not open under surge conditions and shall protect the device against thermal runaway.

C. The SPD shall have a UL-1449, 3rd edition Voltage Protection Rating (VPR) as follows:

Mode	208Y/120
L-L	1200v
L-N	700v
L-G	700v
N-G	700v

PART 3 - EXECUTION

3.1 INSTALLATION

A. Install the SPD with #10 AWG minimum conductors to 30-amp breaker(s) in panel per manufacturer's installation instructions. The 3-pole breaker will be provided by the panel manufacturer. Locate the SPD as physically close as possible to the panelboard neutral and locate the SPD breaker as close as possible to the SPD location. The conductors serving the SPD shall be twisted together to reduce the SPD system input impedance and kept at the minimum length. The SPD shall be installed in strict accordance with the manufacturer's recommended practices and in compliance with NEC requirements. Measured impedance may not be higher than 5 ohms on the ground for the service entrance SPD device.

B. If lead lengths exceed 18", the Contractor responsible for installation ***must*** contact the surge suppression manufacturer for installation assistance.

3.2 GROUNDING CONNECTORS

A. Connectors, splicers, and other fittings used to interconnect ground conductors, bond to equipment or grounding bars, shall be approved by NEC or UL for their purpose.

B. All connectors and fittings shall be of the Nicopress crimp or compression setscrew type.

C. Special treatment to fittings, lugs, or other connectors of dissimilar material shall be applied to prevent electro-galvanic action.

3.3 FINAL INSPECTION

A. The surge protection installation shall be inspected by a licensed electrician to verify proper system voltage, SPD voltage, configuration, and installation in accordance with the NEC. Any deficiencies noted shall be corrected by the Contractor. Provide written documentation of this inspection as part of the closeout documents/manual.

END OF SECTION 264313

SECTION 265100 - INTERIOR BUILDING LIGHTING

PART 1 - GENERAL

1.1 RELATED DOCUMENTS

A. Drawings and general provisions of the Contract, including General and Supplementary Conditions, Division 1 Specification Sections, and Section 260100, "Electrical General Provisions," apply to this Section.

1.2 DEFINITIONS

A. Total Harmonic Distortion (THD): The sum of the root mean square (RMS) current (or voltage) of each of the individual harmonic frequencies divided by the root mean square (RMS) of the fundamental current (or voltage).

1.3 SCOPE OF WORK

A. Extent of interior light fixture work is indicated by drawings and schedules.

B. Light fixtures shown installed on exterior walls or under canopies attached to the building are considered interior building lighting.

C. Types of interior light fixtures in this Section include the following:

Light Emitting Diode (LED)

1.4 QUALITY ASSURANCE

A. Comply with the requirements of the NEC, as applicable to installation and construction of interior building light fixtures.

B. Provide interior light fixtures which are UL-Listed and labeled.

PART 2 - PRODUCTS

2.1 INTERIOR LIGHT FIXTURES

A. Provide light fixtures of sizes, types, and ratings indicated; complete with, but not limited to, housings, lamps, lamp holders, reflectors, ballasts, starters, and wiring. Provide fixture trims as required for proper installation into the type ceiling in which installed. Review Architectural reflected ceiling plans for ceiling types and construction and provide all mounting hardware required for proper installation of the fixtures specified for the location.

2.2 LED LIGHT FIXTURES

A. LED fixtures shall be in compliance with UL.

B. Interior Area LED Fixtures/Lamps:

1. Kelvin temperature of 3500 k.
2. 75 plus lumens per watt.
3. CRI 80 or greater.
4. 5-year warranty minimum with L70 of 50,000 hours or greater.
5. Modular design for field replacement of parts.
6. Tool less access to driver and LED modules.
7. Cannot have LED pixilation (or commonly called bug eye effect).
8. UL certified up to 90F degrees operating temperature.

C. Manufactured by one of the following:

1. Nichia Corporation.
2. Cree, Inc.
3. Philips LumiLED.
4. Osram Opto Semiconductors.
5. Cooper Industries.
6. Lusio Lighting.
7. Sony.
8. Citizens Electronics

2.3 RECESS- AND FLUSH-MOUNTED FIXTURES

A. Provide light fixture types which can be accessed from the bottom. Access to LED driver shall be from the bottom. Trim for the exposed surface of flush-mounted fixtures shall be as required for the ceiling construction in which it is installed.

2.4 SUSPENDED FIXTURES

A. Provide hangers capable of supporting twice the weight of the fixture supported by the hanger. Hangers shall allow fixtures to swing within an angle of 20 degrees. Multiple-unit or continuous row fluorescent fixtures shall have a tubing or stem for wiring at one point and a tubing or rod suspension provided for each unit length of chassis, including one at each end, unless indicated otherwise. Rods shall be a minimum .18" diameter.

2.5 EXIT SIGNS

A. Signs shall be in conformance with UL and NFPA. Exit signs shall be self-powered type where indicated.

B. Self-Powered LED-Type Exit Signs (Battery Backup): Provide with automatic power failure device, test switch, pilot light and fully automatic high/low trickle charger in a self-contained power pack. Battery shall be sealed electrolyte type, shall operate unattended, and require no maintenance, including no additional water, for a period of not less than 5 years. LED exit sign shall have emergency run time of 1.5 hours (90 minutes) minimum.

2.6 EMERGENCY LIGHTING EQUIPMENT

A. Equipment shall be in conformance with UL and NFPA. Provide lamps in wattage indicated.

B. LED Emergency Battery-Ballast: Each unit shall consist of an automatic power failure device, test switch operable from outside of the fixture, pilot light visible from outside the fixture, and fully automatic solid-state charger in a self-contained power pack. Charger shall be either trickle, float, constant-current or constant-potential type, or a combination of these. Battery shall be sealed electrolyte type with capacity as required to supply power to one lamp for 90 minutes at a minimum of 1,100 lumens per lamp output. Battery shall operate unattended and require no maintenance for a period of not less than 5 years.

PART 3 - EXECUTION

3.1 INSTALLATION

A. Install interior light fixtures at locations and heights as indicated in accordance with fixture manufacturer's published instructions, applicable requirements of the NEC, NECA "Standard of Installation," NEMA standards, and with recognized industry practices to ensure that light fixtures fulfill requirements.

B. Coordinate with all other work on this Contract as appropriate to properly interface installation of interior light fixtures.

C. Fasten fixtures securely to building structural members, and check to ensure that solid pendant fixtures are plumb. Recessed fluorescent fixtures shall be supported with individual annealed, light zinc-coated finish, 12-gauge wire from all four corners tied to building structural members. Securing safety wires to bridging is not acceptable.

D. Clean interior light fixtures of dirt and debris (including lenses) upon completion of installation.

E. Protect installed fixtures from damage during entire construction period.

3.2 FIELD QUALITY CONTROL

A. Upon completion of installation of interior light fixtures and after building circuitry has been energized, apply electrical energy to demonstrate capability and compliance with requirements. Where possible, correct malfunctioning units at site, then retest to demonstrate compliance; otherwise, remove and replace with new units, and proceed with retesting.

3.3 GROUNDING

A. Provide tight equipment grounding connections for each interior light fixture installation.

END OF SECTION 265100