Weinstein Residence
221 Nelson Street
NELSON STREET
NELSON STREET
(CLOSED)

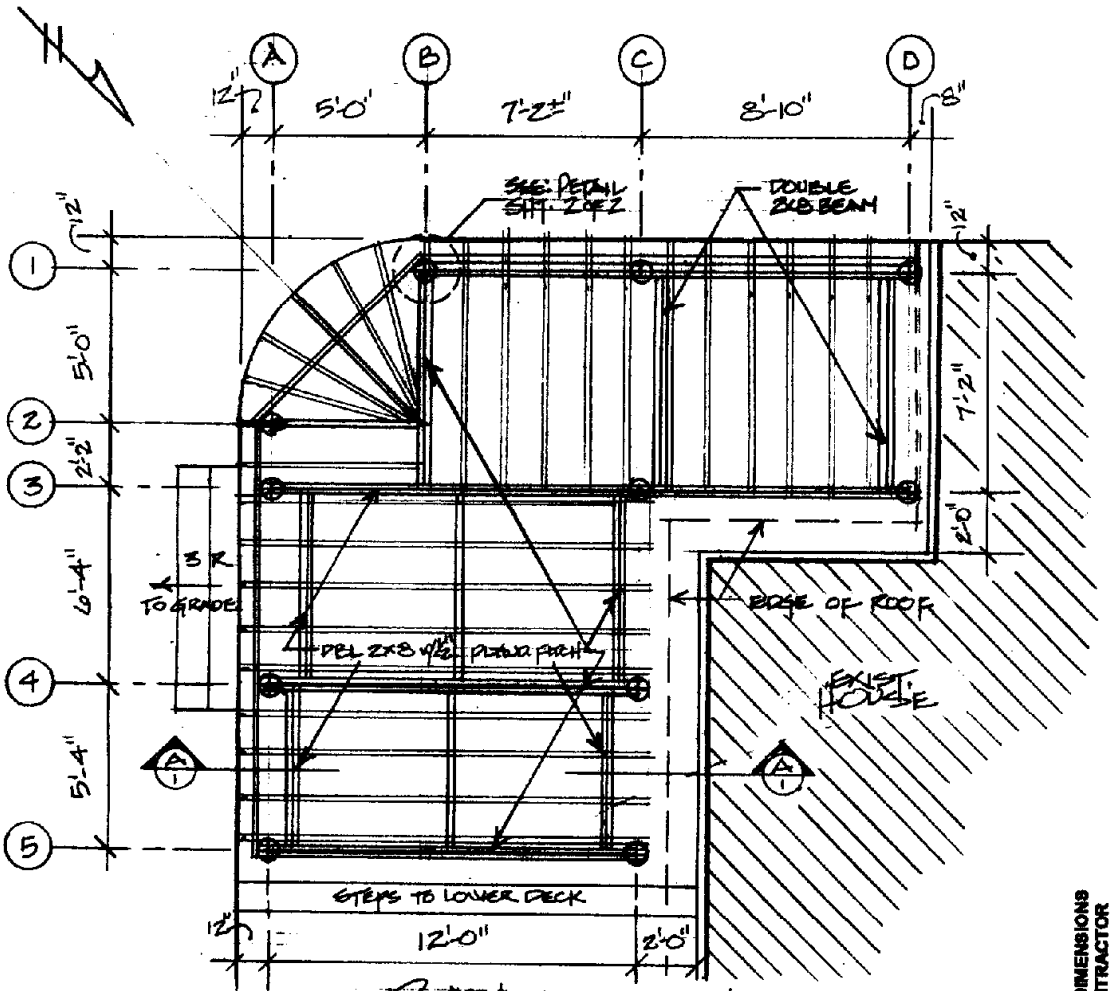

PLAN SCALE: 1/4"=1'-0"

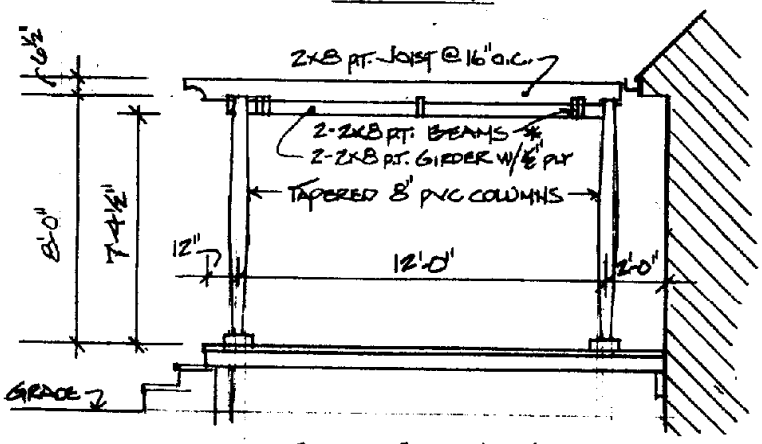

SECTION A-A SCALE: 1/4"=1'-0"

* w/½" PLYWD. PATCH, 4 REQ'D.

NOTE:

THE CONTRACTOR SHALL NOT SCALE THESE DRAWINGS. DIMENSIONS INDICATED ON THESE DRAWINGS SHALL BE USED. THE CONTRACTOR SHALL READ AND FIELD VERIFY ALL DIMENSIONS AND SHALL NOTIFY THE DESIGN CONSULTANT OF ANY DISCREPANCIES PRIOR TO CONSTRUCTION.

DWG. BY: O.L.W.	"DECK TRELLIS"
CKD. BY:	
DATE: 3-11-04	MR HARVEY WEINSTEIN
PROJ. # 040302	221 NELSON ST.
SCALE: 1/4"=1'-0"	YORKTOWN, VA 23690
SHEET 1 OF 2	

Olin L. Walden, B. Arch.
President/CEO
OLIN ARCTRONICS
Building Design, Real Estate and Construction Consultants
Project Planning
Construction Management
Commission & Council Hearings
Building Design
Building Inspection
Approvals
Permit Expediting
HUD 203(k) Consulting
Building & Zoning Appeals
P.O. Box 523
Hampton, VA 23669
[redacted]
Office: (757) [redacted]
[redacted]
FAX: (757) [redacted]

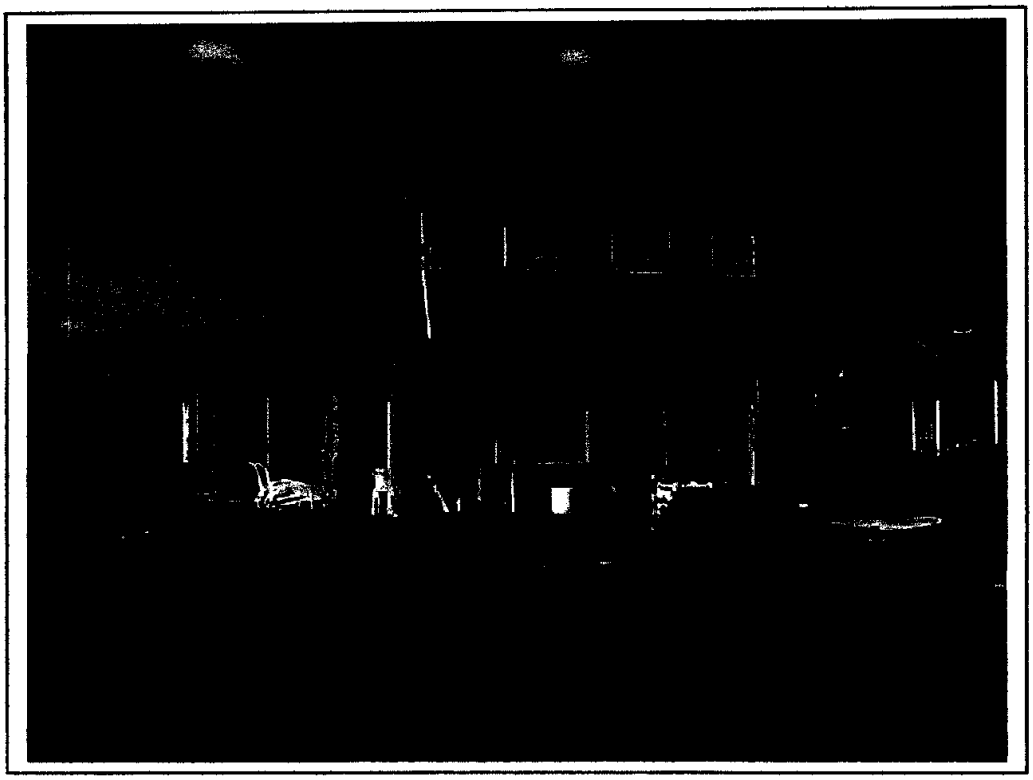

Weinstein Residence – 221 Nelson Street – Back of House

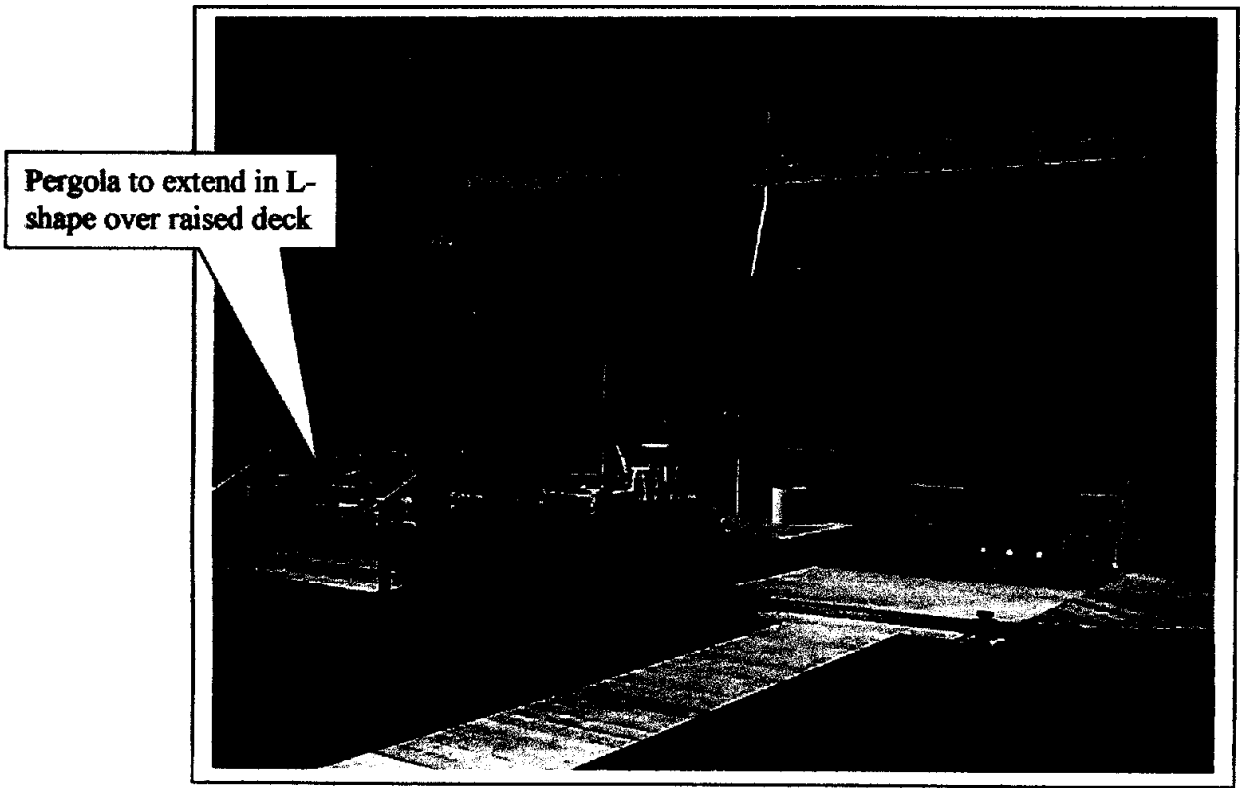

Back of house; Pergola to cover elevated portion of deck