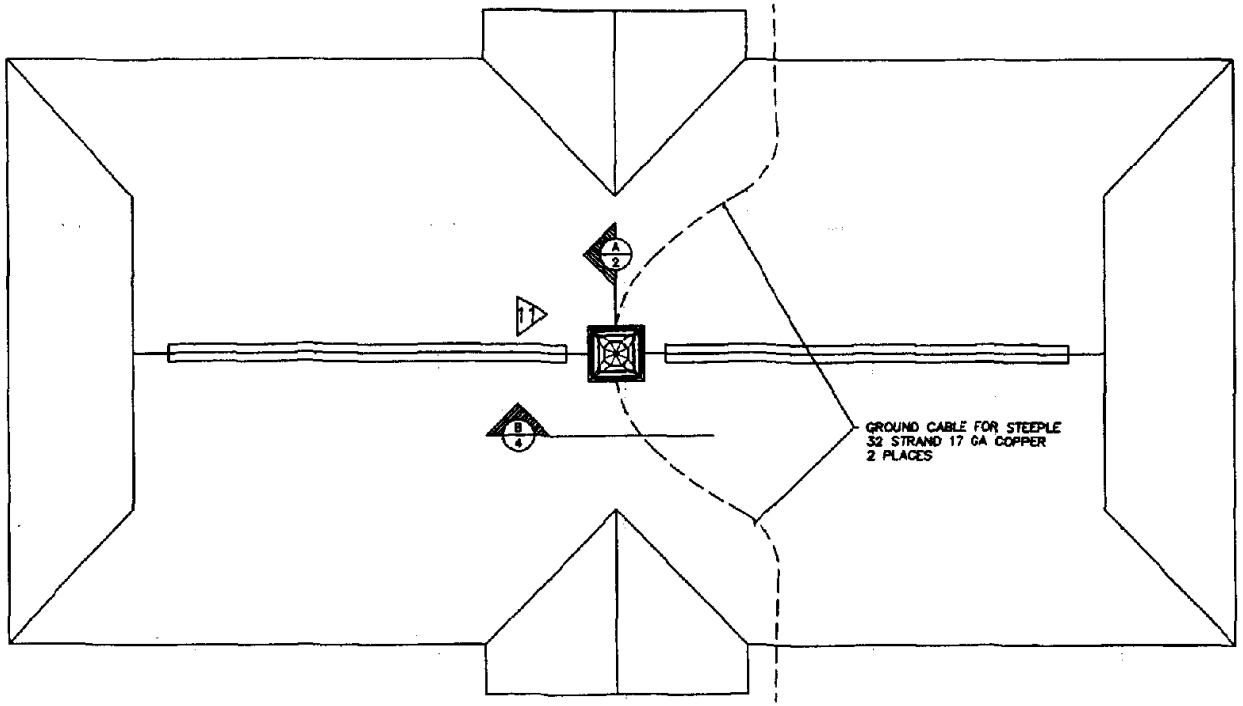

B/1 TOP VIEW

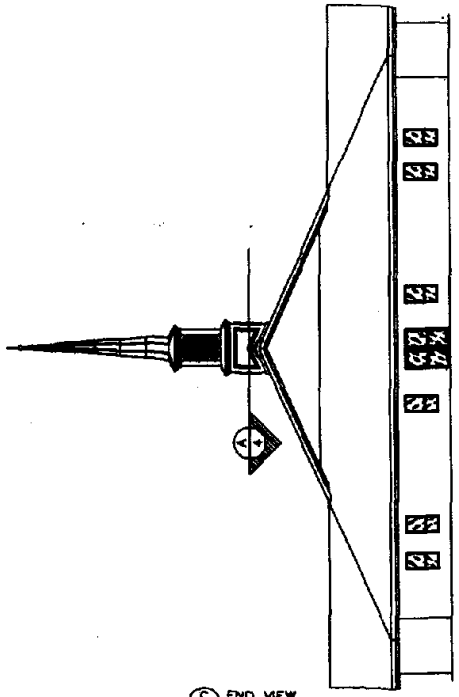

C/1 END VIEW

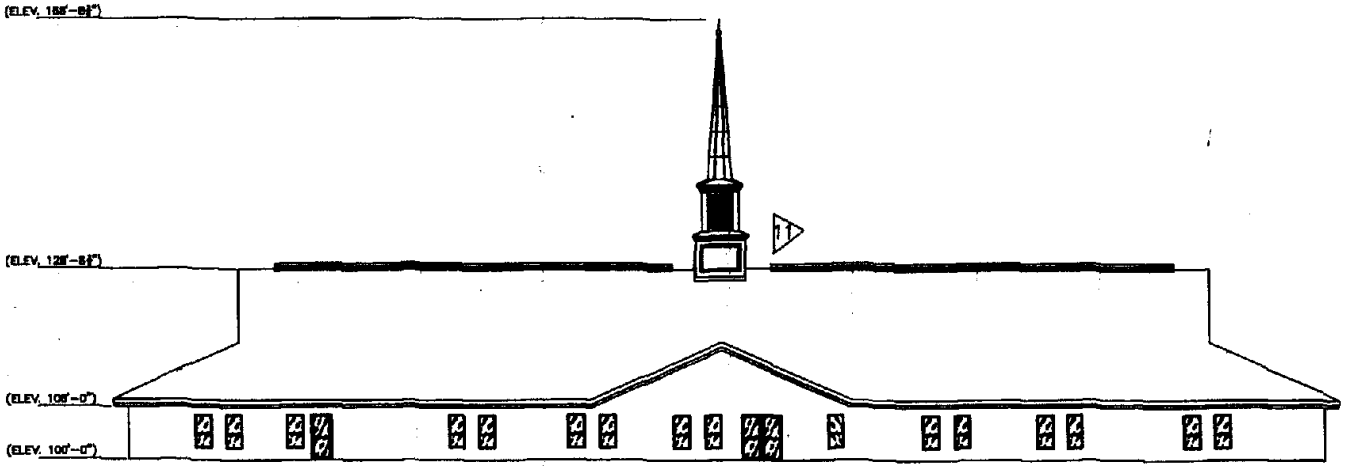

A/1 SIDE VIEW

COMMONWEALTH OF VIRGINIA
JAMES PATTERSON
0402 036481
26 NOV 03
PROFESSIONAL ENGINEER

REVISION	DATE	ENGINEER
NC	3 NOV 00	J. PATTERSON
A	10 MAR 01	J. PATTERSON

PROPERTY # 535-5680	JOB NAME POQUOSON 113 SINCLAIR LANE YORKTOWN, VA
REVISION B / DATE 15 OCT 01	DWG: SAGE 2000-02
UNLESS OTHERWISE SPECIFIED DIMENSIONS ARE IN FEET & INCHES	LDS GMSR PROJECT
SCALE NONE	FOR MUNNS MFG.
DRAWN BY R. NOORDA	
CHECKED BY J. PATTERSON	SAGE 'Center' Mount / SHEET 1 OF 6 / REV B

NOTE:
USE THIS PAGE FOR DRAWING STAMP

SEE PAGE 2 FOR DIMENSIONS

Contents:

Page 1 - This page
Page 2 - Dimensions & Details
Page 3 - Louver Section and General Notes
Page 4 - Frame Work & Cut Chart
Page 5 - Structure & Steel Base
Page 6 - Roof Access Opening

DESIGN CRITERIA

1997 UBC
1999 BOCA
110 MPH, EXP C
SEISMIC ZONE 4

Property # 535-5080

UNLESS OTHER WISE SPECIFIED DIMENSIONS ARE IN FEET & INCHES	JDS GMSR PROJECT
SCALE 3/8" = 1'	MUNNS MFG.
DRAWN BY R. KELLER	DATE 9 JAN 03 SHEET SAGE - B SHEET 1 OF 6
CHECKED BY R. NOORDA	

Roanoke-VA

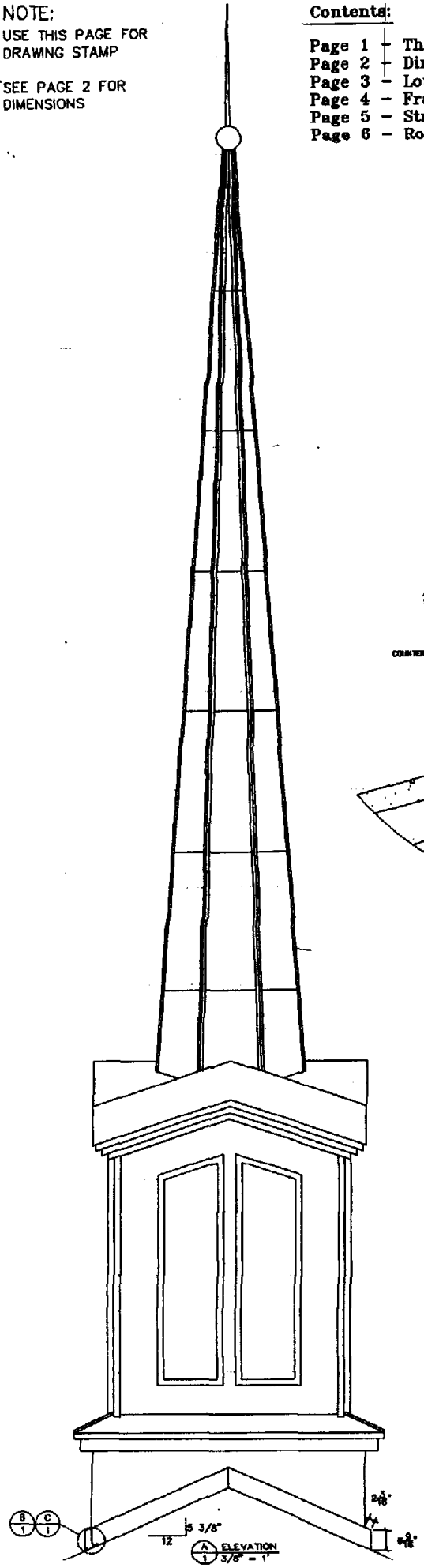

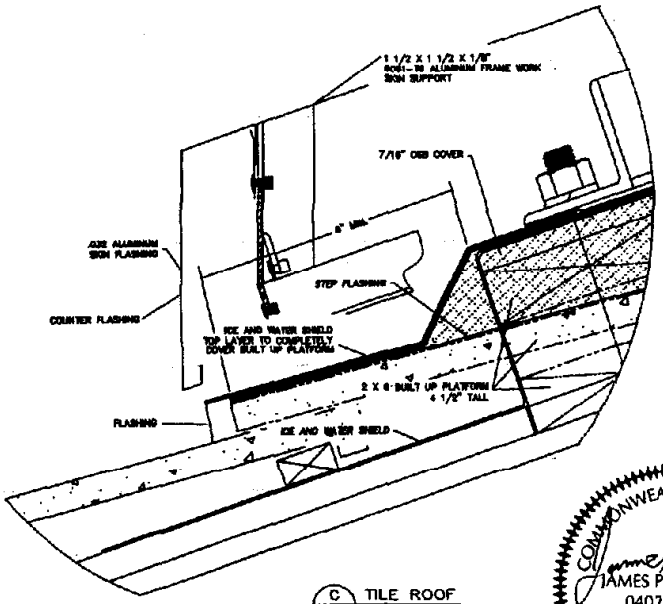

C 1 TILE ROOF FLASHING

COMMONWEALTH OF VIRGINIA
JAMES PATTERSON
0402 036481
26 NOV 03
PROFESSIONAL ENGINEER

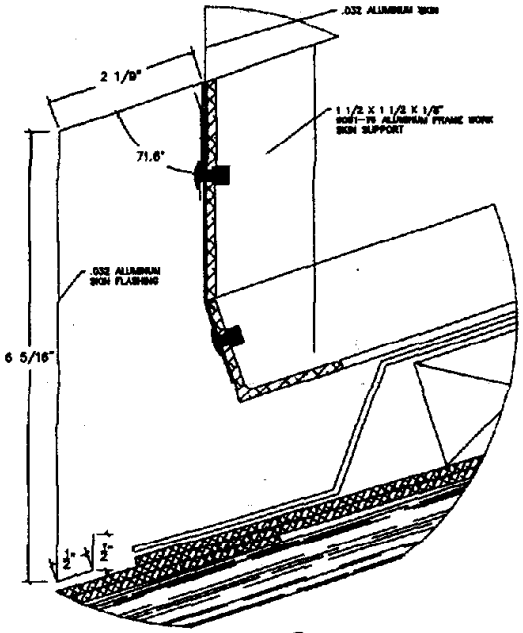

B 1 SHINGLE ROOF FLASHING

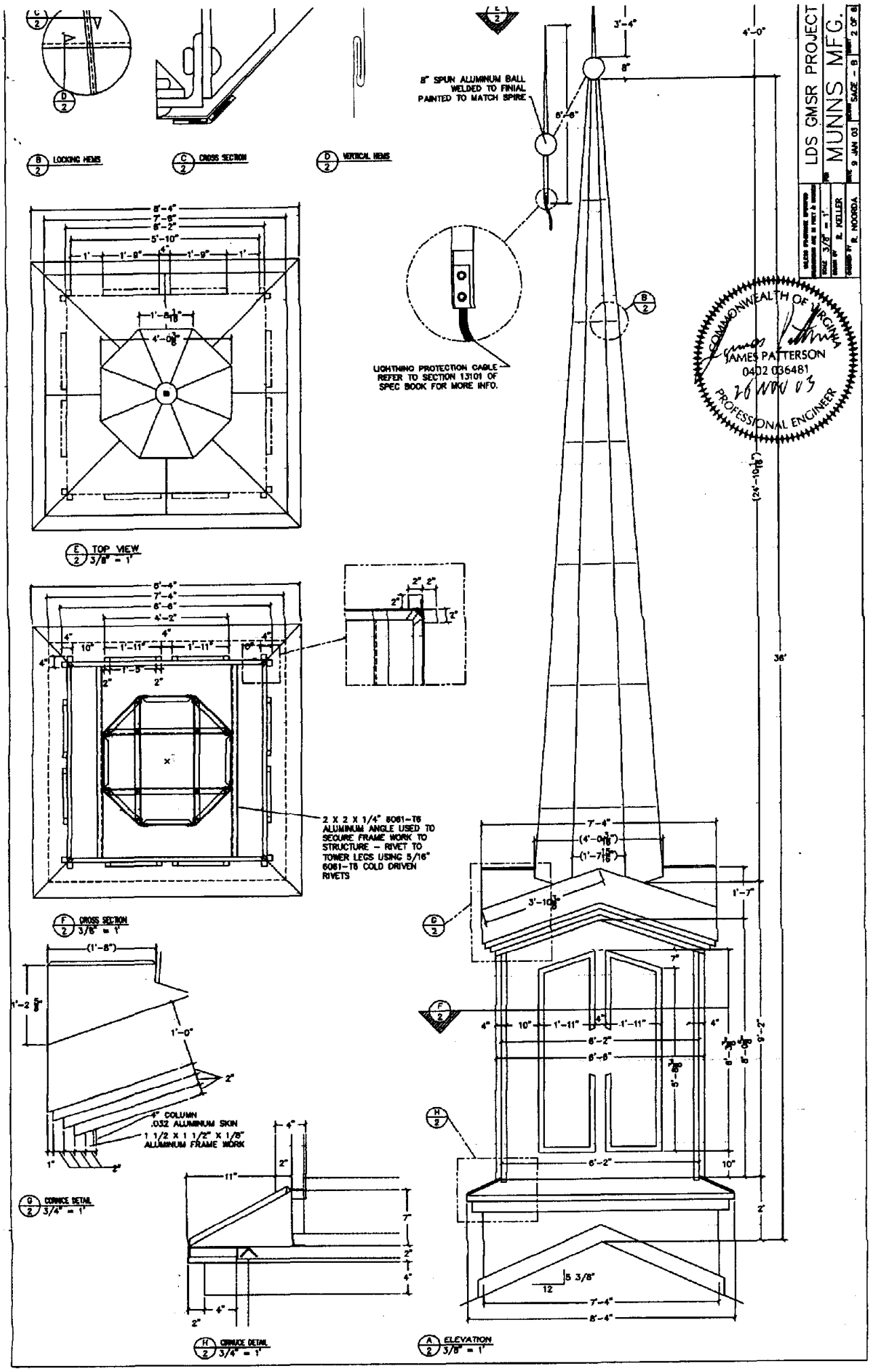
LDS GMSR PROJECT
MUNNS MFG.
SCALE 3/8" = 1'
DRAWN BY R. KELLER
CHECKED BY R. NOORDA
DATE 9 JAN 03
SHEET SAGE - B
SHEET 2 OF 8
B/2 LOCKING HEMS
C/2 CROSS SECTION
D/2 VERTICAL HEMS
8" SPUN ALUMINUM BALL WELDED TO FINIAL PAINTED TO MATCH SPIRE
LIGHTNING PROTECTION CABLE REFER TO SECTION 13101 OF SPEC BOOK FOR MORE INFO.
E/2 TOP VIEW 3/8" = 1'
F/2 CROSS SECTION 3/8" = 1'
2 X 2 X 1/4" 6061-T6 ALUMINUM ANGLE USED TO SECURE FRAME WORK TO STRUCTURE - RIVET TO TOWER LEGS USING 5/16" 6061-T6 COLD DRIVEN RIVETS
4" COLUMN .032 ALUMINUM SKIN
1 1/2 X 1 1/2" X 1/8" ALUMINUM FRAME WORK
G/2 CORNICE DETAIL 3/4" = 1'
H/2 CORNICE DETAIL 3/4" = 1'
A/2 ELEVATION 3/8" = 1'
COMMONWEALTH OF VIRGINIA
JAMES PATTERSON
0402 036481
26 NOV 03
PROFESSIONAL ENGINEER

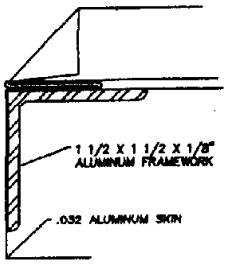

C/3 CORNER DETAIL

1. TOWER LEGS TO BE 2 1/2 X 2 1/2 X 1/4" 6061-T6 ALLOY ALUMINUM ANGLE UP TO 23' 6". ABOVE 23' 6", 2 X 2 X 1/4" 6061-T6 ALLOY ALUMINUM ANGLE.
PERIMETER BRACING HORIZONTAL, DIAGONAL AND TIC-TAC-TOE BRACING TO BE 2 1/2 X 2 1/2 X 1/4" 6061-T6 ALUMINUM ALLOY UP TO 8'. 2 X 2 X 1/4" 6061-T6 ALLOY ALUMINUM ANGLE ABOVE 8'

2. STRUCTURAL ALUMINUM ANGLE TO BE RIVETED USING 5/16 X 1" 6061-T6 SOLID ALUMINUM RIVETS, COLD DRIVEN, NOT LOADED UNDER TENSION, ROUND HEAD STYLE AN-430 DISTANCE BETWEEN RIVETS TO BE 1" ON CENTER

3. ALL FRAMEWORK ALUMINUM 1 1/2 X 1 1/2 X 1/8" WILL BE 6061-T6 ALUMINUM ALLOY WELDED USING GMAW WITH 5356 ALUMINUM ALLOY FILLER WIRE

4. STRUCTURAL STEEL BASE TO BE 3 X 3 X 1/4" STEEL ANGLE WELDED USING E7018 GRADE WIRE UTILIZING FULL PEN FILLET WELDS IN ALL ANGLE JOINTS. STEEL BASE TO BE PAINTED USING ACRYLIC METAL PRIMER OR EQUIVALENT. STEEL GUSSETS TO BE BOLTED USING 2 A325 7/8-IN BOLTS WITH A MINIMUM TIGHTENING TORQUE OF 515 FT-LBS.

5. ALL DISSIMILAR METALS TO BE ISOLATED WITH FIBROUS ASPHALTUM PRODUCTS.

6. ALUMINUM CLADDING TO BE .032 ALUMINUM WITH KYNAR 500 PAINT FINISH.

7. 316 OR 304 STAINLESS STEEL BOLTS WILL BE USED BETWEEN STEEL AND ALUMINUM PARTS. BOLT SIZE SHOWN ON SHOP DRAWINGS MEETING MINIMUM ASTM F593 WITH NUMBER TO BE USED STATED ON THE SHOP DRAWINGS

8. ALL FASTENERS TO BE CONCEALED WHERE POSSIBLE.

9. AREA UNDER STEEPLE TO BE COMPLETELY WATERPROOF PRIOR TO INSTALLATION.

10. ALL TOWER LEG SPLICE JOINTS WILL BE SUPPORTED WITH 6061-T6 ALUMINUM ANGLE OF THE SMALLER SIZE AT THE SPLICE JOINT RIVETED ON BOTH SIDES OF THE ANGLE AND BOTH SIDES OF THE JOINT.

11. EXPOSED FASTENERS TO BE PAINTED TO MATCH STEEPLE.

12. REFER TO SECTION 13101 OF GENERAL SPECIFICATIONS FOR INFORMATION REGARDING LIGHTNING PROTECTION AND GROUNDING.

LDS GMSR PROJECT
FOR MUNNS MFG.
DATE 8 JAN 03 SAGE - B SHEET 3 OF 6
UNLESS OTHERWISE SPECIFIED DIMENSIONS ARE IN FEET & INCHES
SCALE 1" = 1'
DRAWN BY R. KELLER
DESIGNED BY R. HOORDA

COMMONWEALTH OF VIRGINIA
JAMES PATTERSON
0402 036481
26 NOV 03
PROFESSIONAL ENGINEER

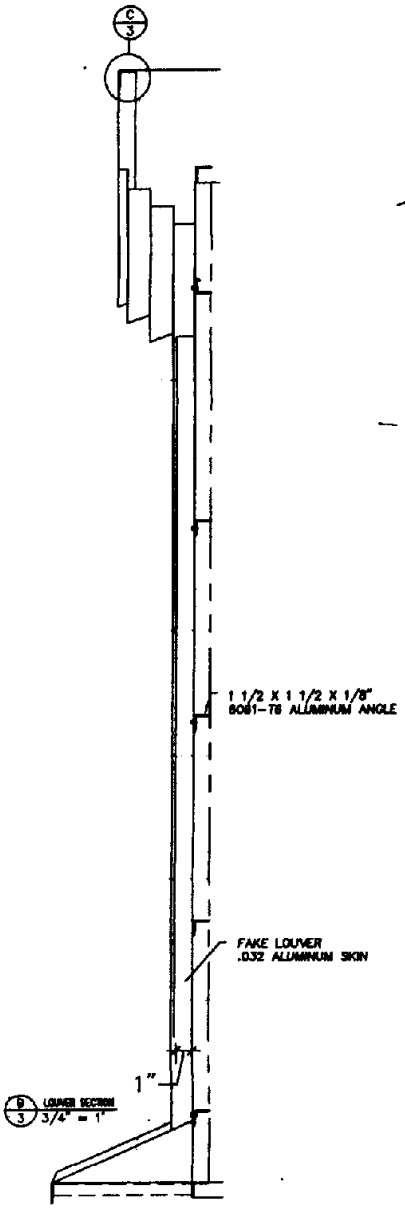

B/3 LOUVER SECTION 3/4" = 1"

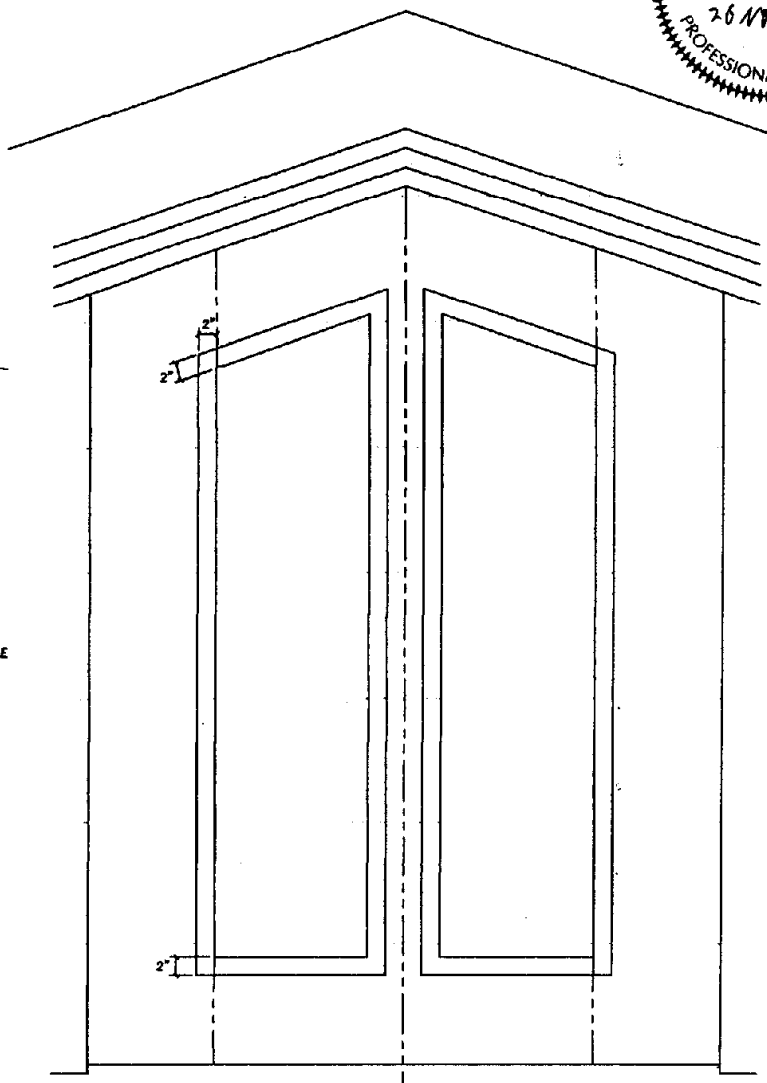

A/3 LOUVER SECTION 1" = 1'

B/3

CUT CHART

PART #	AMT	LENGTH	CUT ANGLES
A	6	7'-4"	2 @ 45°
A1	2	4'-0 3/16"	1@45° & 1@-24.1°
B	4	8'-4"	2 @ 45°
C	8	6'-2"	2 @ 45°
C1	16	5'-11"	2 @ 90°
D	4	8'-10 1/4"	2 @ 90°
E	6	2'-10"	2 @ 90°

CUT CHART

PART #	AMT	LENGTH	CUT ANGLES
E1	4	2'-10"	1@90° & 1@24.1°
E2	4	2'-0 13/16"	1@90° & 1@24.1°
E3	2	1'-3"	1@90° & 1@-24.1°
F	20	0'-5 7/8"	2 @ 90°
G	8	3'-10 3/8"	1@54.2°&1@-18.4°
G1	8	3'-3"	1@54.2°&1@-18.4°

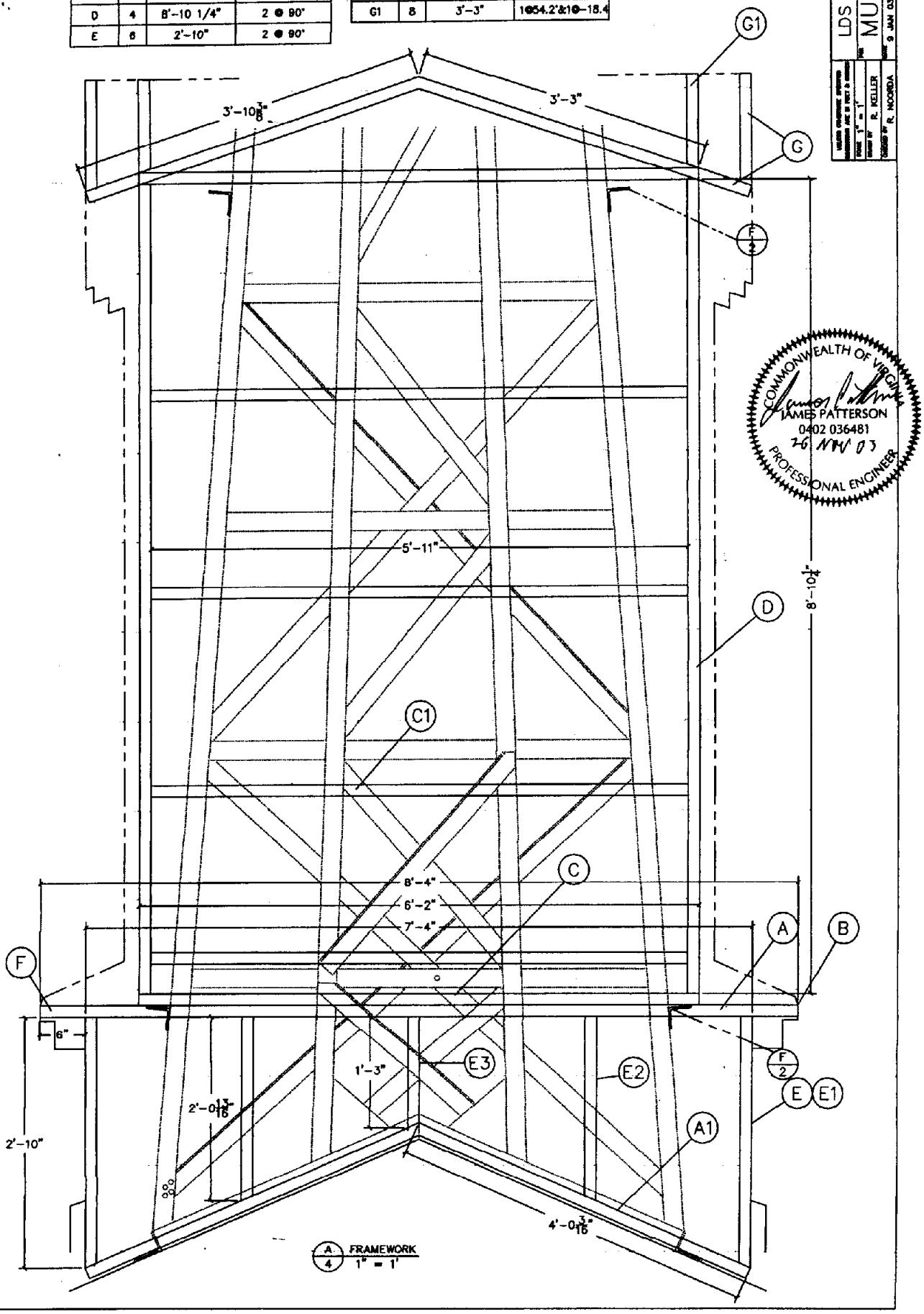

A/4 FRAMEWORK
1" = 1'

COMMONWEALTH OF VIRGINIA
JAMES PATTERSON
0402 036481
26 NOV 03
PROFESSIONAL ENGINEER

LDS GMSR PROJECT
MUNNS MFG.
9 JAN 03
SAGE - B
4 OF 8
1" = 1'
R. KELLER
R. NOORDA

ELEVATION	A	B	C	D
UP TO 10'	3	4	3	1
11 TO 22'	2	3	2	1
ABOVE 22'	1	2	1	1

NUMBER OF RIVETS

LDS GMSR PROJECT

MUNNS MFG.

DATE 9 JAN 03 | PROJECT SAGE - 8 | SHEET 5 OF 6

DRAWN BY R. KELLER | SCALE 3/8" = 1'

CHECKED BY R. NOORDA

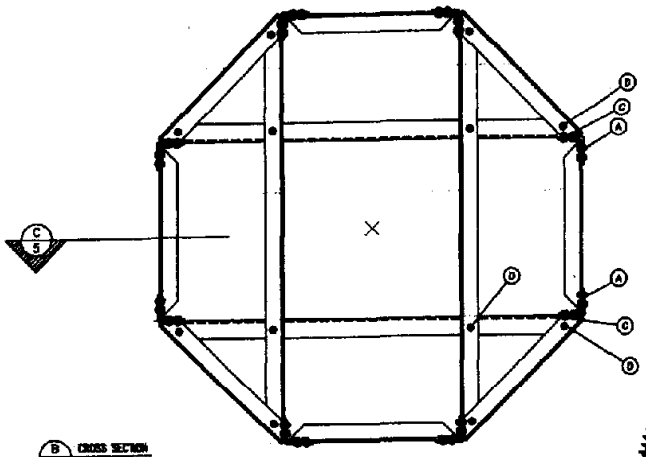

B 5 CROSS SECTION

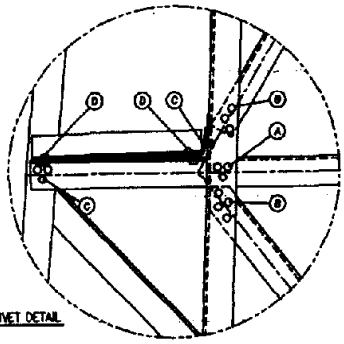

C 5 RIVET DETAIL

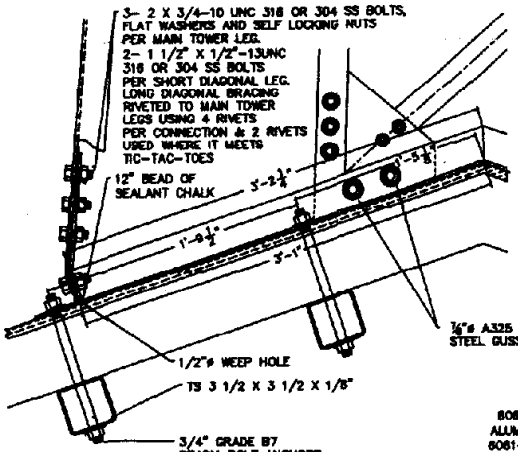

D 5 BASE DETAIL

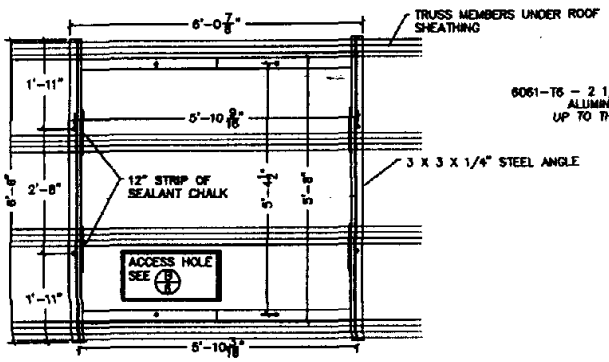

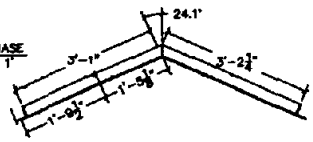

E 5 STEEL BASE 3/8" = 1'

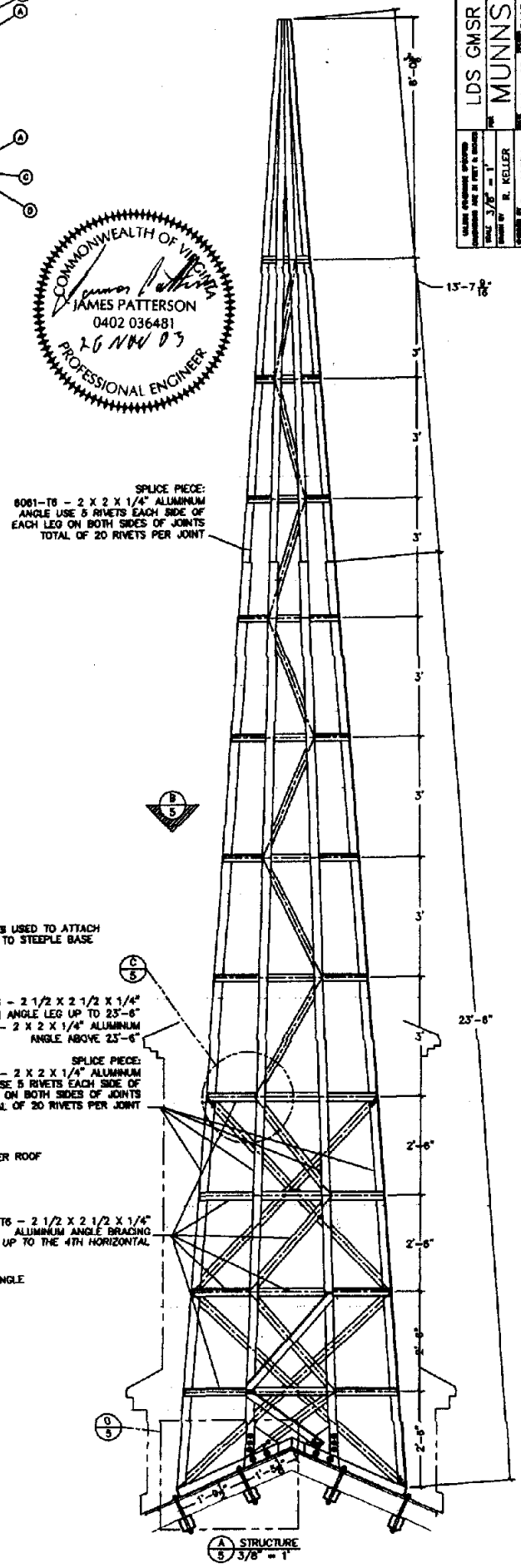

A 5 STRUCTURE 3/8" = 1'

COMMONWEALTH OF VIRGINIA
JAMES PATTERSON
0402 036481
26 NOV 03
PROFESSIONAL ENGINEER

NOTE:

TILE ROOFS REQUIRE A BUILT UP PLATFORM OF 3-2X6 MEMBERS WITH A SHEATHING PIECE OF 7/16" OSB THE ENTIRE PLATFORM WILL BE WEATHERPROOFED WITH 2 LAYERS OF ICE & WATER SHIELD

ASPHALT SHINGLE ROOFS REQUIRE A BUILT UP PLATFORM OF 1-2X6 MEMBER AND WATERPROOFED WITH 2 LAYERS OF ICE AND WATER SHIELD

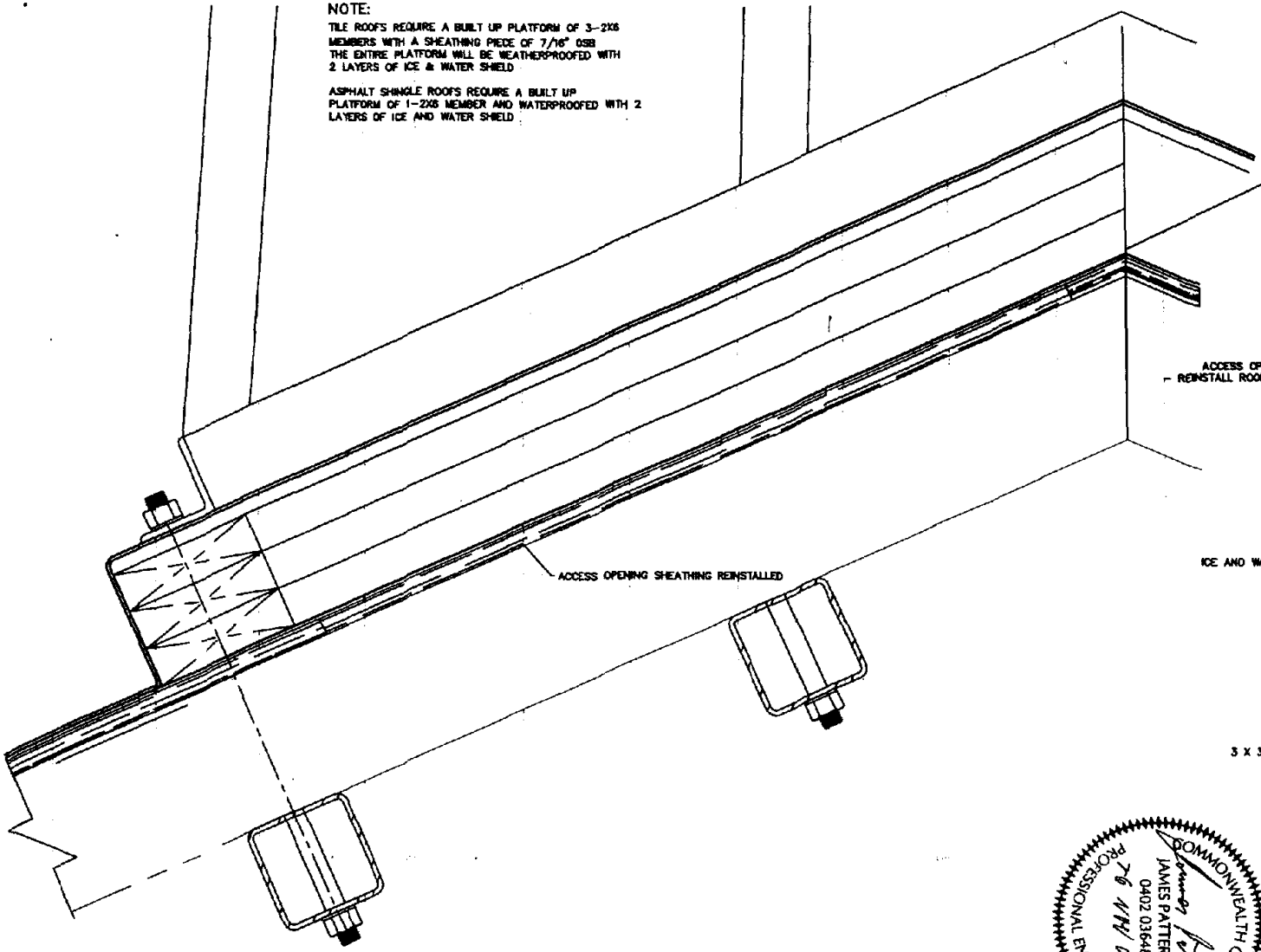

A STRUCTURE 3" = 1'

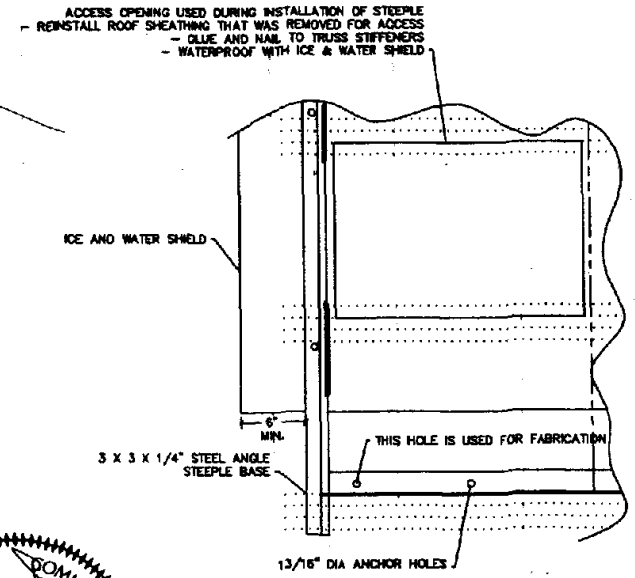

B STEEL BASE 1/2" = 1'

COMMONWEALTH OF VIRGINIA
JAMES PATTERSON
0402 036481
PROFESSIONAL ENGINEER
1/14/03

UNLESS OTHERWISE SPECIFIED DIMENSIONS ARE IN FEET & INCHES	LDS GMSR PROJECT
SCALE 1 1/2" = 1'	MUNNS MFG.
DRAWN BY R. KELLER	REV D
CHECKED BY R. NOORDA	DATE 9 JAN 03 · SAGE - B · SHEET 6 OF 6 · B