EXHIBIT 1

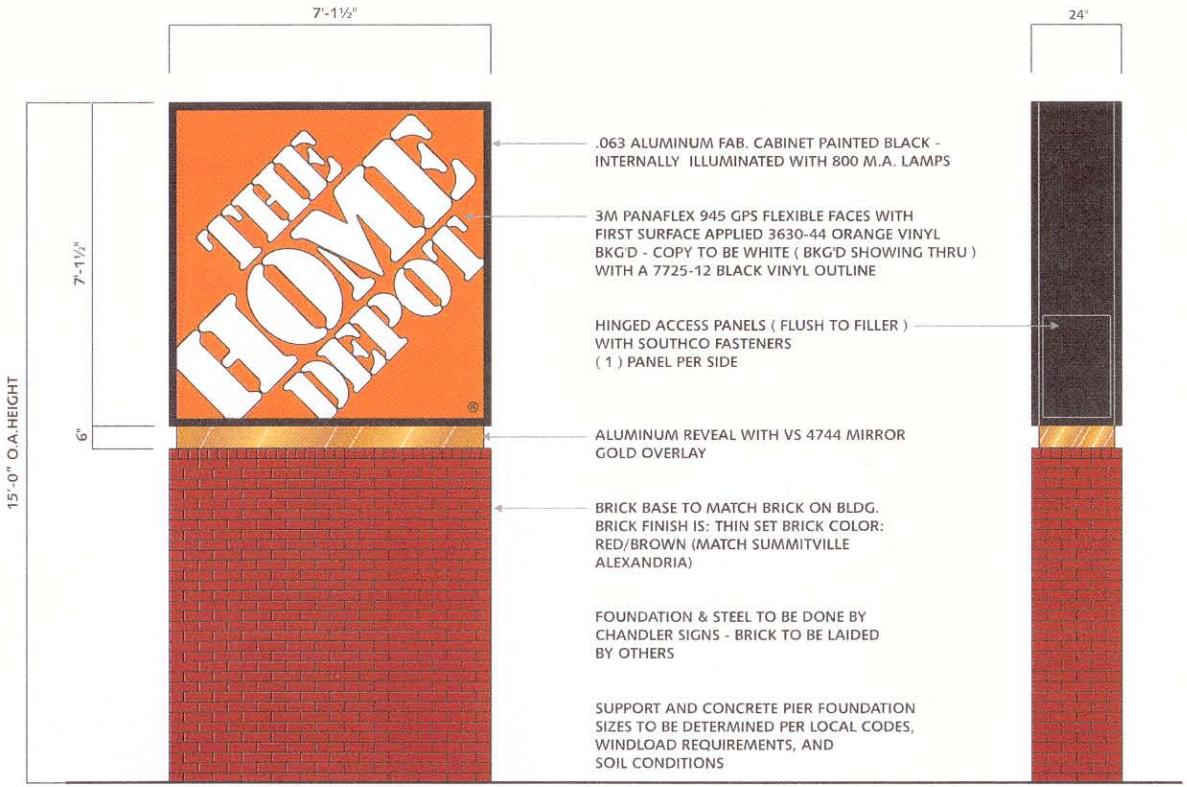

D/F MONUMENT SIGN 3/8"=1'-0"

END VIEW

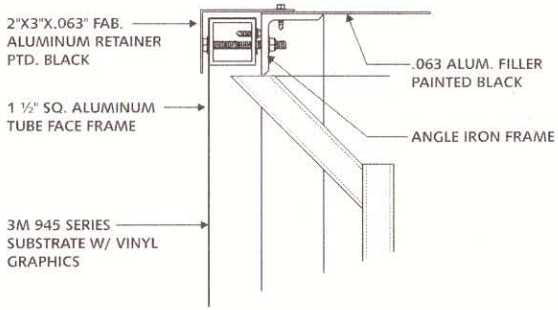

FACE RETENTION DETAIL 3"=1'-0"

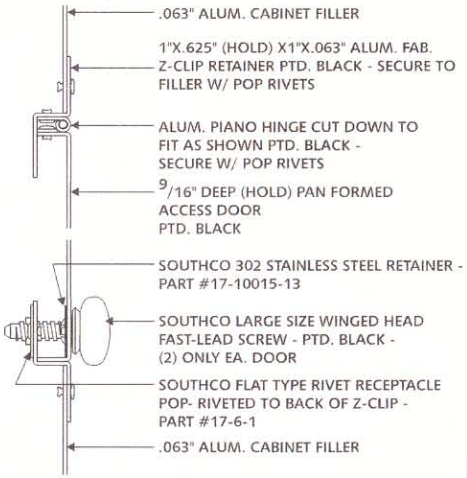

ACCESS PANEL DETAILS HALF SIZE

Chandler Signs
www.chandlersigns.com

3201 Manor Way, Dallas, TX 75235 — 214-902-2000, Fax 214-902-2044
12106 Valliant Drive, San Antonio, TX 78216 — 210-349-3804, Fax 210-349-8724
2420 Vista Way - Ste. 200, Oceanside, CA 92054 — 760-967-7003, Fax 760-967-7033
750 E. Hwy. 24 - Bldg. 2, Ste. 200, Woodland Park, CO 80863 — 719-687-2507, Fax 719-687-2506
16740 Hedgecroft - Ste. 400, Houston, TX 77060 — 281-931-9050, Fax 281-931-9011
P. O. Box 43123, Louisville, KY 40253 — 502-489-3660, Fax 502-254-3843

This drawing is the property of Chandler Signs, L.P. and all rights to its use for reproduction are reserved by Chandler Signs, L.P.

REVISION / DATE	APPROVAL / DATE
R1-9/22/03-LP-CHANGE TO BRICK BASE	Client
	Sales
	Estimating
	Art
	Engineering
	Landlord

Design # 03-2111	Sheet 1 of 1	Client	THE HOME DEPOT
Sales/Coordinator	RON JOURNAGAN	Street	MOORETOWN RD.
Designer LP	Date 8-28-03	City, State	WILLIAMSBURG, VA