WETLANDS BOARD
REVISED
PERMIT # 10-08
DATE 3-9-10
VMRC10-0306 1 of 2

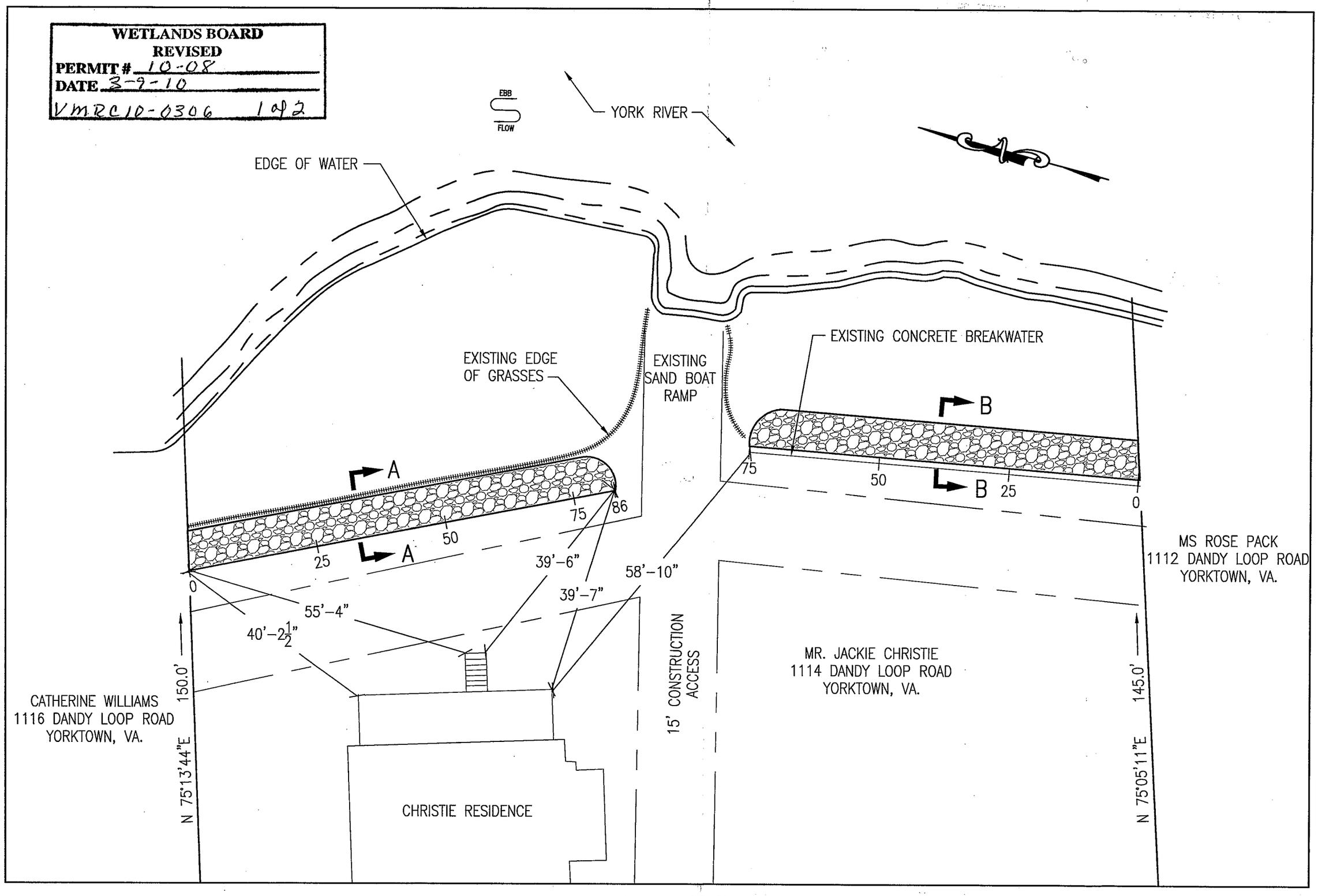

PLAN VIEW
SCALE: 1/16" = 1'-0"

No.	Revisions/Comments/Notes	Date

Custom Designed Piers & Bulkheads
Boat Houses, Lifts, Repairs
Licensed & Insured
VA Class A Contractor
ROYER
757-838-5900

MR. JACKIE CHRISTIE
1114 DANDY LOOP ROAD
YORKTOWN, VA. 23692

DRAWN BY	DESIGNED BY
RLB	MRB
SCALE	DATE
AS SHOWN	03/2010
FILE NO.	
PROPOSED	
SHEET NO.	
SHEET 1	

ANY MISUSE, REUSE, ALTERATIONS, ADDITIONS AND/OR DELETIONS OF THESE DRAWINGS ON PROJECT, PROJECT EXTENSIONS OR OTHER PROJECTS SHALL BE AT THE USER'S SOLE RISK AND WITHOUT LIABILITY TO ROYER TECHNICAL SERVICES, INC. IN THE EVENT THAT A CONFLICT ARISES BETWEEN THE SEALED DRAWINGS AND THE ELECTRONIC FILES, THE SEALED DRAWINGS WILL GOVERN.

ROYER
TECHNICAL SERVICES, INC.
HAMPTON, VA.

WETLANDS BOARD
REVISED
PERMIT # 10-08
DATE 3-9-10
VMRC 10-0306 2 of 2

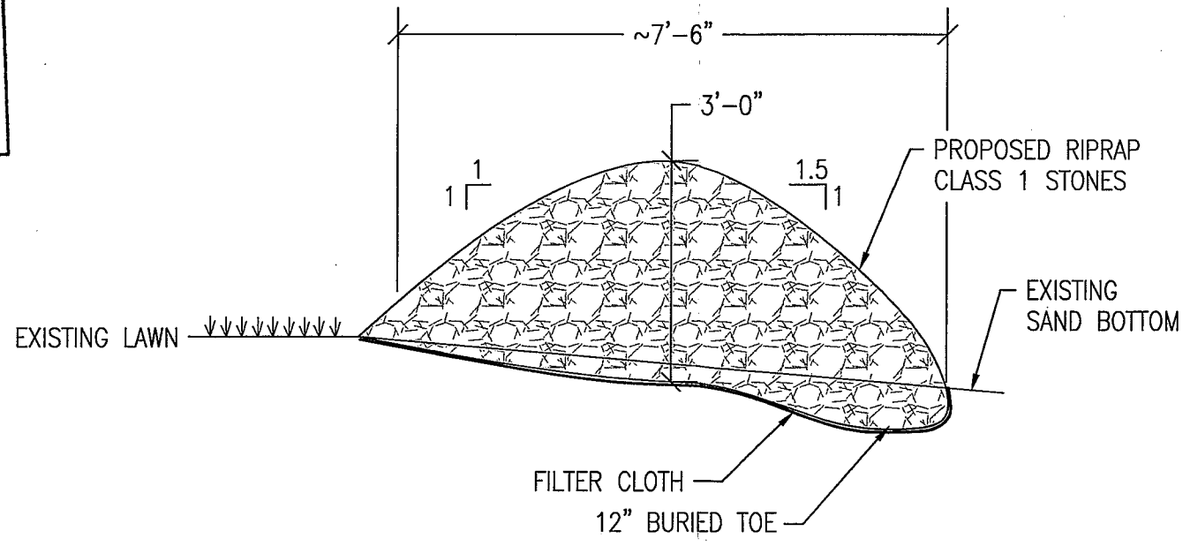

SECTION A-A

TYPICAL RIP-RAP BULKHEAD
CROSS-SECTION
SCALE: 1/2" =1'-0"

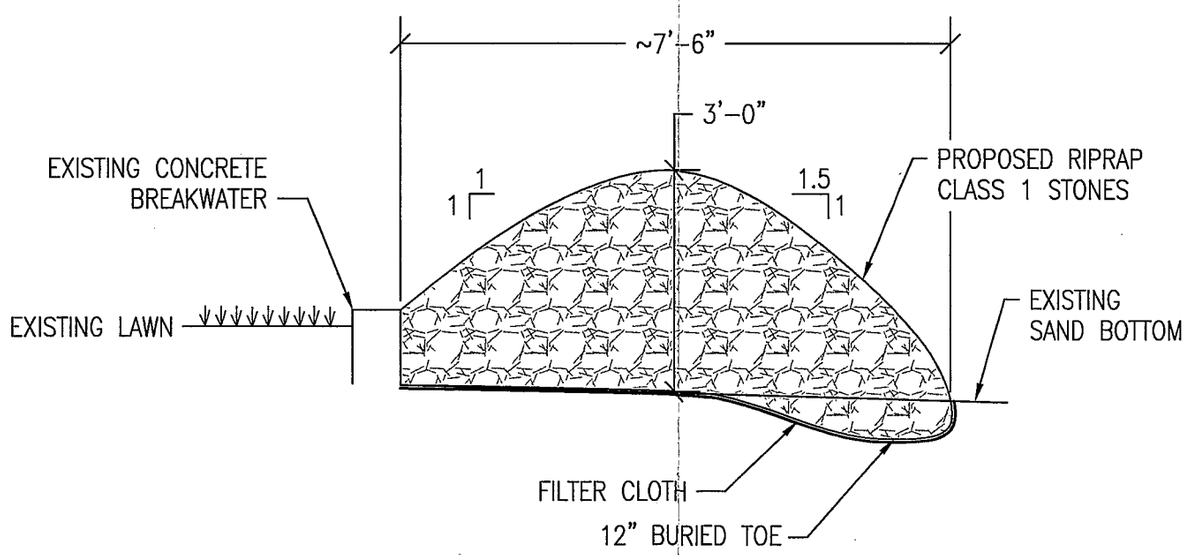

SECTION B-B

TYPICAL RIP-RAP BULKHEAD
CROSS-SECTION
SCALE: 1/2" =1'-0"

ANY MISUSE, REUSE, ALTERATIONS, ADDITIONS AND/OR DELETIONS OF THESE DRAWINGS OR PROJECT, PRODUCT EXTENSIONS OF OTHER PROJECTS SHALL BE AT THE USER'S SOLE RISK AND WITHOUT LIABILITY TO ROYER TECHNICAL SERVICES, INC. IN THE EVENT THAT A CONFLICT ARISES BETWEEN THE SCALED DIMENSIONS AND THE ELECTRONIC FILE, THE SCALED DIMENSIONS WILL GOVERN.

ROYER
TECHNICAL SERVICES, INC.
HAMPTON, VA.

No.	Revisions/Comments/Notes	Date

Custom Designed Piers & Boathouses
Boat Houses, Lifts, Repairs
Licensed & Insured
VA Class A Contractor
ROYER
757-838-5900

MR. JACKIE CHRISTIE
1114 DANDY LOOP ROAD
YORKTOWN, VA. 23692

DRAWN BY	DESIGNED BY
RLB	MRB
SCALE	DATE
AS SHOWN	03/2010
FILE NO.	
PROPOSED	
SHEET NO.	
SHEET 2	