March 1, 2010
Date

MEMORANDUM

TO: York County Wetlands Board

FROM: Virginia Marine Resources Commission, Habitat Management Division

SUBJECT: VMRC #10-0306 Jack Christie

The above-referenced application was e-mailed to your office on this date. There is a possibility that this project may involve wetlands. The Environmental Engineer responsible for your area has not yet seen this application and no determination has been made regarding its completeness. Please advise us of your determination in this matter and when a public hearing is scheduled if, in your judgment, wetlands are involved. You may also want to forward a copy of your response to the U.S. Army Corps of Engineers, Norfolk District, to advise them of your findings concerning this project.

Beth Howell
Division Office Manager

/blh
Attachment

_____
Date

MEMORANDUM

TO: Virginia Marine Resources Commission, Habitat Management Division

FROM: Wetlands Board Staff

Review of the above-referenced application indicates this project:

[ ] Does not involve wetlands. A letter will be forwarded to the applicant advising that no permit will be required from this Board.

[ ] Does involve wetlands and a permit will be required. A public hearing has been tentatively scheduled for _____ at _____.

[ ] Does involve wetlands but a permit will not be required because _____
_____.

[ ] Site inspection conducted on _____.

[ ] No site inspection conducted.

_____
Wetlands Board Staff Contact

Part 1 – General Information

PLEASE PRINT OR TYPE ALL RESPONSES: If a question does not apply to your project, please print N/A (not applicable) in the block or space provided. If additional space is needed, attach 8-1/2" x 11" sheets of paper.

County or City in which the project is located: YORK CO.
Waterway at project site: YORK RIVER

1. Applicant's name* and complete mailing address:
   MR. JACK CHRISTIE
   1114 DANDY LOOP RD
   YORKTOWN, VA 23692

   Contact Information:
   Home ( ) 898-9486
   Work ( )
   Fax ( )
   Cell/ Pager ( )
   e-mail

   State Corporation Commission ID Number (if appicable)

2. Property owner(s) name* and complete address, if different from applicant

   — SAME —

   Contact Information:
   Home ( )
   Work ( )
   Fax ( )
   Cell/ Pager ( )
   e-mail

   State Corporation Commission ID Number (if appicable)

3. Authorized agent name* and complete mailing address (if applicable):

   ROYER
   TECHNICAL SERVICES, INC.
   707 Howmet Drive, Suite A
   Hampton, VA 23661-1034

   Contact Information:
   Home ( )
   Work ( ) 838-5900
   Fax ( ) 838-7006
   Cell/ Pager ( ) 544-5650
   e-mail MAX@ROYERTEC.COM

   mission ID Number (if appicable) 2705 114031 A

*** If multiple applicants, property owners, and/or agents, each must be listed and each must sign the applicant signature page. If for a company, use the SCC registered name.**

4. Provide a detailed description of the project in the space below. If additional space is needed, provide a separate sheet of paper with the project description. Be sure to include how the construction site will be accessed, especially if clearing and/or grading will be required.

   TO INSTALL A RIP-RAP REVETMENT FOR PROPERTY AND SHORELINE STABILIZATION. APPROX. LENGTH 161'-0.

RECEIVED
FEB 25 2010
MARINE RESOURCES COMMISSION

FOR AGENCY USE ONLY	
	Notes:
	JPA # 10-0306

Part 1 - General Information (continued)

5. Have you obtained a contractor for the project? ✓ Yes* ___ No. *If your answer is "Yes" complete the remainder of this question and submit the Applicant's and Contractor's Acknowledgment Form (enclosed)

Contractor's name* and complete mailing address:

ROYER
TECHNICAL SERVICES, INC.
707 Howmet Drive, Suite A
Hampton, VA 23661-1034

Contact Information:
Home (___) _____
Work (___) 838 5900
Fax (___) 838 7006
Cell / Pager (___) 5445650
email MAXE ROYERTEC.COM

.mber (if appicable) 2705-114031-A

*** If multiple contractors, each must be listed and each must sign the applicant signature page. If for a company, use the SCC registered name.**

6. List the name, address and telephone number of the newspaper having general circulation in the area of the project. Failure to complete this question may delay local and State processing.

Name and complete mailing address:

DAILY PRESS
95 WARWICK BLVD.
NEWPORT NEWS, VA

Telephone number
(___) 247-4600

7. Give the following project location information:
Street Address (911 address if available) 1114 DANDY LOOP RD.
Lot/Block/Parcel# _____
Subdivision _____
City / County YORKTOWN, VA 23692

If the project is located in a rural area, please provide driving directions.

Note: if the project is in an undeveloped subdivision or property, clearly stake and identify property lines and location of the proposed project. A supplemental map showing how the property is to be subdivided should also be provided.

Part 1 - General Information (continued)

8. What is the primary and secondary purpose of the project? For example, the primary purpose may be "to protect property from erosion due to boat wakes" and the secondary purpose may be "to provide safer access to a pier."

   TO PROTECT FROM EROSION DUE TO STORMS & WAKES.

9. Proposed use (check one):
   ✓ Single user (private, non-commercial, residential)
   ___ Multi-user (community, commercial, industrial, government)

10. Describe the measures that will be taken to avoid and minimize impacts, to the maximum extent practicable, to wetlands, surface waters, submerged lands, and buffer areas associated with any disturbance (clearing, grading, excavating) during and after project construction.
    Please be advised that unavoidable losses of tidal wetlands and/or aquatic resources may require compensatory mitigation.

    CLEAN SAND FILL WILL BE BROUGHT IN TO REGRADE CONSTRUCTION ACCESS.

11. Have you previously had a site visit, applied to, or obtained a permit from any agency (Federal, State, or Local) for any portion of the project described in this application or any other project at the site?
    ___ Yes* ✓ No * If you answered "Yes", provide the following information:

Agency / Representative	Activity	Permit/Project No.	Action** & Date

(**Issued, Denied, Withdrawn, or Site Visit)

Part 1 - General Information (continued)

12. Is this application being submitted for after-the-fact authorization for work which has already begun or been completed? ___Yes ✓ No. If yes, be sure to clearly depict the portions of the project which are already complete in the project drawings.

13. Approximate cost of the entire project (materials, labor, etc.): $ 17,850
Approximate cost of that portion of the project which is below mean low water: $ NA

14. Completion date of the proposed work: APRIL 2010

15. Adjacent Property Owner Information: List the name and complete mailing address, including zip code, of each adjacent property owner to the project. (NOTE: a property owner/applicant cannot be their own adjacent property owner. You must give the next owner down the river, creek, etc).

(1) MS. ROSE PACK
1112 DANDY LOOP RD.
YORKTOWN, VA 23692

(2) MS. CATHERINE WILLIAMS
1116 DANDY LOOP RD.
YORKTOWN, VA 23692

Part 2 - Signatures

1. Applicants and property owners (if different from applicant).
NOTE: REQUIRED FOR ALL PROJECTS

PRIVACY ACT STATEMENT: The Department of the Army permit program is authorized by Section 10 of the Rivers and Harbors Act of 1899, Section 404 of the Clean Water Act, and Section 103 of the Marine Protection Research and Sanctuaries Act of 1972. These laws require that individuals obtain permits that authorize structures and work in or affecting navigable waters of the United States, the discharge of dredged or fill material into waters of the United States, and the transportation of dredged material for the purpose of dumping it into ocean waters prior to undertaking the activity. Information provided in the Joint Permit Application will be used in the permit review process and is a matter of public record once the application is filed. Disclosure of the requested information is voluntary, but it may not be possible to evaluate the permit application or to issue a permit if the information requested is not provided.

CERTIFICATION: I am hereby applying for all permits typically issued by the DEQ, VMRC, U.S. Army Corps of Engineers, and/or Local Wetlands Boards for the activities I have described herein. I agree to allow the duly authorized representatives of any regulatory or advisory agency to enter upon the premises of the project site at reasonable times to inspect and photograph site conditions, both in reviewing a proposal to issue a permit and after permit issuance to determine compliance with the permit.

In addition, I certify under penalty of law that this document and all attachments were prepared under my direction or supervision in accordance with a system designed to assure that qualified personnel properly gather and evaluate the information submitted. Based on my inquiry of the person or persons who manage the system or those persons directly responsible for gathering the information, the information submitted is, to the best of my knowledge and belief, true, accurate, and complete. I am aware that there are significant penalties for submitting false information, including the possibility of fine and imprisonment for knowing violations.

MR. JACK CHRISTIE
Applicant's Name (printed/typed) (Use if more than one applicant)

Jack Christie
Applicant's Signature (Use if more than one applicant)

2-20-2010
Date

—SAME—
Property Owner's Name (printed/typed) (Use if more than one owner)
(If different from Applicant)

Property Owner's Signature (Use if more than one owner)

Date

Part 2 – Signatures (continued)

2. Applicants having agents (if applicable)

CERTIFICATION OF AUTHORIZATION

I (we), JACK CHRISTIE, hereby certify that I (we) have authorized ROYER TECHNICAL SERVICES. INC
(Applicant's name(s)) (Agent's name(s)) (MAX R. BUZARD)
to act on my behalf and take all actions necessary to the processing, issuance and acceptance of this permit and any and all standard and special conditions attached.
We hereby certify that the information submitted in this application is true and accurate to the best of our knowledge.

MRB
(Agent's Signature)

(Use if more than one agent)

2/15/2010
(Date)

Jack Christie
(Applicant's Signature)

(Use if more than one applicant)

2-20-2010
(Date)

3. Applicant's having contractors (if applicable)

CONTRACTOR ACKNOWLEDGEMENT

I (we), JACK CHRISTIE, have contracted ROYER TECHNICAL SERVICES. INC
(Applicant's Name(s)) (Contractor's Name(s))
to perform the work described in this Joint Permit Application, signed and dated_____.

We will read and abide by all conditions set forth in all Federal, State and Local permits as required for this project. We understand that failure to follow the conditions of the permits may constitute a violation of applicable Federal, state and local statutes and that we will be liable for any civil and/or criminal penalties imposed by these statutes. In addition, we agree to make available a copy of any permit to any regulatory representative visiting the project to ensure permit compliance. If we fail to provide the applicable permit upon request, we understand that the representative will have the option of stopping our operation until it has been determined that we have a properly signed and executed permit and are in full complianc

ROYER TECHNICAL SERVICES, INC
Contractor's name or name of firm

ROYER
TECHNICAL SERVICES, INC.
707 Howmet Drive, Suite A
Hampton, VA 23661-1034
Contractor's

MRB VP
Contractor's signature and title

2705 11403 A
Contractor's License Number

Jack Christie
Applicant's signature

(use if more than one applicant)

2-20-2010
Date

Part 2 – Signatures (continued)

ADJACENT PROPERTY OWNER'S ACKNOWLEDGEMENT FORM

I (we), Rose Pack, own land next to (across
(Print adjacent/nearby property owner's name)

the water from/on the same cove as) the land of Jack Christie.
(Print applicant's name(s))

I have reviewed the applicant's project drawings dated 02/2010
(Date)

to be submitted for all necessary Federal, state and local permits.

I HAVE NO COMMENT_____ ABOUT THE PROJECT.

I DO NOT OBJECT RP. TO THE PROJECT.

I OBJECT _____ TO THE PROJECT.

The applicant has agreed to contact me for additional comments if the proposal changes prior to construction of the project.

(Before signing this form be sure you have checked the appropriate option above).

Rose Pack
Adjacent/nearby property owner's signature(s)

2/23/10
Date

Note: If you object to the proposal, the reason(s) you oppose the project must be submitted in writing to VMRC. An objection will not necessarily result in denial of the project; however, valid complaints will be given full consideration during the permit review process.

Part 2 – Signatures (continued)

ADJACENT PROPERTY OWNER'S ACKNOWLEDGEMENT FORM

I (we), Katherine H. Williams, own land next to (across
(Print adjacent/nearby property owner's name)

the water from/on the same cove as) the land of Jack Christie.
(Print applicant's name(s))

I have reviewed the applicant's project drawings dated 02/2010
(Date)

to be submitted for all necessary Federal, State and Local permits.

I HAVE NO COMMENT_____ ABOUT THE PROJECT.

I DO NOT OBJECT KHW TO THE PROJECT.

I OBJECT _____ TO THE PROJECT.

The applicant has agreed to contact me for additional comments if the proposal changes prior to construction of the project.

(Before signing this form, be sure you have checked the appropriate option above).

Katherine H. Williams
Adjacent/nearby property owner's signature(s)

2-23-10
Date

Note: If you object to the proposal, the reason(s) you oppose the project must be submitted in writing to VMRC. An objection will not necessarily result in denial of the project; however, valid complaints will be given full consideration during the permit review process.

Part 3 – Appendices (continued)

Appendix B: Projects for Shoreline Stabilization in tidal wetlands, tidal waters and dunes/beaches (including riprap revetments and associated backfill, marsh toe stabilization, bulkheads and associated backfill, breakwaters, beach nourishment, groins, jetties, etc). Answer all questions that apply. Please provide any reports provided from the Shoreline Erosion Advisory Service.

NOTE: Information on non-structural, vegetative alternatives (i.e. Living Shoreline) for shoreline stabilization is available at http://ccrm.vims.edu/coastal_zone/living_shorelines/index.html .

1. For **riprap, bulkheads, marsh toe, breakwaters, groins, jetties**: What is the overall length of the structure(s)? 161 linear feet. If applicable, what is the volume of the associated backfill? 0 cubic yards.

2. What is the maximum encroachment channelward of mean high water? 0 feet.
   channelward of mean low water? 0 feet.
   channelward of the back edge of the dune or beach? 0 feet.

3. Please calculate the square footage of encroachment over:
   - Vegetated wetlands 563 square feet
   - Nonvegetated wetlands _____ square feet
   - Subaqueous bottom _____ square feet
   - Dune and/or beach _____ square feet

4. For bulkheads, is any part of the project maintenance or replacement of a previously authorized, currently serviceable, existing structure? ____ Yes ____ No.

   NA

   If yes, will the construction of the new bulkhead be no further than two (2) feet channelward of the existing bulkhead? ____ Yes ____ No.

   If no, please provide an explanation for the purpose and need for the additional encroachment.

5. Describe the type of construction and **all** materials to be used, including source of backfill material, if applicable (e.g. vinyl sheet-pile bulkhead, timber stringers and butt piles, 100% sand backfill from upland source; broken concrete core material with Class II quarry stone armor over filter cloth). **NOTE: Drawings must include construction details, including dimensions, design and all materials, including fittings if used.**

   CLASS 1 STONE ARMOR OVER FILTER CLOTH.

6. If using stone, broken concrete, etc., for your structure(s), what is the average weight of the:
   Core (inner layer) material NA pounds per stone Class size _____
   Armor (outer layer) material 100 pounds per stone Class size 1

RECEIVED
FEB 25 2010
MARINE RESOURCES
COMMISSION

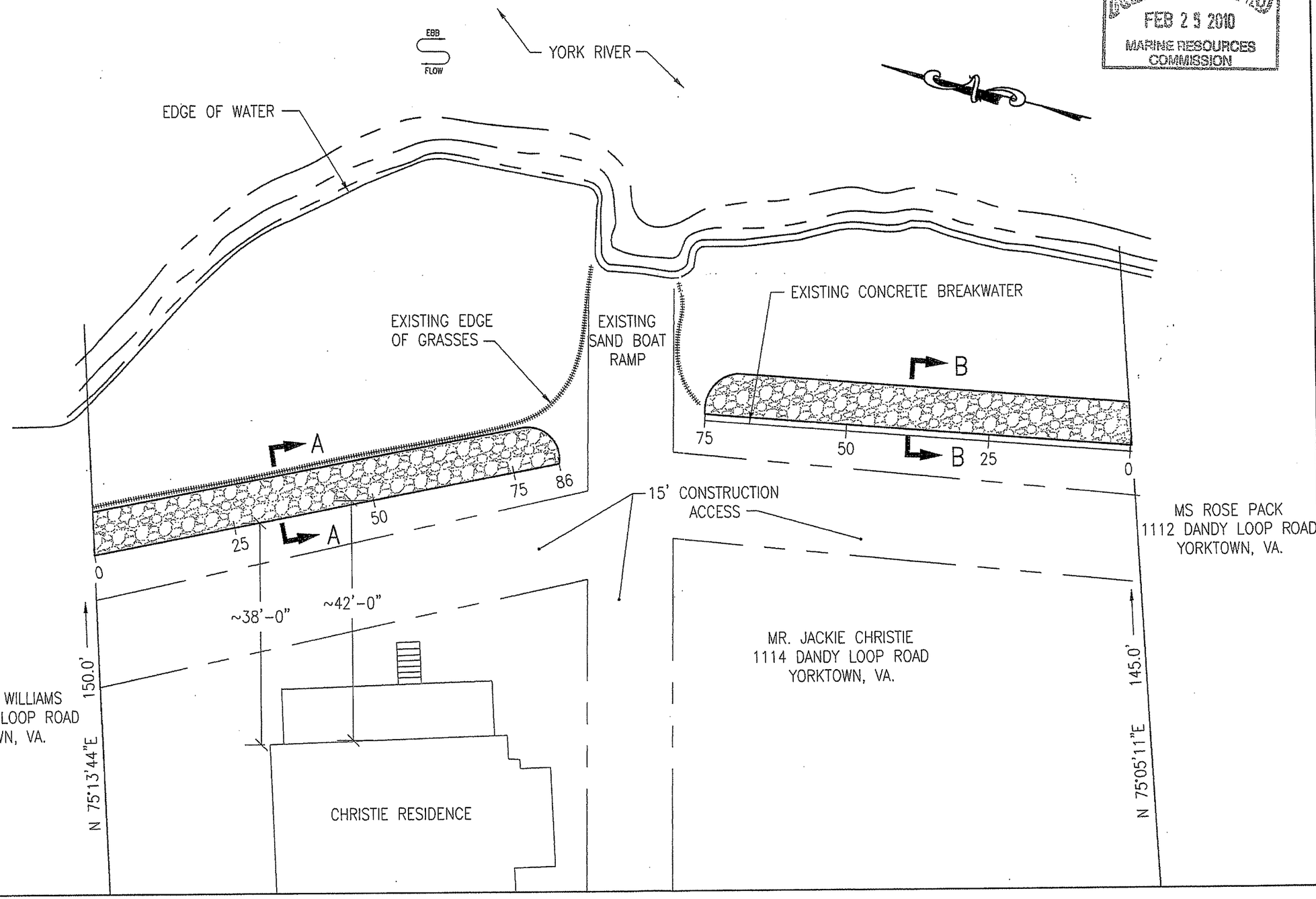

PLAN VIEW
SCALE: 1/16" = 1'-0"

No.	Revisions/Comments/Notes	Date

Custom Designed Plans & Building Permits
Boat Houses, Lifts, Repairs
Licensed & Insured
VA Class A Contractor
ROYER
757-838-5900

MR. JACKIE CHRISTIE
1114 DANDY LOOP ROAD
YORKTOWN, VA. 23692

DRAWN BY	DESIGNED BY
RLB	MRB
SCALE	DATE
AS SHOWN	02/2010
FILE NO.	
PROPOSED	
SHEET NO.	
SHEET 1	

ANY REUSE, REUSE, ALTERATIONS, ADDITIONS AND/OR REVISIONS OF THESE DRAWINGS ON PROJECT PROJECT EXTENSIONS OR OTHER PROJECTS SHALL BE AT THE USER'S SOLE RISK AND WITHOUT LIABILITY TO ROYER TECHNICAL SERVICES, INC. ALL THE DATA, INFO & CONTENT ALREADY EXIST IN THE SEALED DRAWINGS AND THE ELECTRONIC FILES. THE SEALED DRAWINGS WILL GOVERN.

ROYER
TECHNICAL SERVICES, INC.
HAMPTON, VA.

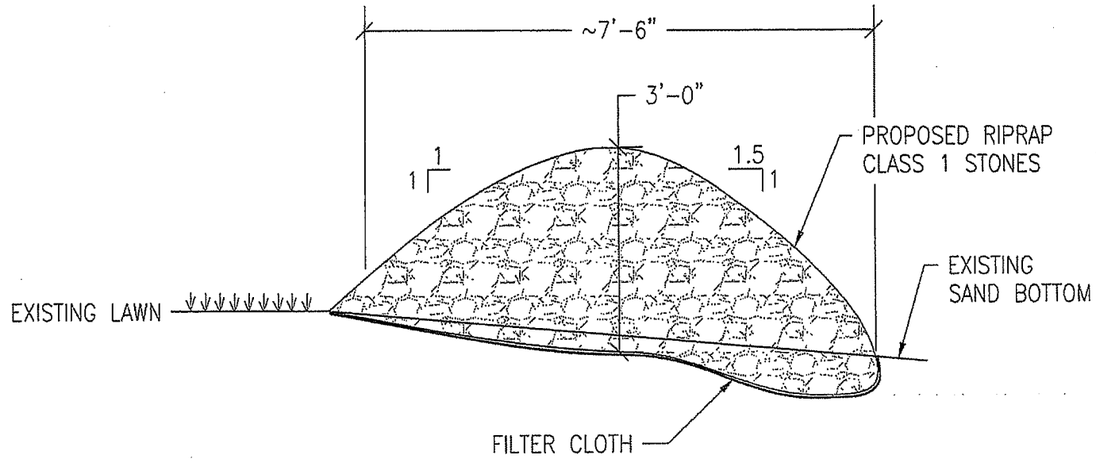

SECTION A-A

TYPICAL RIP-RAP BULKHEAD
CROSS-SECTION
SCALE: 1/2" =1'-0"

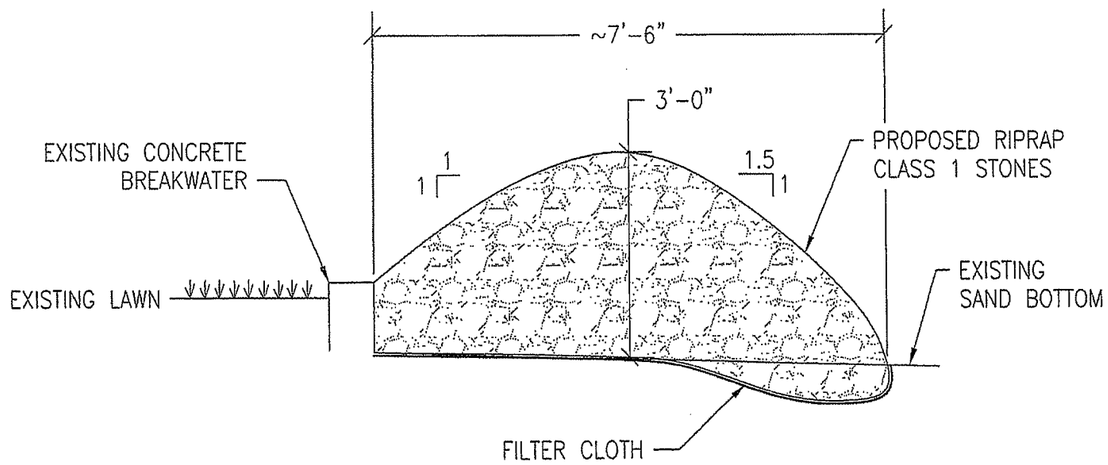

SECTION B-B

TYPICAL RIP-RAP BULKHEAD
CROSS-SECTION
SCALE: 1/2" =1'-0"

RECEIVED
FEB 25 2010
MARINE RESOURCES
COMMISSION

No.	Revisions/Comments/Notes	Date

Custom Designed Piers & Walkways
Boat Houses, Lifts, Repairs
Licensed & Insured
VA Class A Contractor
ROYER
757-838-5900

MR. JACKIE CHRISTIE
1114 DANDY LOOP ROAD
YORKTOWN, VA. 23692

DRAWN BY	DESIGNED BY
RLB	MRB
SCALE	DATE
AS SHOWN	02/2010
FILE NO.	
PROPOSED	
SHEET NO.	
SHEET 2	

ANY REUSE, REUSE, ALTERATIONS, ADDITIONS AND/OR DELETIONS OF THESE DRAWINGS OR PROJECT, PRODUCT DATABASES OR OTHER PROJECTS SHALL BE AT THE USER'S SOLE RISK AND WITHOUT LIABILITY TO ROYER TECHNICAL SERVICES INC. IN THE EVENT THAT A CONFLICT ARISES BETWEEN THE SEALED DRAWINGS AND THE ELECTRONIC FILES, THE SEALED DRAWINGS WILL GOVERN.

ROYER
TECHNICAL SERVICES, INC.
HAMPTON, VA.