WETLANDS BOARD
REVISED
PERMIT # 10-0306 / 10-08
DATE 3/23/10

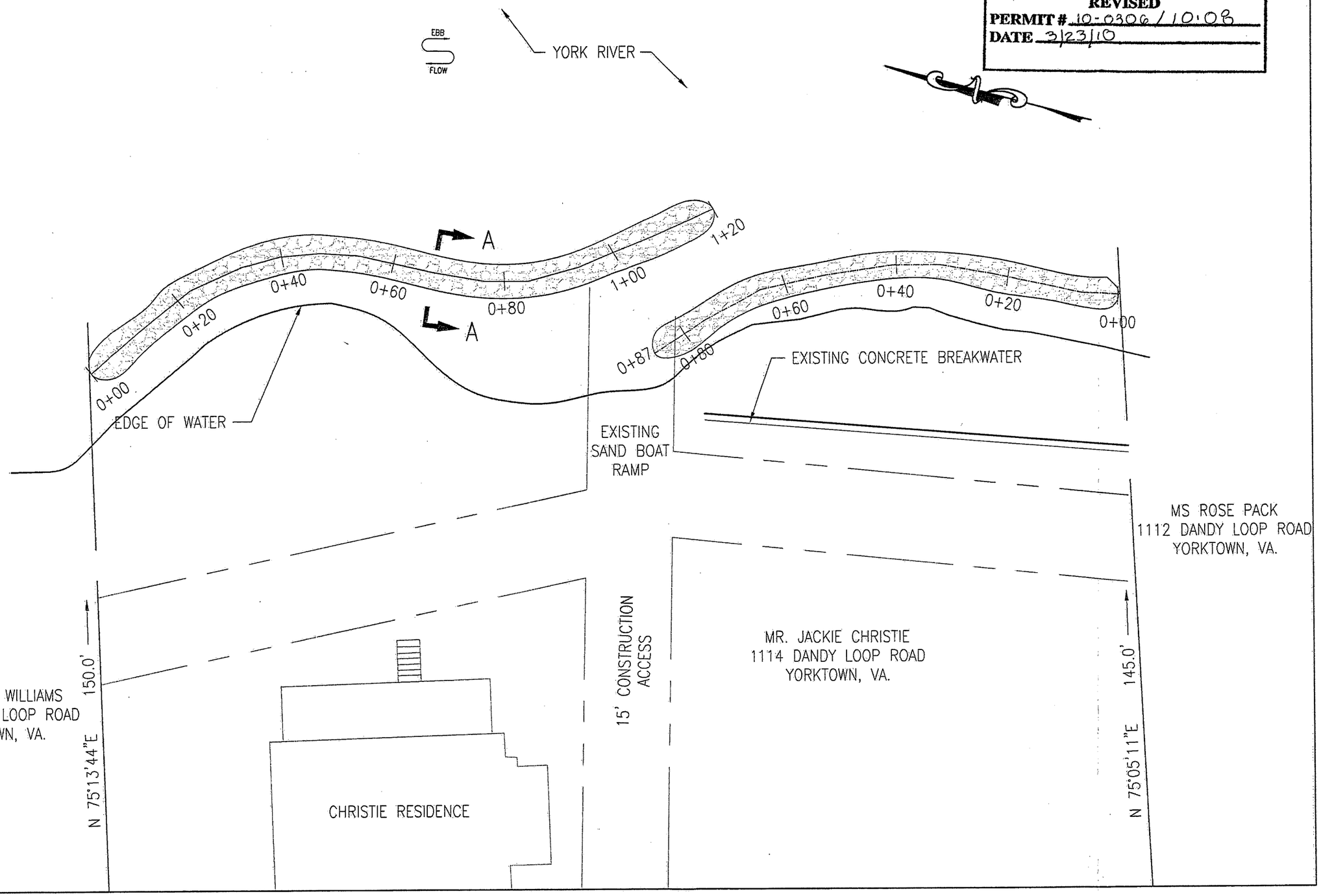

PLAN VIEW
SCALE: 1/16" = 1'-0"

ANY MISUSE, REUSE, ALTERATIONS, ADDITIONS AND/OR DELETIONS OF THESE DRAWINGS ON PROJECT, PROJECT EXTENSIONS OR OTHER PROJECTS SHALL BE AT THE USER'S SOLE RISK AND WITHOUT LIABILITY TO ROYER TECHNICAL SERVICES, INC. IN THE EVENT THAT A CONFLICT ARISES BETWEEN THE SEALED DRAWINGS AND THE ELECTRONIC FILES, THE SEALED DRAWINGS WILL GOVERN.

ROYER
TECHNICAL SERVICES, INC.
HAMPTON, VA.

No.	Revisions/Comments/Notes	Date

Custom Designed Piers & Bulkheads, Boat Houses, Lifts, Repairs
Licensed & Insured
Marine Contractor
ROYER
757-838-5900

MR. JACKIE CHRISTIE
1114 DANDY LOOP ROAD
YORKTOWN, VA. 23692

DRAWN BY	DESIGNED BY
RLB	MRB
SCALE	DATE
AS SHOWN	03/2010
FILE NO.	
PROPOSED	
SHEET NO.	
SHEET 1	

WETLANDS BOARD
REVISED
PERMIT # 10-0306/10-08
DATE 3/23/10

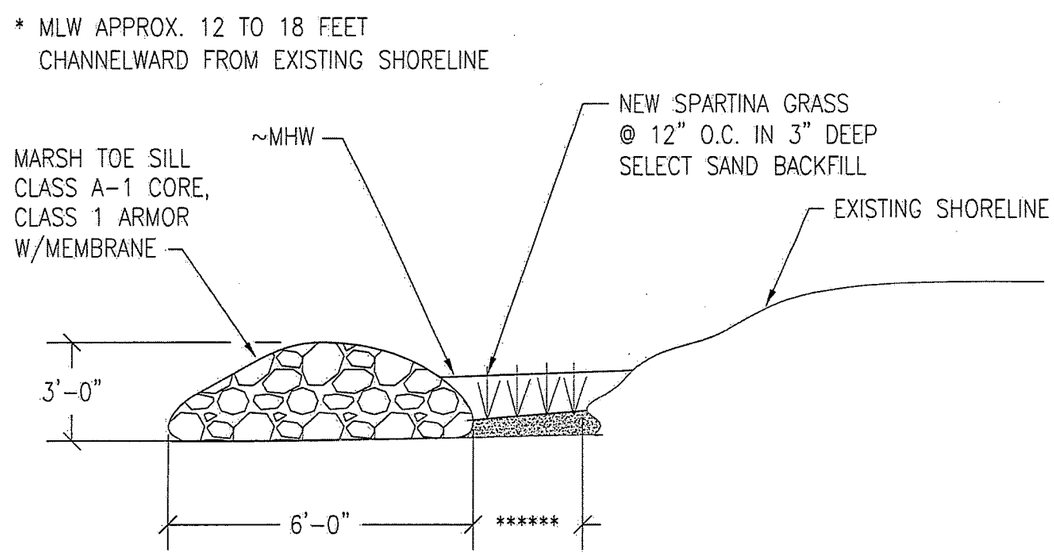

****** VARIES TO MEET MLW.

SECTION A-A
NOT TO SCALE

No.	Revisions/Comments/Notes	Date

Custom Designed Piers & Bulkheads
Boat Houses, Lifts, Repairs
Licensed & Insured
VA Class A Contractor
ROYER
757-838-5900

MR. JACKIE CHRISTIE
1114 DANDY LOOP ROAD
YORKTOWN, VA. 23692

DRAWN BY	DESIGNED BY
RLB	MRB
SCALE	DATE
AS SHOWN	03/2010
FILE NO.	
PROPOSED	
SHEET NO.	
SHEET 2	

ANY MISUSE, REUSE, ALTERATIONS, ADDITIONS AND/OR DELETIONS OF THESE DRAWINGS ON PROJECT, PROJECT EXTENSIONS OR OTHER PROJECTS SHALL BE AT THE USER'S SOLE RISK AND WITHOUT LIABILITY TO ROYER TECHNICAL SERVICES, INC. IN THE EVENT THAT A CONFLICT ARISES BETWEEN THE SEALED DRAWINGS AND THE ELECTRONIC FILES, THE SEALED DRAWINGS WILL GOVERN.

ROYER
TECHNICAL SERVICES, INC.
HAMPTON, VA.